ATEX-Servomotors

with Ex protection

Installation and operating instructions

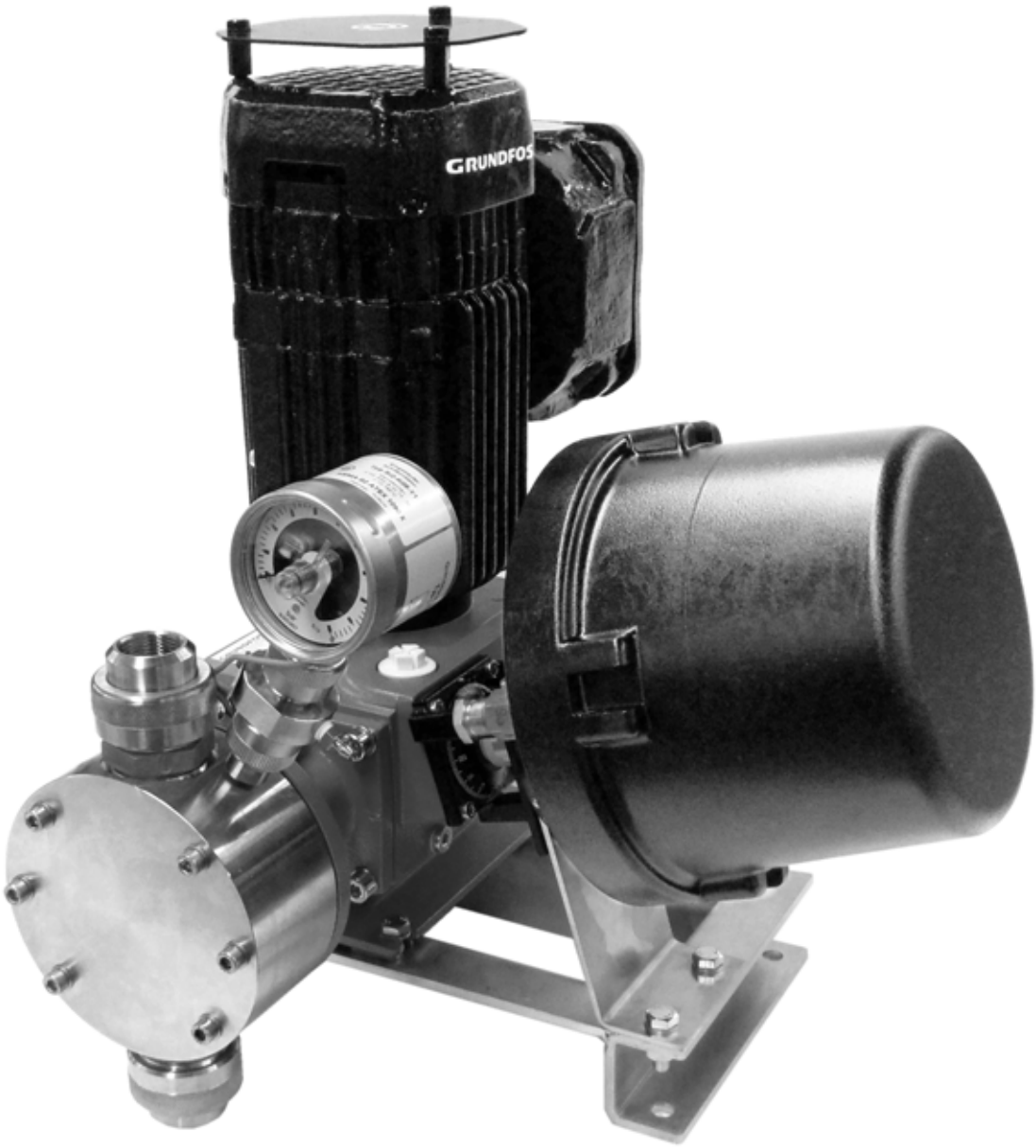

be
think
innovate

GRUNDFOS

Original installation and operating instructions

CONTENTS

		Page
1.	**General information**	**2**
1.1	Service documentation	2
1.2	Declaration according to ATEX GUIDELINES, 4TH EDITION - September 2012, concerning the assembling of pump and servomotor	2
2.	**Applications**	**2**
3.	**Safety**	**3**
3.1	Identification of safety instructions in this manual	3
3.2	Qualification and training of personnel	3
3.3	Risks when safety instructions are not observed	3
3.4	Safety-conscious working	3
3.5	Safety instructions for the operations manager/user	3
3.6	Safety instructions for installation, maintenance, and inspection work	3
3.7	Unauthorised modification and manufacture of spare parts	3
3.8	Improper operation	3
4.	**Technical data**	**4**
4.1	Versions, servomotor product numbers and corresponding pump types	4
4.2	General data	4
4.3	Electrical data	4
4.4	Dimensional sketches	4
5.	**Transport and storage**	**5**
5.1	Unpacking	5
5.2	Storage	5
6.	**Installation**	**5**
6.1	General information	5
6.2	Mounting	5
6.3	Earthing	7
6.4	Electrical connections	7
7.	**Commissioning**	**8**
7.1	Checks before start-up	8
8.	**Operation**	**8**
8.1	Automatic operation	8
8.2	Manual stroke-length adjustment	8
8.3	Configuration of the servomotor	8
9.	**Maintenance**	**9**
9.1	Cleaning	9
10.	**Disposal**	**9**

Warning

These installation and operating instructions are also available on www.grundfos.com.

Prior to installation, read these installation and operating instructions and the servomotor manufacturer's instructions. Installation and operation must comply with local regulations and accepted codes of good practice.

1. General information

These installation and operating instructions describe additional conditions or special considerations for the operation of pumps with electric servomotor for ATEX DMH pumps.

These installation and operating instructions are required in addition to the servomotor manufacturer's instructions supplied with the servomotor.

If you require further information or if any problems arise, which are not described in detail in this manual, please contact the nearest Grundfos company.

1.1 Service documentation

If you have any questions, please contact the nearest Grundfos company or service workshop.

1.2 Declaration according to ATEX GUIDELINES, 4TH EDITION - September 2012, concerning the assembling of pump and servomotor

Grundfos declares that there is no additional ignition hazard as a result of assembling the pump and servomotor. Pump assembled with servomotor is considered a combination of individual items of equipment in terms of explosion protection. Therefore, the manufacturer of the pump and the manufacturer of the electrical servomotor supply an EC declaration of conformity for each of both items.

2. Applications

Grundfos servomotors, series 384, are designed for automatic adjustment of the stroke length and consequently the dosing rate of the Grundfos dosing pumps described in this manual.

ATEX servomotors are suitable for ATEX DMH single-head pumps only.

Warning

Use the servomotor only for the specified pump types!

Caution

Other applications are not approved and not permitted. Grundfos cannot be held liable for any damage resulting from incorrect use.

3. Safety

This manual contains general instructions that must be observed during installation, operation and maintenance of the servomotor. This manual must therefore be read by the installation engineer and the relevant qualified personnel/operators prior to installation and start-up and must be available at the mounting location of the motor at all times.

For all work on the servomotor, observe the manufacturer's instructions supplied with the servomotor.

It is not only the general safety instructions given in this "Safety" section that must be observed, but also all the specific safety instructions given in the other sections.

3.1 Identification of safety instructions in this manual

If the safety instructions or other advice in this manual are not observed, it may result in personal injury or malfunction and damage to the servomotor. The safety instructions and other advice are identified by the following symbols:

Warning
If these safety instructions are not observed, it may result in personal injury!

Caution
If these safety instructions are not observed, it may result in malfunction or damage to the equipment!

Note
Notes or instructions that make the job easier and ensure safe operation.

Information provided directly on the servomotor must be maintained in a readable condition at all times.

3.2 Qualification and training of personnel

The personnel responsible for the installation, operation, maintenance and inspection must be appropriately qualified for these tasks. Areas of responsibility, levels of authority and the supervision of the personnel must be precisely defined by the operations manager.

If the personnel do not have the necessary knowledge, the necessary training and instruction must be given. It is the responsibility of the operations manager to make sure that the contents of this manual are understood by the personnel.

3.3 Risks when safety instructions are not observed

Non-observance of the safety instructions may have dangerous consequences for the personnel, the environment and the pump. If the safety instructions are not observed, all rights to claims for damages may be lost.

Non-observance of the safety instructions may lead to the following hazards:

- failure of important functions of the pump/system
- failure of specified methods for maintenance
- harm to humans from exposure to electrical, mechanical and chemical influences
- damage to the environment from leakage of harmful substances.

3.4 Safety-conscious working

The safety instructions in this manual, applicable national health and safety regulations and any internal working, operating and safety instructions specified by the operations manager must be observed.

3.5 Safety instructions for the operations manager/ user

Hazardous hot or cold parts on the servomotor must be protected to prevent accidental contact.

Damage caused by electrical energy must be prevented (for more details, see for example the regulations of the VDE and the local electricity supply company).

3.6 Safety instructions for installation, maintenance, and inspection work

The operations manager must ensure that all installation, maintenance and inspection work is carried out by authorised and qualified personnel, who have been adequately trained by reading this manual and the servomotor manufacturer's instructions.

All work on the servomotor should only be carried out when the servomotor is stopped.

All safety and protective equipment must be immediately restarted or put into operation once work is complete.

Warning
All work on the servomotor should be carried out in a non-explosive area or only if it can be proven that the area in which repairs are to be carried out is not a potentially explosive atmosphere.

Warning
Electrical connections must only be carried out by qualified personnel!
Repairs must only be carried out by authorised and qualified personnel!

Warning
When dosing dangerous media, observe the corresponding safety precautions!
Wear protective clothing (gloves and goggles), if necessary!
Before mounting the servomotor, switch off the pump, and disconnect it from the power supply!

3.7 Unauthorised modification and manufacture of spare parts

Modification or changes to the servomotor are only permitted following agreement with the manufacturer. Original spare parts and accessories authorised by the manufacturer are safe to use. Using other parts may result in liability for any resulting consequences.

3.8 Improper operation

The operational safety of the supplied servomotor is only ensured if it is used in accordance with section *4. Technical data*. The specified limit values must under no circumstances be exceeded.

4. Technical data

4.1 Versions, servomotor product numbers and corresponding pump types

A servomotor kit includes servomotor, console and mounting material. A spare servomotor is delivered without console and mounting material.

Servomotor	For pump type (single-head)	Pump type key, control variant	Servomotor kit with mounting console	Spare servomotor	Control variant	Supply voltage
384-511	DMH 251-253, DMH 280-281	D6	96624757	98711374	Current signal 4-20mA	115-230 V, 50/60 Hz
384-513	DMH 254-255, DMH 283-288		96624761	98711374		
384-514	DMH 257, DMH 285-288		96624765	98711374		

4.2 General data

- Permissible ambient temperature: 0 °C to +60 °C
- Permissible air humidity: max. relative humidity: 70 % at 40 °C, 90 % at 35 °C.
- Turning angle: 270 °
- Actuating time: 90 s
- Enclosure class: IP65
- Ex protection: Ex II2G Ex d IIC T6 Gb
- With mounting console

Feedback potentiometer versions

- Single potentiometer 1000 Ω

Electronics for current signal control

- Input for 4-20 mA current signal

4.3 Electrical data

Supply voltage	Rated current [A]	Power consumption [W]
115-230 V, 50/60 Hz	0.1-0.22	25

4.4 Dimensional sketches

4.4.1 Servomotor range 384-511 to 513

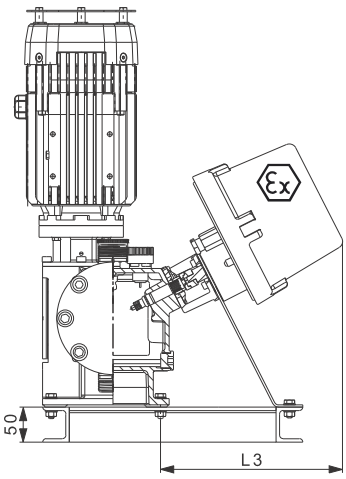

TM06 8501 1017

Fig. 1 Servomotor range 384-511 to 513

Servomotor range	L3
384-511, 115-230 V	297
384-512, 115-230 V	278
384-513, 115-230 V	273

Measurements in mm.

5. Transport and storage

Caution

Do not throw or drop the servomotor.

Do not use the protective packaging as transport packaging.

5.1 Unpacking

- Retain the packaging for future storage or return, or dispose of the packaging in accordance with local regulations.
- Mount the servomotor as soon as possible after unpacking.

5.2 Storage

Store the servomotor in a dry and cool place.

6. Installation

6.1 General information

Warning

The servomotor must be mounted by qualified personnel.

Warning

Tools meeting the requirements of EN 1127-1 Appendix A must be used for all operations on pumps in potentially explosive atmospheres.

There is a general ban on the use of any type of steel tool in Zone 1 if there is a risk of explosion due to materials in Explosion Group IIB and hydrogen sulphide, ethylene oxide or carbon monoxide.

Caution

The operator is responsible for setting up the system in accordance with the requirements of Directive 99/92/EC, taking into account the appropriate standards for its application.

Make sure you adhere to applicable national regulations when installing the system.

Warning

It is a basic fact that certain parts will carry a dangerous voltage whenever electrical devices are operated. Only electricians or trained persons instructed and supervised by a specialist electrician may carry out work on electrical installations or equipment and the relevant electrotechnical rules must be observed.

Warning

When undertaking installation, commissioning and testing work, all applicable safety and accident prevention regulations must always be observed.

Warning

Before you start any (installation) work of any kind on the drive, make sure that all affected machines/installations are switched off.

Caution

Do not use the position adjustment knob at the servomotor. When using the position adjustment knob, the min./max. position can be exceeded. Exceeding the min./max. position leads to destruction of the adjusting spindle and the sliding plug in the pump.

Note

It is essential that you read this instruction manual prior to carrying out installation and commissioning.

6.2 Mounting

Note

When the pump and servomotor are ordered together, the servomotor will be supplied fitted to the pump ready for connection.

6.2.1 Retrofitting a dosing pump with an electrical servomotor

Warning

When retrofitting a dosing pump with an electrical servomotor, you must observe the instructions and warnings contained in section *6.4 Electrical connections*, section *7. Commissioning* and section *8. Operation*.

- Carry out the electrical connections according to the servomotor manufacturer's instructions.

Scope of delivery of the electrical servomotor

Lantern, front plate, scale ring with screw, coupling (4 parts) with two grub screws, console, holding plate. Holding screws for console, holding plate, lantern and servomotor.

Required tools

Hexagon socket wrench 2 mm, 5 mm, wrench 13 mm

Checking the 0 % position

The servomotor is set to the 0 % position prior to delivery. However, for safety's sake this 0 % position must be checked and, if necessary, corrected.

For a servomotor with analogue control:

1. Connect the voltage supply according to the servomotor manufacturer's instructions.
2. Switch on the mains.
3. Apply 4 mA to "4-20 mA input".
4. The servomotor moves to the 0 % position.
5. Disconnect the mains and remove the mains cable.

For all servomotors:

1. Connect the pump to the electrical mains.
2. Switch on the mains.
3. Turn the pump's stroke adjustment button to the 0 % position.
4. Switch off the mains.

Removing the pump's front plate

1. Remove the cap from the adjustment button.
2. Remove the holding screw and pull the adjustment button straight out.
   – Make sure that you do not alter the 0 % position.
3. Remove the front plate.

Installation sketch for the electrical servomotor

Note Observe the installation and operating instructions for the dosing pump.

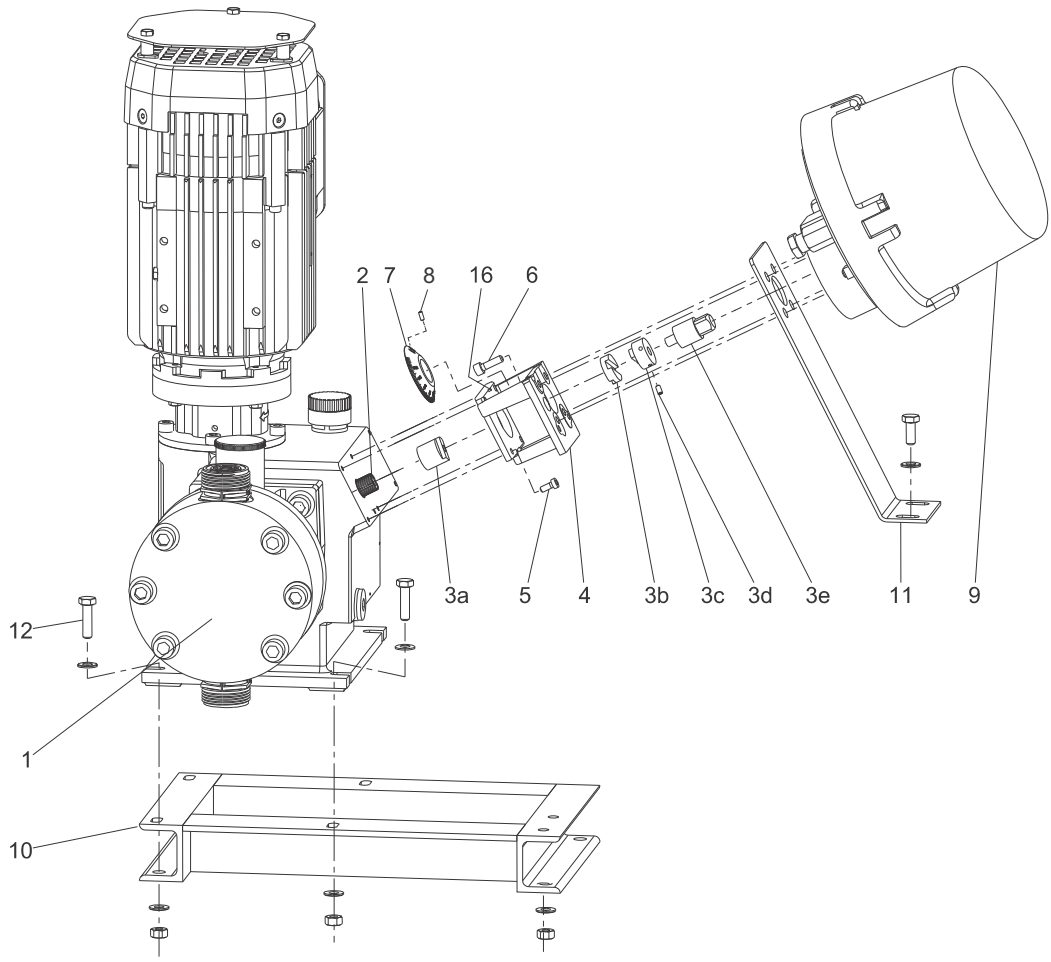

Fig. 2 Installing the servomotor

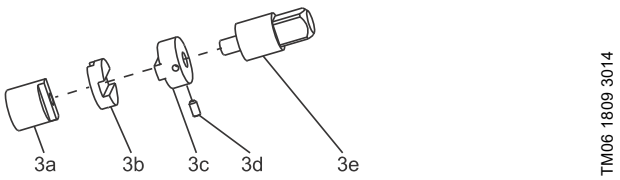

Fig. 3 Coupling

Item	Description
1	Pump
2	Adjusting spindle (grooved dowel)
3	Coupling
4	Lantern
5	Screw
6	Nut and intermediate disk
7	Scale ring
8	Grub screw
9	Servomotor
10	Console
11	Holding plate
12	Screw

Fitting the servomotor and lantern to the pump

1. Place the pump (1) on the console (10) and fix the screws (12) without fastening them.
2. Fit the coupling section (3a) onto the adjusting spindle (2).
3. Fit the lantern (4) using four screws (5).
4. Insert the scale ring (7) and coupling section (3b) (carrier) through the side of the lantern. Push one coupling section (3b) onto the other coupling section (3a) so it is in the correct position (see fig. 3) and hold it in place with one hand.

Caution The spindle must not rotate during this process.

5. Turn coupling section (3c) on the shaft so that it engages in the groove on coupling section (3b).
6. Fit coupling section (3e) onto coupling section (3c) and tighten slightly with the grub screw (3d).
7. Screw the holding plate (11) onto the console to place it tightly at the lantern.
8. Screw the servomotor (9) to the lantern and holding plate with the screws (6).
9. Tighten the grub screw (3d).
10. Match up the 0 % position of the scale ring (7) with the marking pin on the lantern and tighten the grub screw (8).
11. Tighten the screws (12) at the pump to fasten the pump to the console.

Connecting and commissioning the servomotor

Establish the electrical connections according to the servomotor manufacturer's instructions, see also section *6.4 Electrical connections*.

Commission the pump and servomotor, observing the information contained in the instruction manual; see also section *7. Commissioning*.

6.3 Earthing

Caution The servomotor must be earthed.

6.4 Electrical connections

Warning
Electrical connections may only be established by qualified staff.
Observe the servomotor manufacturer's instructions supplied with the servomotor.

Warning
Before opening housing, disconnect the servomotor from the power supply.
Observe the local safety regulations. Protect the cable connections and plugs from corrosion and moisture.

Warning
The applicable regulations must be observed when carrying out electrical installation and commissioning work. When undertaking electrical installation and commissioning work on explosion-protected equipment, the relevant national regulations on setting up electrical installations in potentially explosive areas need to be taken into account too.

Warning
Protective measures must be put in place in accordance with the relevant VDE guidelines and power supply company regulations. In particular, VDE guideline 0105, "Working on live installations", must be taken into account.

Warning
All elements, such as switch cams, switches, potentiometers, relays, etc., are wired at the factory. The internal wiring must never be modified.

Warning
The terminals at the limit switches are live when the switch closes.

Warning
The following must be taken into account for explosion-protection servomotors and pumps.
Danger of explosion!
Only use high-strength cable glands appropriate for the cable size.
Attach suitable caps to unused openings.

Caution Switch cams and limit switches are set at the factory and must not be modified.

Caution Before connecting the mains cable, check whether the type of current, the supply voltage and the frequency stated on the type plate match the local conditions.
An incorrect supply voltage may destroy the servomotor.

Caution To ensure electromagnetic compatibility (EMC), the signal cables must be shielded.
The screen must be connected on one side to PE (earth) or to the housing earth (earth terminal).
Lay signal and mains cables in separate cable channels.

Caution For parallel operation: If several drives are controlled via a shared contact, every drive must be equipped with a relay for parallel operation.

Note Lay the mains supply lines with cross-sections that conform to the relevant VDE guidelines.

Note Use separate, shielded lines for low voltages (e.g. potentiometers, analogue signals).

Note Use screwed cable joints appropriate for the connection line.
The stated degree of protection can only be ensured if suitable screwed cable joints are used.

- Carry out the electrical connections according to the servomotor manufacturer's instructions.

7. Commissioning

Caution: Before start-up, all components of the system must be ready for start-up.

Note: Observe the installation and operating instructions for the components used.

7.1 Checks before start-up

7.1.1 Checking the direction of rotation

The servomotor is controlled by an external controller. Therefore, the direction of rotation of the servomotor also depends on correct cabling and correct settings of the controller.

Note: Observe the installation and operating instructions for the controller and the dosing pump.

1. Switch on the dosing pump and the controller.
2. Switch the controller to manual operation.
3. Read the stroke-length value on the scale ring.
4. On the controller, increase the stroke length manually (in the "+" direction) for a few seconds.
5. Read the stroke-length value on the scale ring:
   – The stroke length has increased:
   Correct direction of rotation.
   – The stroke length has decreased:
   Wrong direction of rotation.
6. If the direction of rotation is wrong, check and correct cabling and controller settings. Repeat the check.
7. Switch the controller to automatic operation.

7.1.2 Adjusting the zero point

Note: Observe the installation and operating instructions for the dosing pump.

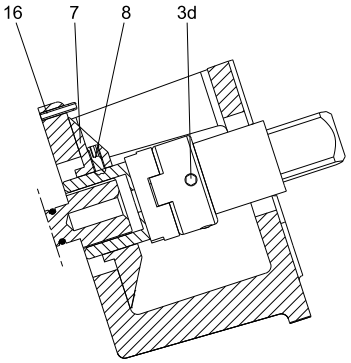

TM06 1810 3014

Fig. 4 Adjusting spindle with coupling

Depending on the counter-pressure of the pump, the zero point (no dosing) of the pump may be at a stroke length a little higher than 0 %. If a high precision is required, it may be necessary to adjust the zero point.

1. Switch the controller to manual operation.
2. On the controller, reduce the stroke length manually until the servomotor switches off automatically.
   For versions with 4-20 mA input, set the input signal to 4 mA.
3. Loosen the grub screw (3d) in the coupling, and turn the coupling clockwise until the pump stops dosing.
4. Re-tighten the grub screw (3d) in the coupling.
5. Loosen the grub screw (8) in the scale ring (7), and turn the scale ring so that "0" covers the marker pin (16) in the motor flange.
6. Re-tighten the grub screw (8) in the scale ring.
7. Switch the controller to automatic operation.

8. Operation

Caution: Do not use the position adjustment knob at the servomotor. When using the position adjustment knob, the min./max. position can be exceeded. Exceeding the min./max. position leads to destruction of the adjusting spindle and the sliding plug in the pump.

8.1 Automatic operation

Caution: Before setting the servomotor to automatic operation, check the min./max. position, the direction of rotation and adjust the zero point.

Note: During automatic operation, all functions are controlled by an external controller.
Observe the installation and operating instructions for the controller and the dosing pump.

8.2 Manual stroke-length adjustment

In case of faults of the servomotor or in the system, it may be necessary to adjust the stroke length manually, see the servomotor manufacturer's instructions.

When the fault has been corrected, switch the system back to automatic operation.

8.2.1 Manual operation

1. Separate the servomotor from the power supply.
2. Loosen the grub screw (3d) in the coupling (see fig. 4).
3. Turn the coupling by hand until the desired stroke length is reached.

Switching back to automatic operation

1. Turn the coupling so that "0 %" covers the marker pin (16) in the motor flange.
2. Connect the servomotor to the power supply.
3. Reduce the stroke length manually until the servomotor switches off automatically.
   For versions with 4-20 mA input, set the input signal to 4 mA.
   For versions with potentiometer set min. stroke length.
4. Tighten the grub screw (3d) in the coupling.
5. Switch the controller to automatic operation.

8.3 Configuration of the servomotor

For the configuration of the servomotor inputs and outputs and the setting of operating modes, see the servomotor manufacturer’s instructions.

9. Maintenance

Warning

Electrical connections may only be established by qualified staff.

Observe the servomotor manufacturer's instructions supplied with the servomotor.

Warning

Tools meeting the requirements of EN 1127-1 Appendix A must be used for all operations on pumps in potentially explosive atmospheres.

There is a general ban on the use of any type of steel tool in Zone 1 if there is a risk of explosion due to materials in Explosion Group IIB and hydrogen sulphide, ethylene oxide or carbon monoxide.

Warning

Switch off the entire system before making any repairs!

Switch off the power supply before opening the cover!

Warning

Risk of explosion due to overheating of the servomotor.

Prescribed maintenance operations must be carried out at regular intervals in order to ensure continued conformity with the requirements of Directive 2014/34/EU.

9.1 Cleaning

Caution

In order to prevent heat accumulating due to dust deposits on the servomotor, the servomotor must be cleaned at regular intervals.

It is the responsibility of the operator to set suitable intervals. Dust must not be allowed to accumulate > 2 mm.

10. Disposal

This product or parts of it must be disposed of in an environmentally sound way. Use appropriate waste collection services. If this is not possible, contact the nearest Grundfos company or service workshop.

The crossed-out wheelie bin symbol on a product means that it must be disposed of separately from household waste. When a product marked with this symbol reaches its end of life, take it to a collection point designated by the local waste disposal authorities. The separate collection and recycling of such products will help protect the environment and human health.

See also end-of-life information at www.grundfos.com/product-recycling.

Argentina
Bombas GRUNDFOS de Argentina S.A.
Ruta Panamericana km. 37.500 Centro Industrial Garin
1619 - Garin Pcia. de B.A.
Phone: +54-3327 414 444
Telefax: +54-3327 45 3190

Australia
GRUNDFOS Pumps Pty. Ltd.
P.O. Box 2040
Regency Park
South Australia 5942
Phone: +61-8-8461-4611
Telefax: +61-8-8340 0155

Austria
GRUNDFOS Pumpen Vertrieb Ges.m.b.H.
Grundfosstraße 2
A-5082 Grödig/Salzburg
Tel.: +43-6246-883-0
Telefax: +43-6246-883-30

Belgium
N.V. GRUNDFOS Bellux S.A.
Boomsesteenweg 81-83
B-2630 Aartselaar
Tél.: +32-3-870 7300
Télécopie: +32-3-870 7301

Belarus
Представительство ГРУНДФОС в Минске
220125, Минск
ул. Шафарнянская, 11, оф. 56, БЦ "Порт"
Тел.: +7 (375 17) 286 39 72/73
Факс: +7 (375 17) 286 39 71
E-mail: minsk@grundfos.com

Bosnia and Herzegovina
GRUNDFOS Sarajevo
Zmaja od Bosne 7-7A,
BH-71000 Sarajevo
Phone: +387 33 592 480
Telefax: +387 33 590 465
www.ba.grundfos.com
e-mail: grundfos@bih.net.ba

Brazil
BOMBAS GRUNDFOS DO BRASIL
Av. Humberto de Alencar Castelo Branco, 630
CEP 09850 - 300
São Bernardo do Campo - SP
Phone: +55-11 4393 5533
Telefax: +55-11 4343 5015

Bulgaria
Grundfos Bulgaria EOOD
Slatina District
Iztochna Tangenta street no. 100
BG - 1592 Sofia
Tel. +359 2 49 22 200
Fax. +359 2 49 22 201
email: bulgaria@grundfos.bg

Canada
GRUNDFOS Canada Inc.
2941 Brighton Road
Oakville, Ontario
L6H 6C9
Phone: +1-905 829 9533
Telefax: +1-905 829 9512

China
Grundfos Alldos
Dosing & Disinfection
ALLDOS (Shanghai) Water Technology Co. Ltd.
West Unit, 1 Floor, No. 2 Building (T 4-2)
278 Jinhu Road, Jin Qiao Export Processing Zone
Pudong New Area
Shanghai, 201206
Phone: +86 21 5055 1012
Telefax: +86 21 5032 0596
E-mail: grundfosalldos-CN@grundfos.com

China
GRUNDFOS Pumps (Shanghai) Co. Ltd.
10F The Hub, No. 33 Suhong Road
Minhang District
Shanghai 201106
PRC
Phone: +86-21 6122 5222
Telefax: +86-21 6122 5333

COLOMBIA
GRUNDFOS Colombia S.A.S.
Km 1.5 vía Siberia-Cota Conj. Potrero Chico,
Parque Empresarial Arcos de Cota Bod. 1A.
Cota, Cundinamarca
Phone: +57(1)-2913444
Telefax: +57(1)-8764586

Croatia
GRUNDFOS CROATIA d.o.o.
Buzinski prilaz 38, Buzin
HR-10010 Zagreb
Phone: +385 1 6595 400
Telefax: +385 1 6595 499
www.hr.grundfos.com

GRUNDFOS Sales Czechia and Slovakia s.r.o.
Čapkovského 21
779 00 Olomouc
Phone: +420-585-716 111

Denmark
GRUNDFOS DK A/S
Martin Bachs Vej 3
DK-8850 Bjerringbro
Tlf.: +45-87 50 50 50
Telefax: +45-87 50 51 51
E-mail: info_GDK@grundfos.com
www.grundfos.com/DK

Estonia
GRUNDFOS Pumps Eesti OÜ
Peterburi tee 92G
11415 Tallinn
Tel: + 372 606 1690
Fax: + 372 606 1691

Finland
OY GRUNDFOS Pumput AB
Trukkikuja 1
FI-01360 Vantaa
Phone: +358-(0)207 889 500

France
Pompes GRUNDFOS Distribution S.A.
Parc d'Activités de Chesnes
57, rue de Malacombe
F-38290 St. Quentin Fallavier (Lyon)
Tél.: +33-4 74 82 15 15
Télécopie: +33-4 74 94 10 51

Germany
GRUNDFOS Water Treatment GmbH
Reetzstraße 85
D-76327 Pfinztal (Söllingen)
Tel.: +49 7240 61-0
Telefax: +49 7240 61-177
E-mail: gwt@grundfos.com

Germany
GRUNDFOS GMBH
Schlüterstr. 33
40699 Erkrath
Tel.: +49-(0) 211 929 69-0
Telefax: +49-(0) 211 929 69-3799
E-mail: infoservice@grundfos.de
Service in Deutschland:
E-mail: kundendienst@grundfos.de

Greece
GRUNDFOS Hellas A.E.B.E.
20th km. Athinon-Markopoulou Av.
P.O. Box 71
GR-19002 Peania
Phone: +0030-210-66 83 400
Telefax: +0030-210-66 46 273

Hong Kong
GRUNDFOS Pumps (Hong Kong) Ltd.
Unit 1, Ground floor
Siu Wai Industrial Centre
29-33 Wing Hong Street &
68 King Lam Street, Cheung Sha Wan
Kowloon
Phone: +852-27861706 / 27861741
Telefax: +852-27858664

Hungary
GRUNDFOS Hungária Kft.
Tópark u. 8
H-2045 Törökbálint,
Phone: +36-23 511 110
Telefax: +36-23 511 111

India
GRUNDFOS Pumps India Private Limited
118 Old Mahabalipuram Road
Thoraipakkam
Chennai 600 097
Phone: +91-44 4596 6800

Indonesia
PT. GRUNDFOS POMPA
Graha Intirub Lt. 2 & 3
Jln. Cililitan Besar No.454. Makasar, Jakarta Timur
ID-Jakarta 13650
Phone: +62 21-469-51900
Telefax: +62 21-460 6910 / 460 6901

Ireland
GRUNDFOS (Ireland) Ltd.
Unit A, Merrywell Business Park
Ballymount Road Lower
Dublin 12
Phone: +353-1-4089 800
Telefax: +353-1-4089 830

Italy
GRUNDFOS Pompe Italia S.r.l.
Via Gran Sasso 4
I-20060 Truccazzano (Milano)
Tel.: +39-02-95838112
Telefax: +39-02-95309290 / 95838461

Japan
GRUNDFOS Pumps K.K.
1-2-3, Shin-Miyakoda, Kita-ku
Hamamatsu
431-2103 Japan
Phone: +81 53 428 4760
Telefax: +81 53 428 5005

Korea
GRUNDFOS Pumps Korea Ltd.
6th Floor, Aju Building 679-5
Yeoksam-dong, Kangnam-ku, 135-916
Seoul, Korea
Phone: +82-2-5317 600
Telefax: +82-2-5633 725

Latvia
SIA GRUNDFOS Pumps Latvia
Deglava biznesa centrs
Augusta Deglava ielā 60, LV-1035, Rīga,
Tālr.: + 371 714 9640, 7 149 641
Fakss: + 371 914 9646

Lithuania
GRUNDFOS Pumps UAB
Smolensko g. 6
LT-03201 Vilnius
Tel: + 370 52 395 430
Fax: + 370 52 395 431

Malaysia
GRUNDFOS Pumps Sdn. Bhd.
7 Jalan Peguam U1/25
Glenmarie Industrial Park
40150 Shah Alam
Selangor
Phone: +60-3-5569 2922
Telefax: +60-3-5569 2866

Mexico
Bombas GRUNDFOS de México S.A. de C.V.
Boulevard TLC No. 15
Parque Industrial Stiva Aeropuerto
Apodaca, N.L. 66600
Phone: +52-81-8144 4000
Telefax: +52-81-8144 4010

Netherlands
GRUNDFOS Netherlands
Veluwezoom 35
1326 AE Almere
Postbus 22015
1302 CA ALMERE
Tel.: +31-88-478 6336
Telefax: +31-88-478 6332
E-mail: info_gnl@grundfos.com

New Zealand
GRUNDFOS Pumps NZ Ltd.
17 Beatrice Tinsley Crescent
North Harbour Industrial Estate
Albany, Auckland
Phone: +64-9-415 3240
Telefax: +64-9-415 3250

Norway
GRUNDFOS Pumper A/S
Strømsveien 344
Postboks 235, Leirdal
N-1011 Oslo
Tlf.: +47-22 90 47 00
Telefax: +47-22 32 21 50

Poland
GRUNDFOS Pompy Sp. z o.o.
ul. Klonowa 23
Baranowo k. Poznania
PL-62-081 Przeźmierowo
Tel: (+48-61) 650 13 00
Fax: (+48-61) 650 13 50

Portugal
Bombas GRUNDFOS Portugal, S.A.
Rua Calvet de Magalhães, 241
Apartado 1079
P-2770-153 Paço de Arcos
Tel.: +351-21-440 76 00
Telefax: +351-21-440 76 90

Romania
GRUNDFOS Pompe România SRL
Bd. Biruintei, nr 103
Pantelimon county Ilfov
Phone: +40 21 200 4100
Telefax: +40 21 200 4101
E-mail: romania@grundfos.ro

Russia
ООО Грундфос Россия
ул. Школьная, 39-41
Москва, RU-109544, Russia
Тел. (+7) 495 564-88-00 (495) 737-30-00
Факс (+7) 495 564 8811
E-mail grundfos.moscow@grundfos.com

Serbia
Grundfos Srbija d.o.o.
Omladinskih brigada 90b
11070 Novi Beograd
Phone: +381 11 2258 740
Telefax: +381 11 2281 769
www.rs.grundfos.com

Singapore
GRUNDFOS (Singapore) Pte. Ltd.
25 Jalan Tukang
Singapore 619264
Phone: +65-6681 9688
Telefax: +65-6681 9689

Slovakia
GRUNDFOS s.r.o.
Prievozská 4D
821 09 BRATISLAVA
Phona: +421 2 5020 1426
sk.grundfos.com

Slovenia
GRUNDFOS LJUBLJANA, d.o.o.
Leskoškova 9e, 1122 Ljubljana
Phone: +386 (0) 1 568 06 10
Telefax: +386 (0)1 568 0619
E-mail: tehnika-si@grundfos.com

South Africa
Grundfos (PTY) Ltd.
16 Lascelles Drive, Meadowbrook Estate
1609 Germiston, Johannesburg
Tel.: (+27) 10 248 6000
Fax: (+27) 10 248 6002
E-mail: lgradidge@grundfos.com

Spain
Bombas GRUNDFOS España S.A.
Camino de la Fuentecilla, s/n
E-28110 Algete (Madrid)
Tel.: +34-91-848 8800
Telefax: +34-91-628 0465

Sweden
GRUNDFOS AB
Box 333 (Lunnagårdsgatan 6)
431 24 Mölndal
Tel.: +46 31 332 23 000
Telefax: +46 31 331 94 60

Switzerland
GRUNDFOS Pumpen AG
Bruggacherstrasse 10
CH-8117 Fällanden/ZH
Tel.: +41-44-806 8111
Telefax: +41-44-806 8115

Taiwan
GRUNDFOS Pumps (Taiwan) Ltd.
7 Floor, 219 Min-Chuan Road
Taichung, Taiwan, R.O.C.
Phone: +886-4-2305 0868
Telefax: +886-4-2305 0878

Thailand
GRUNDFOS (Thailand) Ltd.
92 Chaloem Phrakiat Rama 9 Road,
Dokmai, Pravej, Bangkok 10250
Phone: +66-2-725 8999
Telefax: +66-2-725 8998

Turkey
GRUNDFOS POMPA San. ve Tic. Ltd. Sti.
Gebze Organize Sanayi Bölgesi
Ihsan dede Caddesi,
2. yol 200. Sokak No. 204
41490 Gebze/ Kocaeli
Phone: +90 - 262-679 7979
Telefax: +90 - 262-679 7905
E-mail: satis@grundfos.com

Ukraine
Бізнес Центр Європа
Столичне шосе, 103
м. Київ, 03131, Україна
Телефон: (+38 044) 237 04 00
Факс.: (+38 044) 237 04 01
E-mail: ukraine@grundfos.com

United Arab Emirates
GRUNDFOS Gulf Distribution
P.O. Box 16768
Jebel Ali Free Zone
Dubai
Phone: +971-4- 8815 166
Telefax: +971-4-8815 136

United Kingdom
GRUNDFOS Pumps Ltd.
Grovebury Road
Leighton Buzzard/Beds. LU7 4TL
Phone: +44-1525-850000
Telefax: +44-1525-850011

U.S.A.
GRUNDFOS Pumps Corporation
9300 Loiret Blvd.
Lenexa, Kansas 66219
Phone: +1-913-227-3400
Telefax: +1-913-227-3500

Uzbekistan
Grundfos Tashkent, Uzbekistan The Representative Office of Grundfos Kazakhstan in Uzbekistan
38a, Oybek street, Tashkent
Телефон: (+998) 71 150 3290 / 71 150 3291
Факс: (+998) 71 150 3292

Addresses revised 15.01.2019

Trademarks displayed in this material, including but not limited to Grundfos, the Grundfos logo and "be think innovate" are registered trademarks owned by The Grundfos Group. All rights reserved. © 2019 Grundfos Holding A/S, all rights reserved.

99559296 0919
ECM: 1250494