Service Kit Catalogue

Dosing and disinfection

GRUNDFOS

Table of contents

1. Dosing and disinfection. 3
SMART Digital S. 3
SMART Digital XL. 6
DME 10
DDI 23
DMI. 30
DMH 34
DMX 40
Accessories for dosing pumps 46
Service tools for dosing pumps 48
Vaccuperm system 49
Oxiperm Pro OCD-162 53
Oxiperm system 57
Selcoperm system 62
Polydos 66
Measurement & control 67

1. Dosing and disinfection

SMART Digital S

DDA, DDC, DDE, up to 30 l/h, 1 x 100-240 V, 50/60 Hz

Service kits

Pump type	Valves	Materials			Kit description and product number				
		Dosing head	Gaskets	Valve balls	Valves + diaphragm pos. 1 + 2 + 3 + 7	Valves pos. 1 + 2	Diaphragm pos. 3	Complete dosing head pos. 1 + 2 + 3 + 4 + 5 + 6 + 7 + 8 + 9 + 10	
								Control variant [1]	
								B, P, A, AR	FC, FCM
DDE 6-10 DDC 6-10 DDC 9-7 DDA 7.5-16	Standard	PP	EPDM (E)	Ceramic (C)	97751427	97751599	97751707	97751104	97751116
			FKM (V)	Ceramic (C)	97751433	97751605	97751707	97751110	97751122
		PVC	EPDM (E)	Ceramic (C)	97751473	97751623	97751707	97751175	97751193
			FKM (V)	Ceramic (C)	97751479	97751629	97751707	97751181	97751199
			PTFE (T)	Ceramic (C)	97751485	97751635	97751707	97751187	97751205
		PVDF	EPDM (E)	Ceramic (C)	97751527	97751659	97751707	97751283	97751301
			FKM (V)	Ceramic (C)	97751533	97751665	97751707	97751289	97751307
			PTFE (T)	Ceramic (C)	97751539	97751671	97751707	97751295	97751313
		SS	PTFE (T)	Stainless steel (SS)	97751585	97751699	97751707	97751395	97751401
	Spring-loaded	PP	EPDM (E)	Ceramic (C)	97751428	97751600	97751707	97751105	97751117
			FKM (V)	Ceramic (C)	97751434	97751606	97751707	97751111	97751123
		PVC	EPDM (E)	Ceramic (C)	97751474	97751624	97751707	97751176	97751194
			FKM (V)	Ceramic (C)	97751480	97751630	97751707	97751182	97751200
			PTFE (T)	Ceramic (C)	97751486	97751636	97751707	97751188	97751206
		PVDF	EPDM (E)	Ceramic (C)	97751528	97751660	97751707	97751284	97751302
			FKM (V)	Ceramic (C)	97751534	97751666	97751707	97751290	97751308
			PTFE (T)	Ceramic (C)	97751540	97751672	97751707	97751296	97751314
		SS	PTFE (T)	Stainless steel (SS)	97751586	97751700	97751707	97751396	97751402
DDE 15-4 DDC 15-4 DDA 12-10 DDA 17-7	Standard	PP	EPDM (E)	Ceramic (C)	97751439	97751611	97751708	97751128	97751140
			FKM (V)	Ceramic (C)	97751445	97751617	97751708	97751134	97751146
		PVC	EPDM (E)	Ceramic (C)	97751491	97751641	97751708	97751211	97751229
			FKM (V)	Ceramic (C)	97751497	97751647	97751708	97751217	97751235
			PTFE (T)	Ceramic (C)	97751503	97751653	97751708	97751223	97751241
		PVDF	EPDM (E)	Ceramic (C)	97751545	97751677	97751708	97751319	97751337
			FKM (V)	Ceramic (C)	97751551	97751683	97751708	97751325	97751343
			PTFE (T)	Ceramic (C)	97751557	97751689	97751708	97751331	97751349
		SS	PTFE (T)	Stainless steel (SS)	97751591	97751705	97751708	97751407	97751413
	Spring-loaded	PP	EPDM (E)	Ceramic (C)	97751440	97751612	97751708	97751129	97751141
			FKM (V)	Ceramic (C)	97751446	97751618	97751708	97751135	97751147
		PVC	EPDM (E)	Ceramic (C)	97751492	97751642	97751708	97751212	97751230
			FKM (V)	Ceramic (C)	97751498	97751648	97751708	97751218	97751236
			PTFE (T)	Ceramic (C)	97751504	97751654	97751708	97751224	97751242
		PVDF	EPDM (E)	Ceramic (C)	97751546	97751678	97751708	97751320	97751338
			FKM (V)	Ceramic (C)	97751552	97751684	97751708	97751326	97751344
			PTFE (T)	Ceramic (C)	97751558	97751690	97751708	97751332	97751350
		SS	PTFE (T)	Stainless steel (SS)	97751592	97751706	97751708	97751408	97751414

Pump type	Valves	Materials			Kit description and product number				
		Dosing head	Gaskets	Valve balls	Valves + diaphragm pos. 1 + 2 + 3 + 7	Valves pos. 1 + 2	Diaphragm pos. 3	Complete dosing head pos. 1 + 2 + 3 + 4 + 5 + 6 + 7 + 8 + 9 + 10	
								Control variant [1]	
								B, P, A, AR	FC, FCM
DDA 30-4	Standard	PP	EPDM (E)	Ceramic (C)	97751461	97751611	97751709	97751151	97751163
			FKM (V)	Ceramic (C)	97751467	97751617	97751709	97751157	97751169
		PVC	EPDM (E)	Ceramic (C)	97751509	97751641	97751709	97751247	97751265
			FKM (V)	Ceramic (C)	97751515	97751647	97751709	97751253	97751271
			PTFE (T)	Ceramic (C)	97751521	97751653	97751709	97751259	97751277
		PVDF	EPDM (E)	Ceramic (C)	97751563	97751677	97751709	97751355	97751373
			FKM (V)	Ceramic (C)	97751569	97751683	97751709	97751361	97751379
			PTFE (T)	Ceramic (C)	97751575	97751689	97751709	97751367	97751385
		SS	PTFE (T)	Stainless steel (SS)	97751597	97751705	97751709	97751419	97751425
	Spring-loaded	PP	EPDM (E)	Ceramic (C)	97751462	97751612	97751709	97751152	97751164
			FKM (V)	Ceramic (C)	97751468	97751618	97751709	97751158	97751170
		PVC	EPDM (E)	Ceramic (C)	97751510	97751642	97751709	97751248	97751266
			FKM (V)	Ceramic (C)	97751516	97751648	97751709	97751254	97751272
			PTFE (T)	Ceramic (C)	97751522	97751654	97751709	97751260	97751278
		PVDF	EPDM (E)	Ceramic (C)	97751564	97751678	97751709	97751356	97751374
			FKM (V)	Ceramic (C)	97751570	97751684	97751709	97751362	97751380
			PTFE (T)	Ceramic (C)	97751576	97751690	97751709	97751368	97751386
		SS	PTFE (T)	Stainless steel (SS)	97751598	97751706	97751709	97751420	97751426

[1] The dosing heads of DDA control variants FC and FCM are equipped with a pressure sensor.

Control cube (only DDA and DDC)

Pos.	Description	Kit No
12	Screws, plugs	97790966
13	Display cover	97790958

Deaeration valve

Pos.	Materials		Kit No
	Valve body	Gasket	
9	PP	EPDM (E)	97790986
		FKM (V)	97790987
	PVC	EPDM (E)	97790988
		FKM (V)	97790989
	PVDF	EPDM (E)	97790990
		FKM (V)	97790991

Dosing head cover

Pos.	Description	Type	Kit No
8	DDA, DDC, DDE up to 17l/h	PP	97790967
	DDA 30 l/h	SS	97790968

Mounting plate

Pos.	Description	Kit No
11	Mounting plate and screws	97790957

Power cable

Pos.	Country	Type	Kit No
14	EU	F	97790969
	USA	B	97790970
	Canada	B	97790970
	UK	G	97790981
	Australia	I	97790982
	New Zealand	I	97790982
	Taiwan	I	97790982
	Japan	J	97790984
	Switzerland	E	97790983
	Argentina	L	97790985

DDA, DDC, DDE, up to 17 l/h

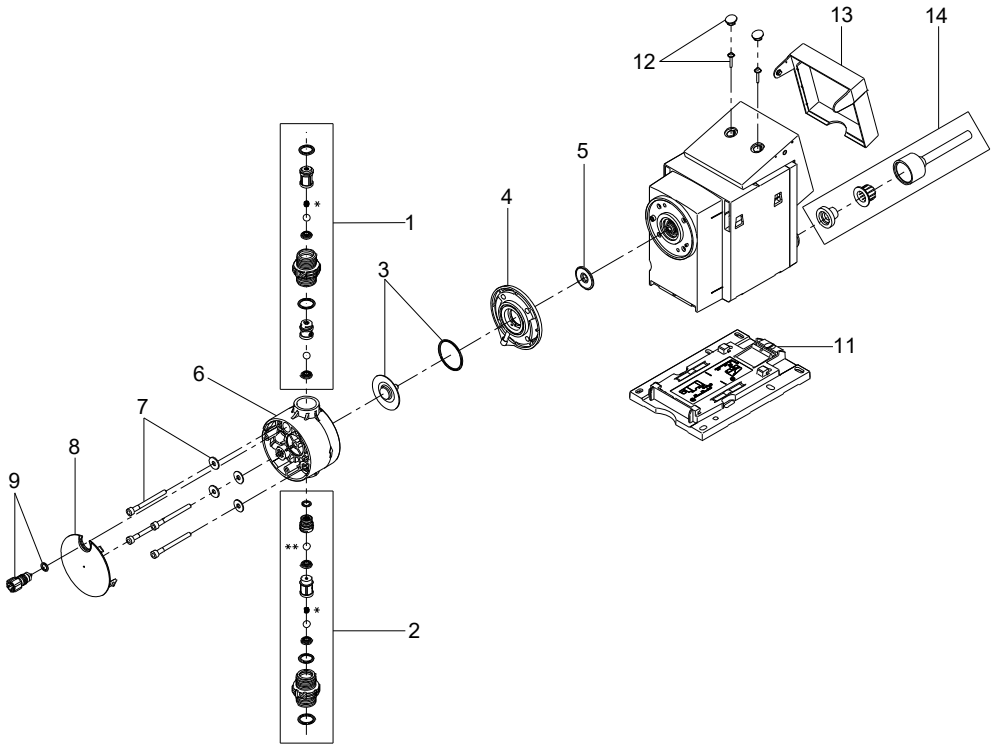

TM049566

DDA, 30 l/h

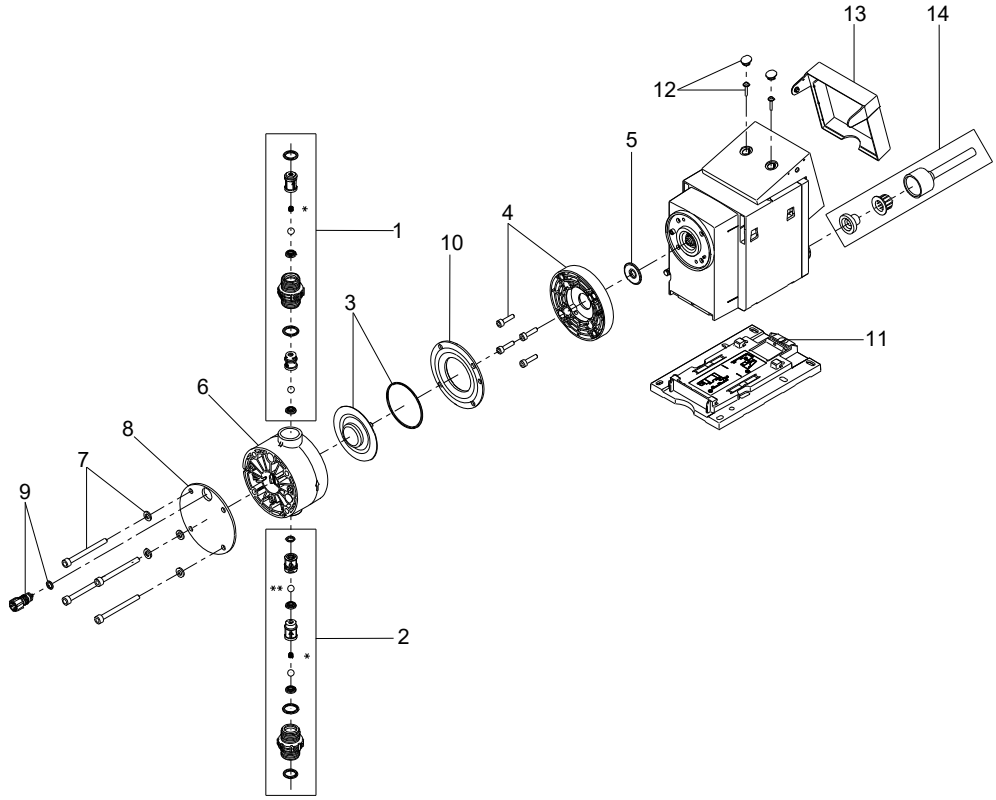

TM049565

* Only for spring-loaded valves.

**Not for spring-loaded valves.

SMART Digital XL

DDA, DDE, 60-200 l/h, 1 x 100-240 V, 50/60 Hz

Service kits

Pump type	Valves	Materials			Kit description and product number							
					Valves + diaphragm		Valve	Diaphragm		Complete dosing head		
					pos. 1 + 2 + 3 + 4 + 7		pos. 1 + 2	pos. 3 + 4		pos. 1 + 2 + 3 + 4 + 6 + 7 + 8 + 9 + 10		
										Control variant:		
		Head	Gasket	Valve ball	Standard	DLD [2]		Standard	DLD [2]	DDE-B, DDE-AR, DDA-AR	DDA-AR (DLD [2])	DDA-FCM [3]
DDA 60-10 DDE 60-10	Std	PVC	EPDM	Ceramic	99151275	99151299	99151369	99151383	99151384	99151389	99151431	99151474
			FKM	Ceramic	99151276	99151300	99151370	99151383	99151384	99151390	99151432	99151475
			PTFE	Ceramic	99151277	99151301	99151371	99151383	99151384	99151391	99151433	99151476
			PTFE	PTFE	99192660	99192764	99192788	99151383	99151384	99192796	99192820	99192844
		PVDF	EPDM	Ceramic	99151278	99151302	99151372	99151383	99151384	99151392	99151434	99151477
			FKM	Ceramic	99151279	99151303	99151373	99151383	99151384	99151393	99151435	99151478
			PTFE	Ceramic	99151280	99151304	99151374	99151383	99151384	99151394	99151436	99151479
			PTFE	PTFE	99192661	99192765	99192789	99151383	99151384	99192797	99192821	99192845 99422697 [4]
		SS	EPDM	SS	99192662	99192766	99192790	99151383	99151384	99192798	99192822	99192846
			FKM	SS	99192743	99192767	99192791	99151383	99151384	99192799	99192823	99192847
			PTFE	SS	99151281	99151305	99151375	99151383	99151384	99151395	99151437	99151480
	Spring loaded	PVC	EPDM	Ceramic	99151282	99151306	99151376	99151383	99151384	99151396	99151438	99151481
			FKM	Ceramic	99151293	99151307	99151377	99151383	99151384	99151397	99151439	99151482
			PTFE	Ceramic	99151294	99151308	99151378	99151383	99151384	99151398	99151440	99151483
			PTFE	PTFE	99192744	99192768	99192792	99151383	99151384	99192800	99192824	99192848
		PVDF	EPDM	Ceramic	99151295	99151309	99151379	99151383	99151384	99151399	99151441	99151484
			FKM	Ceramic	99151296	99151310	99151380	99151383	99151384	99151400	99151442	99151485
			PTFE	Ceramic	99151297	99151311	99151381	99151383	99151384	99151401	99151443	99151486
			PTFE	PTFE	99192745	99192769	99192793	99151383	99151384	99192801	99192825	99192849
		SS	EPDM	SS	99192746	99192770	99192794	99151383	99151384	99192802	99192826	99192850
			FKM	SS	99192747	99192771	99192795	99151383	99151384	99192803	99192827	99192851
			PTFE	SS	99151298	99151312	99151382	99151383	99151384	99151402	99151444	99151487
DDA 120-7 DDE 120-7	Std	PVC	EPDM	Ceramic	99151313	99151327	99151369	99151385	99151386	99151403	99151445	99151488
			FKM	Ceramic	99151314	99151328	99151370	99151385	99151386	99151404	99151446	99151489
			PTFE	Ceramic	99151315	99151329	99151371	99151385	99151386	99151405	99151447	99151490
			PTFE	PTFE	99192748	99192772	99192788	99151385	99151386	99192804	99192828	99192852
		PVDF	EPDM	Ceramic	99151316	99151330	99151372	99151385	99151386	99151406	99151448	99151491
			FKM	Ceramic	99151317	99151331	99151373	99151385	99151386	99151407	99151449	99151492
			PTFE	Ceramic	99151318	99151332	99151374	99151385	99151386	99151408	99151450	99151493
			PTFE	PTFE	99192749	99192773	99192789	99151385	99151386	99192805	99192829	99192853 99422699 [4]
		SS	EPDM	SS	99192750	99192774	99192790	99151385	99151386	99192806	99192830	99192854
			FKM	SS	99192751	99192775	99192791	99151385	99151386	99192807	99192831	99192855
			PTFE	SS	99151319	99151333	99151375	99151385	99151386	99151409	99151451	99151494
	Spring loaded	PVC	EPDM	Ceramic	99151320	99151334	99151376	99151385	99151386	99151410	99151452	99151495
			FKM	Ceramic	99151321	99151335	99151377	99151385	99151386	99151411	99151453	99151496
			PTFE	Ceramic	99151322	99151336	99151378	99151385	99151386	99151412	99151454	99151497
			PTFE	PTFE	99192752	99192776	99192792	99151385	99151386	99192808	99192832	99192856
		PVDF	EPDM	Ceramic	99151323	99151337	99151379	99151385	99151386	99151413	99151455	99151498
			FKM	Ceramic	99151324	99151338	99151380	99151385	99151386	99151414	99151456	99151499
			PTFE	Ceramic	99151325	99151339	99151381	99151385	99151386	99151415	99151457	99151500
			PTFE	PTFE	99192753	99192777	99192793	99151385	99151386	99192809	99192833	99192857
		SS	EPDM	SS	99192754	99192778	99192794	99151385	99151386	99192810	99192834	99192858
			FKM	SS	99192755	99192779	99192795	99151385	99151386	99192811	99192835	99192859
			PTFE	SS	99151326	99151340	99151382	99151385	99151386	99151416	99151458	99151501

Pump type	Valves	Materials: Head	Materials: Gasket	Materials: Valve ball	Kit description and product number: Valves + diaphragm, pos. 1 + 2 + 3 + 4 + 7: Standard	Valves + diaphragm, pos. 1 + 2 + 3 + 4 + 7: DLD [2]	Valve, pos. 1 + 2	Diaphragm, pos. 3 + 4: Standard	Diaphragm, pos. 3 + 4: DLD [2]	Complete dosing head, pos. 1 + 2 + 3 + 4 + 6 + 7 + 8 + 9 + 10, Control variant: DDE-B, DDE-AR, DDA-AR	Complete dosing head, pos. 1 + 2 + 3 + 4 + 6 + 7 + 8 + 9 + 10, Control variant: DDA-AR (DLD [2])	Complete dosing head, pos. 1 + 2 + 3 + 4 + 6 + 7 + 8 + 9 + 10, Control variant: DDA-FCM [3]
DDA 200-4 DDE 200-4	Std	PVC	EPDM	Ceramic	99151341	99151355	99151369	99151387	99151388	99151417	99151459	99151502
			FKM	Ceramic	99151342	99151356	99151370	99151387	99151388	99151418	99151460	99151503
			PTFE	Ceramic	99151343	99151357	99151371	99151387	99151388	99151419	99151462	99151504
			PTFE	PTFE	99192756	99192780	99192788	99151387	99151388	99192812	99192836	99192860
		PVDF	EPDM	Ceramic	99151344	99151358	99151372	99151387	99151388	99151420	99151463	99151505
			FKM	Ceramic	99151345	99151359	99151373	99151387	99151388	99151421	99151464	99151506
			PTFE	Ceramic	99151346	99151360	99151374	99151387	99151388	99151422	99151465	99151507
			PTFE	PTFE	99192757	99192781	99192789	99151387	99151388	99192813	99192837	99192861 99422700 [4]
		SS	EPDM	SS	99192758	99192782	99192790	99151387	99151388	99192814	99192838	99192862
			FKM	SS	99192759	99192783	99192791	99151387	99151388	99192815	99192839	99192863
			PTFE	SS	99151347	99151361	99151375	99151387	99151388	99151423	99151466	99151508
	Spring loaded	PVC	EPDM	Ceramic	99151348	99151362	99151376	99151387	99151388	99151424	99151467	99151509
			FKM	Ceramic	99151349	99151363	99151377	99151387	99151388	99151425	99151468	99151510
			PTFE	Ceramic	99151350	99151364	99151378	99151387	99151388	99151426	99151469	99151511
			PTFE	PTFE	99192760	99192784	99192792	99151387	99151388	99192816	99192840	99192864
		PVDF	EPDM	Ceramic	99151351	99151365	99151379	99151387	99151388	99151427	99151470	99151512
			FKM	Ceramic	99151352	99151366	99151380	99151387	99151388	99151428	99151471	99151513
			PTFE	Ceramic	99151353	99151367	99151381	99151387	99151388	99151429	99151472	99151514
			PTFE	PTFE	99192761	99192785	99192793	99151387	99151388	99192817	99192841	99192865
		SS	EPDM	SS	99192762	99192786	99192794	99151387	99151388	99192818	99192842	99192866
			FKM	SS	99192763	99192787	99192795	99151387	99151388	99192819	99192843	99192867
			PTFE	SS	99151354	99151368	99151382	99151387	99151388	99151430	99151473	99151515

2) DLD = Diaphrame Leakage Detection.

3) The dosing head of DDA control variant FCM is equipped with a pressure sensor.

4) Kit only for pumps with Sapphire Pressure Sensor for fluoride containing media.

Std = Standard

SS = Stainless steel

Deaeration valve

NOTE: The replacement of the deaeration valve requires the tool kit Smart XL.

Pos.	Materials: Valve body	Materials: Gasket	Kit No.
9	PVC	EPDM	99580608
		FKM	99580609
	PVDF	EPDM	99580610
		FKM	99580611

Tool kit Smart XL

Description	Quantity	Kit no.
Tool Kit for Smart XL (3D printed tools, TORX PLUS 15 IP and 25 IP bits)	1	99396558

Mounting plate

Pos.	Description	Quantity	Kit no.
11	Mounting plate	1	99151552
12	Screw: Delta-PT 35x16	6	
18	Screw Cap	2	
19	Screw Delta-PT 50x22	2	
20	Washer	2	

Flange

Pos.	Description	Quantity	Kit no. Pump type: DDA 120-7 DDE 120-7	Kit no. Pump type: DDA 200-4 DDE 200-4
5	Pump head flange	1	99332869	99332870
7	Screw	4		
4	O-ring	1		

Cover set

Pos.	Description	Quantity	Kit no.
13	Cover for Cube	1	99517558
12	Cover for screw	2	
13a	Cover for plug	5	

Diaphragm Leakage Detection (DLD)

Pos.	Description	Quantity	Kit no.
15	Pressure switch and gasket	1	99185328

I/O board

Pos.	Description	Quantity	Kit No.		
			Control variant:		
			DDA-AR DDA-FCM	DDE-B	DDE-AR
17	I/O board	1	99332897	99332898	99332899
12	Screw	4			

Control cube

Pos.	Description	Quantity	Kit No.		
			Control variant:		
			DDA-AR DDA-FCM	DDE-B	DDE-AR
16	Control cube	1	99332894	99332895	99332896
12	Screw	2			
	Cover for screw	2			
3	O-ring	1			

Power cable

Pos.	Country	Type	Kit No.
14 14a	EU	F	99151545
	USA	B	99151546
	Canada	B	99151546
	UK	G	99151547
	Australia	I	99151548
	New Zealand	I	99151548
	Taiwan	I	99151548
	Japan	J	99151549
	Switzerland	E	99151550
	Argentina	L	99151551

Cover plate

Pos.	Pump type	Variant	Kit No.
8	DDA 60-10 DDE 60-10	without DLD	99529625
		with DLD	99529632
	DDA 120-7 DDE 120-7	without DLD	99529644
		with DLD	99529650
	DDA 200-4 DDE 200-4	without DLD	99529652
		with DLD	99529653

Screws

Pos.	Pump type	Dosing head material	Quantity	Kit No.
7	DDA 60-10 DDE 60-10	PVC, PVDF	12	99396530
	DDA 60-10 DDE 60-10	SS	12	99396531
	DDA 120-7 DDE 120-7 DDA 200-4 DDE 200-4	PVC, PVDF	12	99396532
	DDA 120-7 DDE 120-7 DDA 200-4 DDE 200-4	SS	12	99396553
12	All	All	24	99517706

Washer

Pos.	Description	Quantity	Kit No.
7	Washer	24	99540321

O-ring

Pos.	Description	Quantity	Kit No.
4	O-ring - EPDM	30	99517709
2	O-ring - FKM	20	99517744
	O-ring - PTFE/FKM	20	99517971
	O-ring - EPDM	20	99517983

DDA, DDE, 60 l/h

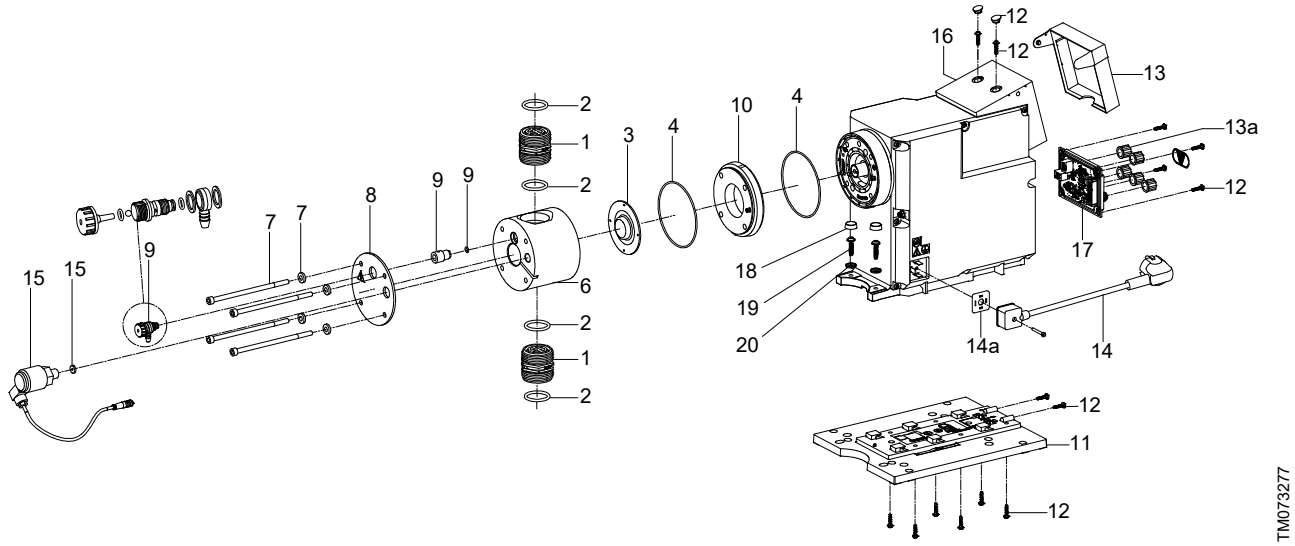

DDA, DDE, 120 - 200 l/h

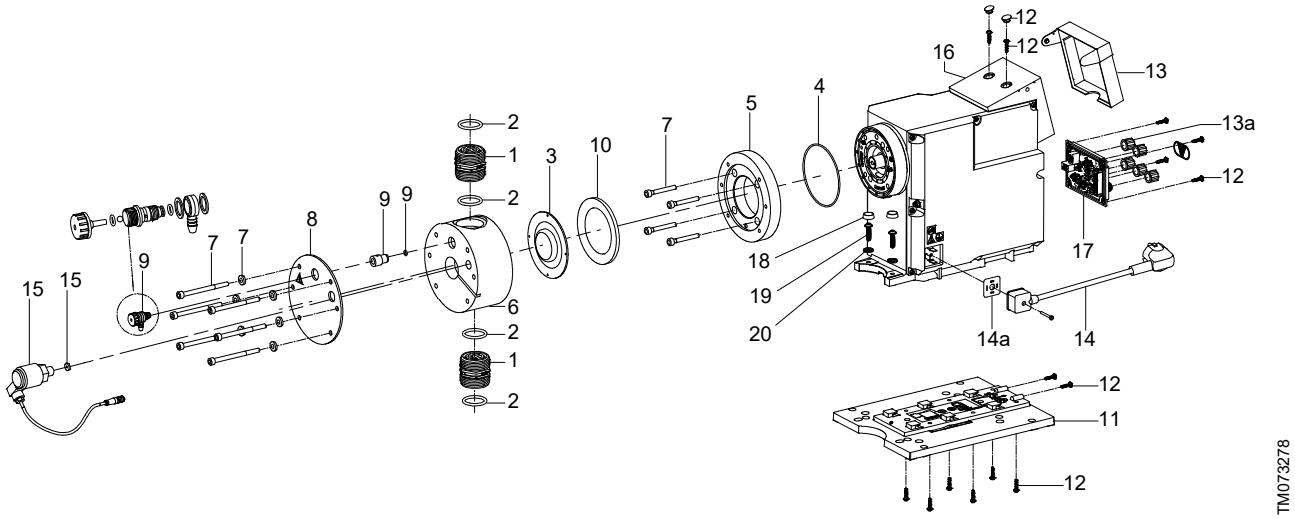

DME

DME 2 to 48 l/h, 1 x 100-240 V, 50/60 Hz

Pump	Valves	Materials	Product numbers			
			Complete dosing head pos. 1 + 2 + 3 (x2) + 4 + 5	Valves + diaphragm pos. 1 + 2 + 3 (x2)	Valves pos. 3 (x2)	Diaphragm pos. 2
DME 2-18 DMS 2-11	Standard	PP/EPDM/ceramic	-	96441131	96440711	96440740
		PP/FKM/ceramic	96446814	-	96446836	96440740
		PVDF/FKM/ceramic	96440667	96441133	96440713	96440740
		PVDF/PTFE/ceramic	-	-	96574015	96440740
		PVDF/PTFE/PTFE	-	-	96574016	96440740
		Stainless steel/FKM/stainless steel	-	-	96440723	96440740
	Spring-loaded	PP/EPDM/ceramic	-	96441132	96440712	96440740
		PP/FKM/ceramic	-	96446775	96446837	96440740
		PVDF/FKM/ceramic	96440668	-	96440722	96440740
		PVDF/PTFE/ceramic	-	-	-	96440740
		Stainless steel/FKM/stainless steel	-	-	-	96440740
DMS 4-7	Standard	PP/EPDM/ceramic	96440699	96441177	96440711	96440750
		PP/FKM/ceramic	-	96446782	96446836	96440750
		PVDF/FKM/ceramic	-	-	96440713	96440750
		PVDF/PTFE/ceramic	-	-	96574015	96440750
		PVDF/PTFE/PTFE	-	-	96574016	96440750
		Stainless steel/FKM/stainless steel	-	-	96440723	96440750
	Spring-loaded	PP/EPDM/ceramic	-	-	96440712	96440750
		PP/FKM/ceramic	-	-	96446837	96440750
		PVDF/FKM/ceramic	-	-	96440722	96440750
		PVDF/PTFE/ceramic	-	-	-	96440750
		Stainless steel/FKM/stainless steel	-	-	-	96440750
DME 8-10 DMS 8-5	Standard	PP/EPDM/ceramic	96440671	-	96440711	96440743
		PP/FKM/ceramic	96446816	-	96446836	96440743
		PVDF/FKM/ceramic	96440673	96441151	96440713	96440743
		PVDF/PTFE/ceramic	-	96636067	96574015	96440743
		PVDF/PTFE/PTFE	-	-	96574016	96440743
		Stainless steel/FKM/stainless steel	96440675	-	96440723	96440743
	Spring-loaded	PP/EPDM/ceramic	-	-	96440712	96440743
		PP/FKM/ceramic	-	96446781	96446837	96440743
		PVDF/FKM/ceramic	-	96441152	96440722	96440743
		PVDF/PTFE/ceramic	-	-	-	96440743
		Stainless steel/FKM/stainless steel	-	-	-	96440743
DME 12-6 DMS 12-3	Standard	PP/EPDM/ceramic	96440659	-	96440711	96440739
		PP/FKM/ceramic	96446812	96446772	96446836	96440739
		PVDF/FKM/ceramic	96440661	96441127	96440713	96440739
		PVDF/PTFE/ceramic	-	-	96574015	96440739
		PVDF/PTFE/PTFE	-	-	96574016	96440739
		Stainless steel/FKM/stainless steel	-	-	96440723	96440739
	Spring-loaded	PP/EPDM/ceramic	-	96441126	96440712	96440739
		PP/FKM/ceramic	96446813	-	96446837	96440739
		PVDF/FKM/ceramic	-	-	96440722	96440739
		PVDF/PTFE/ceramic	-	-	-	96440739
		Stainless steel/FKM/stainless steel	-	-	-	96440739

Pump	Valves	Materials	Product numbers			
			Complete dosing head pos. 1 + 2 + 3 (x2) + 4 + 5	Valves + diaphragm pos. 1 + 2 + 3 (x2)	Valves pos. 3 (x2)	Diaphragm pos. 2
DME 19-6	Standard	PP/EPDM/ceramic	96440647	96441137	96440711	96440741
		PP/FKM/ceramic	96446808	-	96446836	96440741
		PVDF/FKM/ceramic	96440649	96441139	96440713	96440741
		PVDF/PTFE/ceramic	96636091	96636072	96574015	96440741
		PVDF/PTFE/PTFE	-	-	96574016	96440741
		Stainless steel/FKM/stainless steel	96440651	-	96440723	96440741
	Spring-loaded	PP/EPDM/ceramic	96440648	-	96440712	96440741
		PP/FKM/ceramic	-	-	96446837	96440741
		PVDF/FKM/ceramic	-	-	96440722	96440741
		PVDF/PTFE/ceramic	-	-	-	96440741
		Stainless steel/FKM/stainless steel	-	-	-	96440741
DME 48-3	Standard	PP/EPDM/ceramic	96440653	-	96440711	96440742
		PP/FKM/ceramic	96446810	96446778	96446836	96440742
		PVDF/FKM/ceramic	96440655	-	96440713	96440742
		PVDF/PTFE/ceramic	96636095	-	96574015	96440742
		Stainless steel/FKM/stainless steel	-	-	96440723	96440742
	Spring-loaded	PP/EPDM/ceramic	-	-	96440712	96440742
		PP/FKM/ceramic	-	96446779	96446837	96440742
		PVDF/FKM/ceramic	96440656	-	96440722	96440742
		PVDF/PTFE/ceramic	-	-	-	96440742
		Stainless steel/FKM/stainless steel	-	-	-	96440742

DME 2 to 48 l/h

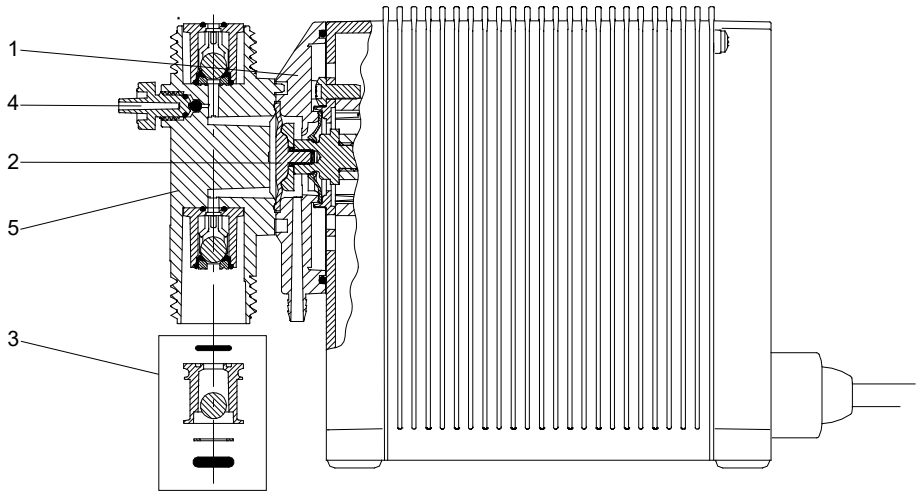

TM019976

Connection sets for DME (up to 48 l/h)

Info	Kit No
Connection type 3 M30 PP 4/6 mm	96440468
Connection type 3 M30 PVDF 4/6 mm	96440469
Connection type 3 M30 PP 6/9 mm	96440470
Connection type 3 M30 PVDF 6/9 mm	96440471
Connection type 3 M30 PP 9/12 mm	96440474
Connection type 3 M30 PVDF 9/12 mm	96440475

DME 60-940 l/h, 1 x 100-240 V, 50/60 Hz

Service kit, DME 60-10

Model	Valves	Materials			Connection	Complete dosing head	Valves + diaphragm	Non-return valves	Diaphragm
		Dosing head	Gaskets	Valve balls		Pos. 1 + 2 + 3 + 4 + 5 + 6	Pos. 1 + 2 + 3	Pos. 2 + 3	Pos. 1
DME 60-10	Spring loaded	PP	EPDM	Ceramic	NPT 3/4	96549405	96520368	96519446	96519470
			EPDM	Ceramic	Hoseclamp	96520459	96520368	96519446	96519470
			EPDM	Ceramic	Rp 3/4	96620070	96520368	96519446	96519470
			FKM	Ceramic	NPT 3/4	96549406	96520369	96519447	96519470
			FKM	Ceramic	Hoseclamp	96520460	96520369	96519447	96519470
			FKM	Ceramic	Rp 3/4	96620071	96520369	96519447	96519470
		PVDF	FKM	Ceramic	NPT 3/4	96549407	96520370	96519448	96519470
			FKM	Ceramic	Hoseclamp	96520461	96520370	96519448	96519470
			FKM	Ceramic	Rp 3/4	96620072	96520370	96519448	96519470
			PTFE	Ceramic	Hoseclamp	96945474	96690557	96690553	96519470
		Stainless Steel	FKM	Stainless Steel	NPT 3/4	96549408	96520371	96519449	96519470
			FKM	Stainless Steel	Rp 3/4	96520462	96520371	96519449	96519470
	Standard	PP	EPDM	Ceramic	NPT 3/4	96549401	96520364	96519442	96519470
			EPDM	Ceramic	Hoseclamp	96520454	96520364	96519442	96519470
			EPDM	Ceramic	Rp 3/4	96620067	96520364	96519442	96519470
			FKM	Ceramic	NPT 3/4	96549402	96520365	96519443	96519470
			FKM	Ceramic	Hoseclamp	96520455	96520365	96519443	96519470
			FKM	Ceramic	Rp 3/4	96620068	96520365	96519443	96519470
		PVDF	FKM	Ceramic	NPT 3/4	96549403	96520366	96519444	96519470
			FKM	Ceramic	Hoseclamp	96520456	96520366	96519444	96519470
			FKM	Ceramic	Rp 3/4	96620069	96520366	96519444	96519470
			PTFE	Ceramic	Hoseclamp	96690542	96690556	96573952	96519470
		Stainless Steel	FKM	Stainless Steel	NPT 3/4	96549404	96520367	96519445	96519470
			FKM	Stainless Steel	Rp 3/4	96520458	96520367	96519445	96519470
			PTFE	Stainless Steel	Rp 3/4	97939086	97571911	97571912	96519470

Service kit, DME 150-4

Model	Valves	Materials			Connection	Complete dosing head	Valves + diaphragm	Non-return valves	Diaphragm
		Dosing head	Gaskets	Valve balls		Pos. 1 + 2 + 3 + 4 + 5 + 6	Pos. 1 + 2 + 3	Pos. 2 + 3	Pos. 1
DME 150-4	Spring loaded	PP	EPDM	Ceramic	NPT 3/4	96549434	96520376	96519446	96519471
			EPDM	Ceramic	Hoseclamp	96520467	96520376	96519446	96519471
			EPDM	Ceramic	Rp 3/4	96620076	96520376	96519446	96519471
			FKM	Ceramic	NPT 3/4	96549435	96520377	96519447	96519471
			FKM	Ceramic	Hoseclamp	96520468	96520377	96519447	96519471
			FKM	Ceramic	Rp 3/4	96620077	96520377	96519447	96519471
		PVDF	FKM	Ceramic	NPT 3/4	96549436	96520378	96519448	96519471
			FKM	Ceramic	Hoseclamp	96520469	96520378	96519448	96519471
			FKM	Ceramic	Rp 3/4	96620078	96520378	96519448	96519471
			PTFE	Ceramic	Hoseclamp	96690546	96690559	96690553	96519471
		SS	FKM	Stainless Steel	NPT 3/4	96549437	96520379	96519449	96519471
			FKM	Stainless Steel	Rp 3/4	96520470	96520379	96519449	96519471
	Standard	PP	EPDM	Ceramic	NPT 3/4	96549409	96520372	96519442	96519471
			EPDM	Ceramic	Hoseclamp	96520463	96520372	96519442	96519471
			EPDM	Ceramic	Rp 3/4	96620073	96520372	96519442	96519471
			FKM	Ceramic	NPT 3/4	96549431	96520373	96519443	96519471
			FKM	Ceramic	Hoseclamp	96520464	96520373	96519443	96519471
			FKM	Ceramic	Rp 3/4	96620074	96520373	96519443	96519471
		PVDF	FKM	Ceramic	NPT 3/4	96549432	96520374	96519444	96519471
			FKM	Ceramic	Hoseclamp	96520465	96520374	96519444	96519471
			FKM	Ceramic	Rp 3/4	96620075	96520374	96519444	96519471
			PTFE	Ceramic	NPT 3/4	97766484	96690558	96573952	96519471
			PTFE	Ceramic	Hoseclamp	96690544	96690558	96573952	96519471
		SS	EPDM	Stainless Steel	NPT 3/4	97908196	96631331	96578547	96519471
			FKM	Stainless Steel	NPT 3/4	96549433	96520375	96519445	96519471
			FKM	Stainless Steel	Rp 3/4	96520466	96520375	96519445	96519471
			PTFE	Stainless Steel	Rp 3/4	98125938	97571880	97571912	96519471

Service kit, DME 375-10

Missing spare part numbers are available on request.

Dosing Head		Gasket		Valve Ball	
Material	Description	Material	Description	Material	Description
PP	Polypropylene	E	EPDM	C	Ceramic
PV	PVDF	T	PTFE / Teflon	G	Glass
SS	Stainless Steel	V	Viton / FKM / FPM	SS	Stainless Steel
-	-	-	-	T	PTFE / Teflon
-	-	-	-	Y	Hastelloy C

Model	Valves	Materials			Connection inlet	Complete dosing head Pos. 1 + 2 + 3 + 4 + 5 + 6	Valves + diaphragm Pos. 1 + 2 + 3	Valves Pos. 2 + 3	Diaphragm Pos. 1
		Dosing head	Gasket	Valve ball					
DME 375-10	Spring loaded	PP	E	G	NPT	96561186	96520384	96519456	96519472
					RP	96520475	96520384	96519456	96519472
				C	NPT	-	-	96741736	96519472
					RP	-	-	96741736	96519472
				SS	NPT	-	97749007	96741739	96519472
					RP	-	97749007	96741739	96519472
				T	NPT	-	-	-	96519472
					RP	-	-	-	96519472
			T	G	NPT	-	-	-	96519472
					RP	-	-	-	96519472
				C	NPT	-	-	-	96519472
					RP	-	-	-	96519472
				SS	NPT	-	-	-	96519472
					RP	-	-	-	96519472
				T	NPT	-	-	-	96519472
					RP	-	-	-	96519472
			V	G	NPT	96561187	96520385	96519457	96519472
					RP	96520476	96520385	96519457	96519472
				C	NPT	98798923	-	96741741	96519472
					RP	-	-	96741741	96519472
				SS	NPT	-	-	-	96519472
					RP	-	-	-	96519472
				T	NPT	-	-	-	96519472
					RP	-	-	-	96519472

Model	Valves	Materials			Connection inlet	Complete dosing head Pos. 1 + 2 + 3 + 4 + 5 + 6	Valves + diaphragm Pos. 1 + 2 + 3	Valves Pos. 2 + 3	Diaphragm Pos. 1
		Dosing head	Gasket	Valve ball					
DME 375-10	Spring loaded	PV	E	G	NPT	-	-	96741854	96519472
					RP	-	-	96741854	96519472
				C	NPT	-	-	96741852	96519472
					RP	-	-	96741852	96519472
				SS	NPT	-	-	96741856	96519472
					RP	-	-	96741856	96519472
				T	NPT	-	-	-	96519472
					RP	-	-	-	96519472
			T	G	NPT	-	99967098	96741859	96519472
					RP	99967099	99967098	96741859	96519472
				C	NPT	-	96690561	96690555	96519472
					RP	96690550	96690561	96690555	96519472
				SS	NPT	-	-	96741861	96519472
					RP	-	-	96741861	96519472
				T	NPT	-	-	96741864	96519472
					RP	-	-	96741864	96519472
			V	G	NPT	96561188	96520386	96519458	96519472
					RP	96520477	96520386	96519458	96519472
				C	NPT	-	-	96741866	96519472
					RP	-	-	96741866	96519472
				SS	NPT	-	-	96741869	96519472
					RP	-	-	96741869	96519472
				T	NPT	-	-	-	96519472
					RP	-	-	-	96519472
DME 375-10	Spring loaded	SS	E	G	NPT	-	-	-	96519472
					RP	-	-	-	96519472
				C	NPT	-	-	-	96519472
					RP	-	-	-	96519472
				SS	NPT	-	-	96741873	96519472
					RP	-	-	96741873	96519472
				T	NPT	-	-	-	96519472
					RP	-	-	-	96519472
			T	G	NPT	-	-	-	96519472
					RP	-	-	-	96519472
				C	NPT	-	-	-	96519472
					RP	-	-	-	96519472
				SS	NPT	-	98570606	98570604	96519472
					RP	98570605	98570606	98570604	96519472
				T	NPT	-	-	-	96519472
					RP	-	-	-	96519472
			V	G	NPT	-	-	-	96519472
					RP	-	-	-	96519472
				C	NPT	-	-	-	96519472
					RP	-	-	-	96519472
				SS	NPT	96561189	96520387	96519459	96519472
					RP	96520478	96520387	96519459	96519472
				T	NPT	-	-	-	96519472
					RP	-	-	-	96519472

Model	Valves	Materials			Connection inlet	Complete dosing head Pos. 1 + 2 + 3 + 4 + 5 + 6	Valves + diaphragm Pos. 1 + 2 + 3	Valves Pos. 2 + 3	Diaphragm Pos. 1
		Dosing head	Gasket	Valve ball					
DME 375-10	Standard	PP	E	G	NPT	96561182	96520380	96519452	96519472
				G	RP	-	96520380	96519452	96519472
				C	NPT	96967724	99838531	96741735	96519472
				C	RP	99710176	99838531	96741735	96519472
				SS	NPT	97908194	97851907	96741737	96519472
				SS	RP	97521700	97851907	96741737	96519472
				T	NPT	-	-	-	96519472
				T	RP	-	-	-	96519472
			T	G	NPT	-	-	-	96519472
				G	RP	-	-	-	96519472
				C	NPT	98737441	-	-	96519472
				C	RP	-	-	-	96519472
				SS	NPT	-	-	-	96519472
				SS	RP	-	-	-	96519472
				T	NPT	-	-	-	96519472
				T	RP	-	-	-	96519472
			V	G	NPT	96561183	96520381	96519453	96519472
				G	RP	-	96520381	96519453	96519472
				C	NPT	-	98561966	96741740	96519472
				C	RP	99699657	98561966	96741740	96519472
				SS	NPT	-	97919262	96741742	96519472
				SS	RP	97915359	97919262	96741742	96519472
				T	NPT	-	-	-	96519472
				T	RP	-	-	-	96519472
DME 375-10	Standard	PV	E	G	NPT	-	-	96741853	96519472
				G	RP	-	-	96741853	96519472
				C	NPT	-	-	96741841	96519472
				C	RP	-	-	96741841	96519472
				SS	NPT	-	-	96741855	96519472
				SS	RP	-	-	96741855	96519472
				T	NPT	-	-	-	96519472
				T	RP	-	-	-	96519472
			T	G	NPT	97766496	-	96748547	96519472
				G	RP	-	-	96748547	96519472
				C	NPT	-	96690560	96690554	96519472
				C	RP	96690547	96690560	96690554	96519472
				SS	NPT	98884106	-	96741860	96519472
				SS	RP	-	-	96741860	96519472
				T	NPT	97695393	96962893	96748545	96519472
				T	RP	-	96962893	96748545	96519472
			V	G	NPT	96561184	96520382	96519454	96519472
				G	RP	-	96520382	96519454	96519472
				C	NPT	97568698	-	96741865	96519472
				C	RP	99554255	-	96741865	96519472
				SS	NPT	-	-	96741868	96519472
				SS	RP	-	-	96741868	96519472
				T	NPT	-	-	-	96519472
				T	RP	-	-	-	96519472
				Y	NPT	-	-	96796910	-
				Y	RP	-	-	96796910	-

Model	Valves	Materials			Connection inlet	Complete dosing head Pos. 1 + 2 + 3 + 4 + 5 + 6	Valves + diaphragm Pos. 1 + 2 + 3	Valves Pos. 2 + 3	Diaphragm Pos. 1
		Dosing head	Gasket	Valve ball					
DME 375-10	Standard	SS	E	G	NPT	-	-	-	96519472
					RP	-	-	-	96519472
				C	NPT	97915412	97919267	-	96519472
					RP	-	97919267	-	96519472
				SS	NPT	98132956	96900295	96741871	96519472
					RP	99928202	96900295	96741871	96519472
				T	NPT	-	-	-	96519472
					RP	-	-	-	96519472
			T	G	NPT	-	-	-	96519472
					RP	-	-	-	96519472
				C	NPT	-	-	-	96519472
					RP	-	-	-	96519472
				SS	NPT	99519703	97571877	97571913	96519472
					RP	99868246	97571877	97571913	96519472
				T	NPT	-	-	-	96519472
					RP	-	-	-	96519472
			V	G	NPT	-	-	-	96519472
					RP	-	-	-	96519472
				C	NPT	-	-	-	96519472
					RP	-	-	-	96519472
				SS	NPT	96561185	96520383	96519455	96519472
					RP	96520474	96520383	96519455	96519472
				T	NPT	-	-	-	96519472
					RP	-	-	-	96519472

Service kit, DME 940-4

Missing spare part numbers are available on request.

Dosing Head		Gasket		Valve Ball	
Material	Description	Material	Description	Material	Description
PP	Polypropylene	E	EPDM	C	Ceramic
PV	PVDF	T	PTFE / Teflon	G	Glass
SS	Stainless Steel	V	Viton / FKM / FPM	SS	Stainless Steel
-	-	-	-	T	PTFE / Teflon
-	-	-	-	Y	Hastelloy C

Model	Valves	Materials			Connection inlet	Complete dosing head Pos. 1 + 2 + 3 + 4 + 5 + 6	Valves + diaphragm Pos. 1 + 2 + 3	Valves Pos. 2 + 3	Diaphragm Pos. 1
		Dosing head	Gasket	Valve ball					
DME 940-4	Spring loaded	PP	E	G	NPT	96561204	96520399	96519456	96519473
					RP	96520483	96520399	96519456	96519473
				C	NPT	-	-	96741736	96519473
					RP	-	-	96741736	96519473
				SS	NPT	-	-	96741739	96519473
					RP	-	-	96741739	96519473
				T	NPT	-	-	-	96519473
					RP	-	-	-	96519473
			T	G	NPT	-	-	-	96519473
					RP	-	-	-	96519473
				C	NPT	-	-	-	96519473
					RP	-	-	-	96519473
				SS	NPT	-	-	-	96519473
					RP	-	-	-	96519473
				T	NPT	-	-	-	96519473
					RP	-	-	-	96519473
			V	G	NPT	96561205	96520400	96519457	96519473
					RP	96520484	96520400	96519457	96519473
				C	NPT	-	-	96741741	96519473
					RP	-	-	96741741	96519473
				SS	NPT	-	97919264	96741743	96519473
					RP	97915396	97919264	96741743	96519473
				T	NPT	-	-	-	96519473
					RP	-	-	-	96519473
DME 940-4	Spring loaded	PV	E	G	NPT	-	-	96741854	96519473
					RP	-	-	96741854	96519473
				C	NPT	-	-	96741852	96519473
					RP	-	-	96741852	96519473
				SS	NPT	-	-	96741856	96519473
					RP	-	-	96741856	96519473
				T	NPT	-	-	-	96519473
					RP	-	-	-	96519473
DME 940-4	Spring loaded	PV	T	G	NPT	-	-	96741859	96519473
					RP	-	-	96741859	96519473
				C	NPT	-	96690563	96690555	96519473
					RP	96690552	96690563	96690555	96519473
				SS	NPT	-	-	96741861	96519473
					RP	-	-	96741861	96519473
				T	NPT	-	-	96741864	96519473
					RP	-	-	96741864	96519473
			V	G	NPT	96561206	96520401	96519458	96519473
					RP	96520485	96520401	96519458	96519473
				C	NPT	-	-	96741866	96519473
					RP	-	-	96741866	96519473
				SS	NPT	-	-	96741869	96519473
					RP	-	-	96741869	96519473
				T	NPT	-	-	-	96519473
					RP	-	-	-	96519473

Model	Valves	Materials			Connection inlet	Complete dosing head Pos. 1 + 2 + 3 + 4 + 5 + 6	Valves + diaphragm Pos. 1 + 2 + 3	Valves Pos. 2 + 3	Diaphragm Pos. 1
		Dosing head	Gasket	Valve ball					
DME 940-4	Spring loaded	SS	E	G	NPT	-	-	-	96519473
					RP	-	-	-	96519473
				C	NPT	-	-	-	96519473
					RP	-	-	-	96519473
				SS	NPT	-	99513875	96741873	96519473
					RP	-	99513875	96741873	96519473
				T	NPT	-	-	-	96519473
					RP	-	-	-	96519473
			T	G	NPT	-	-	-	96519473
					RP	-	-	-	96519473
				C	NPT	-	-	-	96519473
					RP	-	-	-	96519473
				SS	NPT	-	98570601	98570604	96519473
					RP	98570592	98570601	98570604	96519473
				T	NPT	-	-	-	96519473
					RP	-	-	-	96519473
			V	G	NPT	-	-	-	96519473
					RP	-	-	-	96519473
				C	NPT	-	-	-	96519473
					RP	-	-	-	96519473
				SS	NPT	96561207	96520402	96519459	96519473
					RP	96520486	96520402	96519459	96519473
				T	NPT	-	-	-	96519473
					RP	-	-	-	96519473
DME 940-4	Standard	PP	E	G	NPT	96561200	96520391	96519452	96519473
					RP	96520479	96520391	96519452	96519473
				C	NPT	-	96944511	96741735	96519473
					RP	99710394	96944511	96741735	96519473
				SS	NPT	-	-	-	96519473
					RP	98480372	-	-	96519473
				T	NPT	-	-	-	96519473
					RP	-	-	-	96519473
			T	G	NPT	-	-	-	96519473
					RP	-	-	-	96519473
				C	NPT	98775035	-	-	96519473
					RP	-	-	-	96519473
				SS	NPT	-	-	-	96519473
					RP	-	-	-	96519473
				T	NPT	-	-	-	96519473
					RP	-	-	-	96519473
DME 940-4	Standard	PP	V	G	NPT	96561201	96520393	96519453	96519473
					RP	96520480	96520393	96519453	96519473
				C	NPT	-	-	96741740	96519473
					RP	-	-	96741740	96519473
				SS	NPT	-	-	-	96519473
					RP	-	-	-	96519473
				T	NPT	-	-	-	96519473
					RP	-	-	-	96519473

Model	Valves	Materials			Connection inlet	Complete dosing head Pos. 1 + 2 + 3 + 4 + 5 + 6	Valves + diaphragm Pos. 1 + 2 + 3	Valves Pos. 2 + 3	Diaphragm Pos. 1
		Dosing head	Gasket	Valve ball					
DME 940-4	Standard	PV	E	G	NPT	98414834	-	96741853	96519473
					RP	-	-	96741853	96519473
				C	NPT	-	-	96741841	96519473
					RP	-	-	96741841	96519473
				SS	NPT	-	-	96741855	96519473
					RP	-	-	96741855	96519473
				T	NPT	-	-	-	96519473
					RP	-	-	-	96519473
			T	G	NPT	97766508	97919265	96748547	96519473
					RP	97915360	97919265	96748547	96519473
				C	NPT	-	96690562	96690554	96519473
					RP	96690551	96690562	96690554	96519473
				SS	NPT	-	-	96741860	96519473
					RP	-	-	96741860	96519473
				T	NPT	-	97713545	96748545	96519473
					RP	97713544	97713545	96748545	96519473
			V	G	NPT	96561202	96520395	96519454	96519473
					RP	96520481	96520395	96519454	96519473
				C	NPT	-	-	96741865	96519473
					RP	99874217	-	96741865	96519473
				SS	NPT	-	-	96741868	96519473
					RP	-	-	96741868	96519473
				T	NPT	-	-	-	96519473
					RP	-	-	-	96519473
DME 940-4	Standard	SS	E	G	NPT	-	-	-	96519473
					RP	-	-	-	96519473
				C	NPT	-	-	-	96519473
					RP	-	-	-	96519473
				SS	NPT	-	-	-	96519473
					RP	98587963	-	-	96519473
				T	NPT	-	-	-	96519473
					RP	-	-	-	96519473
			T	G	NPT	-	-	-	96519473
					RP	-	-	-	96519473
				C	NPT	-	-	-	96519473
					RP	-	-	-	96519473
				SS	NPT	-	97568699	97571913	96519473
					RP	99062234	97568699	97571913	96519473
				T	NPT	-	-	-	96519473
					RP	-	-	-	96519473
			V	G	NPT	-	-	-	96519473
					RP	-	-	-	96519473
				C	NPT	-	-	-	96519473
					RP	-	-	-	96519473
				SS	NPT	96561203	96520397	96519455	96519473
					RP	96520482	96520397	96519455	96519473
				T	NPT	-	-	-	96519473
					RP	-	-	-	96519473
DME 940-4	Standard	PV	V	Y	NPT	-	-	96796910	-
					RP	-	-	96796910	-

DME 60 to 940 l/h

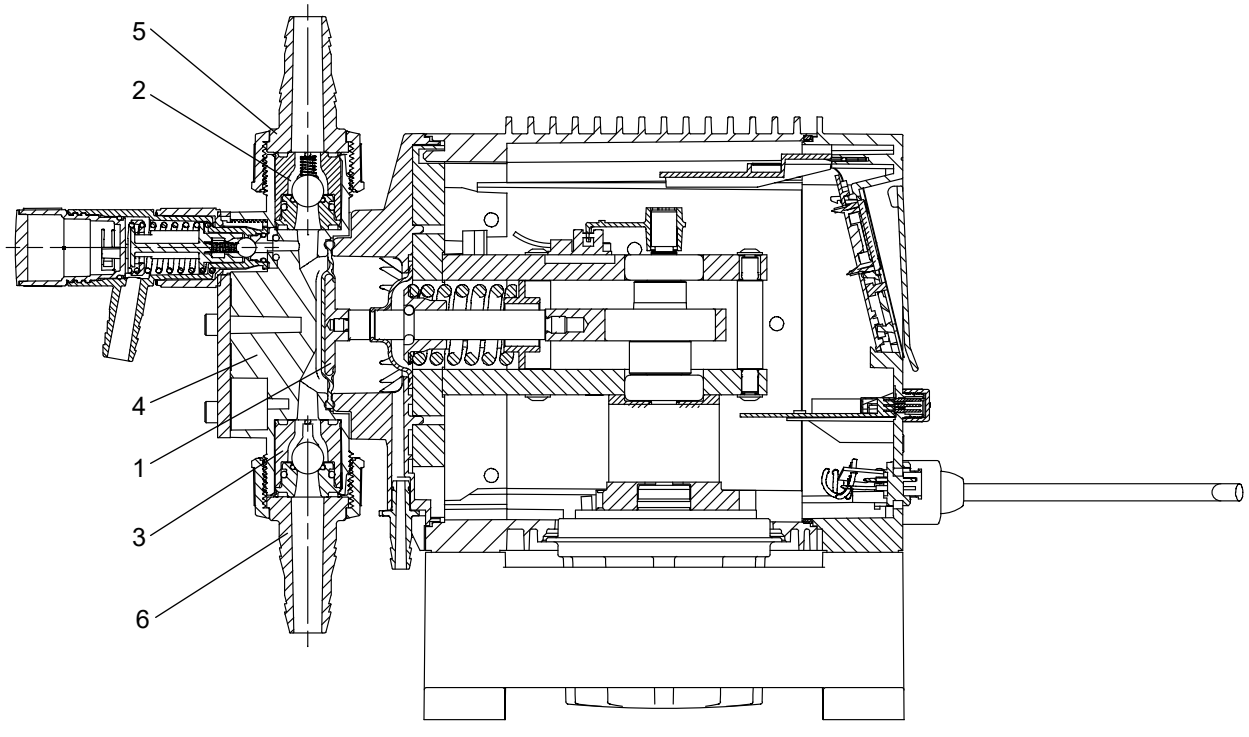

DME (all versions)

Vent valve

Pump size	Materials: Dosing head/gaskets/valve balls	Kit No
DME 2-18 DME 8-10 DME 12-6 DME 19-6 DME 48-3	PP/FKM/ceramic	96484193
	PVDF/FKM/ceramic	96484195
DME 60-10 DME 150-4 DME 375-10 DME 940-4	PP/EPDM/ceramic	96520488
	PP/FKM/ceramic	96520489
	PVDF/FKM/ceramic	96520500
	PVDF/EPDM/ceramic	96578549
	PVDF/FKM/SS	96578570
	PVDF/EPDM/SS	96578571
	PP/EPDM/SS	96770401

Balls for inlet and outlet valves

Pump size	Ball material	Amount	Bulk No
DME 60/150	Ceramic	12	97720573
	PTFE	12	97720576
DME 375/ 940	Glass	12	99944467
	Ceramic	12	97720577
	PTFE	12	97720579
	SS	2	98096620
	Hastelloy C	2	97775079

Balls for vent valves

Pump size	Dosing Head Material	Ball material	Amount	Bulk No
DME 60/150 DME 375/940	PP, PV	C	12	96561057
	SS	SS	12	96530330

Power cable, DME and DMS

Pump type	Description	Kit No
DME DMS	Schuko	96497534
	United States	96497535
	Switzerland	96497536
	Australia	96497537
	United Kingdom	96497538
	Japan	96497539

Repair parts (DME 375 and 940 l/h)

Description	Part No
Spare, Foot DME	96751614
Kit, I&O board	97753242
Kit, gear unit, frame back plate, hall sensor, front operation	97753197
Kit, gear unit, frame back plate, hall sensor, side operation	97753198
Kit, Cabinet for front operation	97753200
Kit, Cabinet for side operation	97753199
Kit, Front cover B version, front operation	97753233
Kit, Front cover AR version, front operation	97753234
Kit, Front cover B version, side operation	97753231
Kit, Front cover AR version, side operation	97753232
Kit, Display, front operation	97753245
Kit, Display, side operation	97753244
Kit, Driver board	97753246
Kit, Motor set	96751613
Kit, Back plate DME 375 l/h	97753247
Kit, Back plate DME 940 l/h	97753248
Retrofit Kit: existing AR & AP versions to be equipped with leakage sensor	96534443
Accessory: M12 Splitter / T-Connector: Usage of analog signal + leakage detection	99904127

DDI

DDI 209

Maintenance kit

Pump					Valves + diaphragm (2 valves + diaphragm)	Diaphragm	Venting valve	Dosing head	
								Head	Head w. flow monitor
Model	Version		Pos.	Standard	2 x 2 + 3	3	1	1,2 x 2,3,4	1,2 x 2,3,4,5
				Plus 3	2 x 2 + 3	3	1	2 x 2,3,6	2 x 2,3,6
		Materials							
		Head	Gasket	Ball					
DDI 0.4-10	Standard	PP	EPDM	Ceramic	-	98337186	98367756	-	-
		PP	FKM	Ceramic	96688957	98337186	98369884	-	-
		PVC	EPDM	Ceramic	96636330	98337186	98369911	-	-
		PVC	FKM	Ceramic	96729364	98337186	98369919	-	-
		PVC	PTFE	Ceramic	98327521	98337186	98369911	-	-
		PVC	PTFE	PTFE	98156956	98337186	98369911	-	-
		PVDF	EPDM	Ceramic	98327611	98337186	98369931	-	-
		PVDF	FKM	Ceramic	98327618	98337186	98369932	-	-
		PVDF	PTFE	Ceramic	91835866	98337186	98369931	-	-
		PVDF	PTFE	PTFE	98327625	98337186	98369931	-	-
		SS	EPDM	SS	98336647	98337186	98369931	-	-
		SS	FKM	SS	98327670	98337186	98369932	-	-
		SS	PTFE	SS	98327693	98337186	98369931	-	-
	Plus 3	PP	EPDM	Ceramic	-	98337293	98367756	-	-
		PP	FKM	Ceramic	-	98337293	98369884	-	-
		PVC	EPDM	Ceramic	91835905	98337293	98369911	98354661	98356006
		PVC	FKM	Ceramic	91835901	98337293	98369919	98354673	98359521
DDI 2.2 - 16 DDI 2.5 - 10 DDI 5.5 - 10	Standard	PP	EPDM	Ceramic	96634415	98337640	98367756	98354771	-
		PP	FKM	Ceramic	91836540	98337640	98369884	98354776	-
		PVC	EPDM	Ceramic	96643263	98337640	98369911	98354790	98354489
		PVC	FKM	Ceramic	96688816	98337640	98369919	98354802	98368920
		PVC	PTFE	Ceramic	96729545	98337640	98369911	98354807	98368964
		PVC	PTFE	PTFE	95707374	98337640	98369911	-	-
		PVDF	EPDM	Ceramic	98328157	98337640	98369931	98354819	-
		PVDF	FKM	Ceramic	98328174	98337640	98369932	98356000	-
		PVDF	PTFE	Ceramic	96641403	98337640	98369931	98356004	98369021
		PVDF	PTFE	PTFE	98328177	98337640	98369931	-	-
		SS	EPDM	SS	98336665	98337640	98369931	-	-
		SS	FKM	SS	98328183	98337640	98369932	-	98369259
		SS	PTFE	SS	98328206	98337640	98369931	-	98369275
	Plus 3	PP	EPDM	Ceramic	-	98337641	98367756	-	-
		PP	FKM	Ceramic	-	98337644	98369884	-	-
		PVC	EPDM	Ceramic	96645650	98337641	98369911	98158492	98369354
		PVC	FKM	Ceramic	96641420	98337644	98369919	91835885	98369355
DDI 13,8-4	Standard	PP	EPDM	Ceramic	98337012	98337650	98369933	98369998	98369934
		PP	FKM	Ceramic	96729512	98337650	98369935	98370000	98369937
		PVC	EPDM	Ceramic	98337015	98337650	98369940	98370002	98369939
		PVC	FKM	Ceramic	96656267	98337650	98369962	98370003	98369963
		PVC	PTFE	Ceramic	98337016	98337650	98369964	98370004	-
		PVC	PTFE	PTFE	95715912	98337650	98369964	98370005	-
		PVDF	PTFE	Ceramic	-	98337650	98369967	-	-
		SS	EPDM	SS	98337117	98337650	-	-	-
		SS	FKM	SS	98337163	98337650	98369969	98370006	98369993
		SS	PTFE	SS	98337168	98337650	98369992	98370010	98369994

Pump					Valves + diaphragm (2 valves + diaphragm)	Diaphragm	Venting valve	Dosing head	
								Head	Head w. flow monitor
Model	Version		Pos.	Standard	2 x 2 + 3	3	1	1,2 x 2,3,4	1,2 x 2,3,4,5
				Plus 3	2 x 2 + 3	3	1	2 x 2,3,6	2 x 2,3,6
		Materials							
		Head	Gasket	Ball					
DDI 20-3	Standard	PP	EPDM	Ceramic	98337012	98337650	98369933	98159567	98369371
		PP	FKM	Ceramic	96729512	98337650	98369935	98159583	98369372
		PVC	EPDM	Ceramic	98337015	98337650	98369940	98159585	98369374
		PVC	FKM	Ceramic	96656267	98337650	98369962	98159589	98369380
		PVC	PTFE	Ceramic	98337016	98337650	98369964	98159868	-
		PVC	PTFE	PTFE	95715912	98337650	98369964	98159820	-
		PVDF	EPDM	Ceramic	98337099	98337650	-	-	-
		PVDF	PTFE	Ceramic	-	98337650	98369967	-	98369385
		PVDF	PTFE	PTFE	-	98337650	98369967	-	-
		SS	EPDM	SS	98337117	98337650	-	-	-
		SS	FKM	SS	98337163	98337650	98369969	98164371	98369383
		SS	PTFE	SS	98337168	98337650	98369992	98164377	98369386

DDI 209 Standard

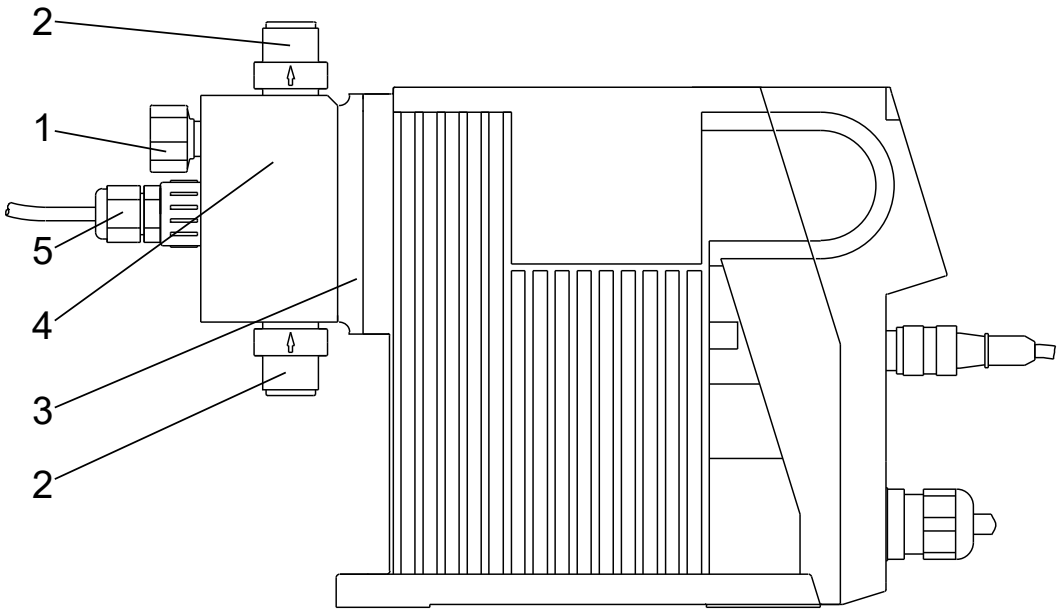

TM056939

DDI 209 Plus 3

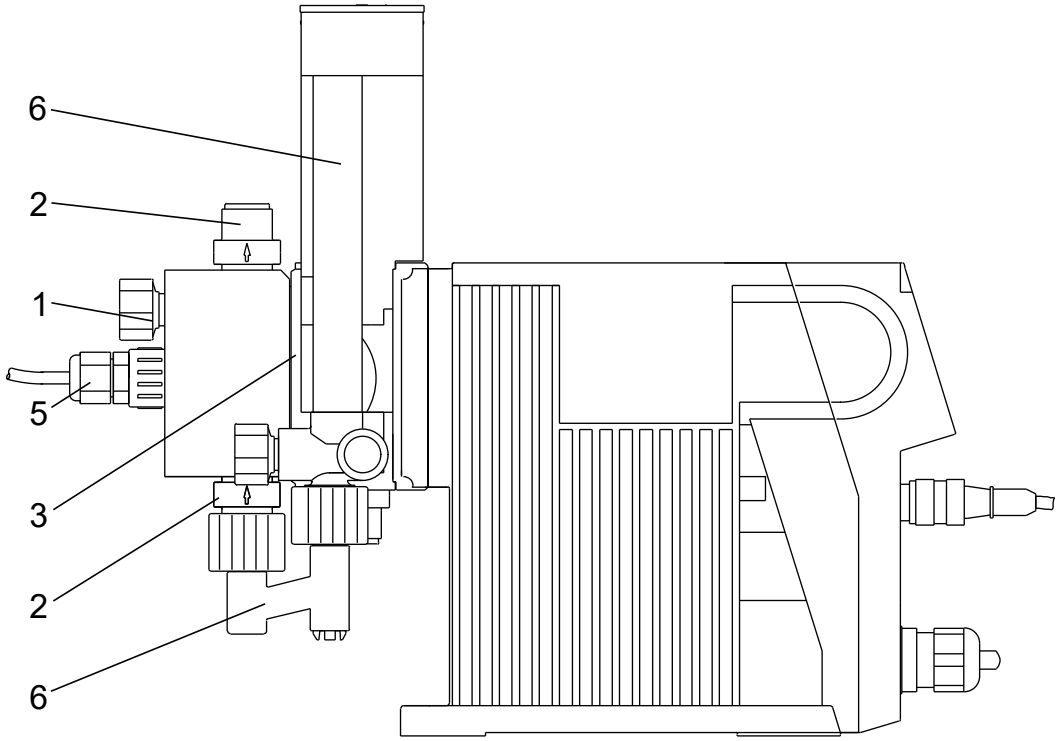

TM056940

Spring loaded valves

Model	Valve size	Material			Product number
		Body	Gasket	Ball	
DDI 0.4 DDI 2.2 DDI 2.5 DDI 5.5	DN4	PVC	EPDM	Ceramic	98366502
			FKM	Ceramic	98366527
			PTFE	Ceramic	98366528
		PP	EPDM	Ceramic	98366529
			FKM	Ceramic	98366541
		PVDF	PTFE	Ceramic	98366542
		Stainless steel (SS)	FKM	SS	98366544
			PTFE	SS	98366545
DDI 13.8, 20	DN8	PVC	EPDM	Ceramic	98366551
			FKM	Ceramic	98366546
			PTFE	Ceramic	98366552
		PP	EPDM	Ceramic	98366553
			FKM	Ceramic	98366555
		PVDF	PTFE	Ceramic	98366557
		Stainless steel (SS)	FKM	SS	98366558
			PTFE	SS	98366559

Kits for ClO_2 applications

Model	Version	Material			Kit, valves + diaphragm	Kit, diaphragm
		Body	Gasket	Ball	Product number	Product number
DDI 2.2, 2.5, 5.5	Standard	PVC	FKM	Ceramic	96729439	96729439

Connection set for DDI 209 (up to 6 l/h)

Info	Kit No
Connection set DN4 PVC 4/6 mm	91835692
Connection set DN4 PP 4/6 mm	91835705

DDI 222

Maintenance kit

Model	Version	Materials				Product number	
		Valve Body	Gasket	Seat	Ball	Valves + Diaphragm	Diaphragm
						pos. 2 x 2 + 3	pos. 3
DDI 60-10	Std.	1.4571	FKM	FKM	1.4401	96688932 [5]-	91836522
DDI 60-10	Std.	1.4571	PTFE	PTFE	1.4401	96688933 [5]	91836522
DDI 60-10	Std.	PP	EPDM	EPDM	PTFE	96688939	91836522
DDI 60-10	Std.	PP	FKM	FKM	Glas	96688938	91836522
DDI 60-10	Std.	PVC	EPDM	EPDM	1.4401	91836617	91836522
DDI 60-10	Std.	PVC	FKM	FKM	Glas	96641808	91836522
DDI 60-10	Std.	PVC	PTFE	PTFE	Ceramic	96688927	91836522
DDI 60-10	Std.	PVC	PTFE	PTFE	PTFE	96688928	91836522
DDI 60-10	Std.	PVDF	PTFE	PTFE	PTFE	96641810	91836522
DDI 60-10	abr.	1.4571	FKM	1.4571	1.4401	96688934 [5]	91836522
DDI 60-10	DLD/abr.	1.4571	FKM	1.4571	1.4401	96688937 [5]	91836521
DDI 60-10	DLD	1.4571	FKM	FKM	1.4401	-	91836521
DDI 60-10	DLD	1.4571	PTFE	PTFE	1.4401	96688936 [5]	91836521
DDI 60-10	DLD	PP	EPDM	EPDM	PTFE	96688941	91836521
DDI 60-10	DLD	PP	FKM	FKM	Glas	96688940	91836521
DDI 60-10	DLD	PVC	EPDM	EPDM	1.4401	96688929	91836521
DDI 60-10	DLD	PVC	FKM	FKM	Glas	91836337	91836521
DDI 60-10	DLD	PVC	PTFE	PTFE	Ceramic	96688930	91836521
DDI 60-10	DLD	PVC	PTFE	PTFE	PTFE	96688931	91836521
DDI 60-10	DLD	PVDF	PTFE	PTFE	PTFE	96688942	91836521
DDI 150-4	Std.	1.4571	FKM	1.4571	1.4401	96688949 [5]	91836524
DDI 150-4	Std.	1.4571	PTFE	1.4571	1.4401	96688950 [5]	91836524
DDI 150-4	Std.	PVC-PP	EPDM	PTFE	1.4401	96641222 [5]	91836524
DDI 150-4	Std.	PVC-PP	EPDM	PTFE	PTFE	96688944 [5]	91836524
DDI 150-4	Std.	PVC-PP	FKM	PTFE	Glas	96634524 [5]	91836524
DDI 150-4	Std.	PVC-PP	PTFE	PTFE	Ceramic	96688943 [5]	91836524
DDI 150-4	Std.	PVC-PP	PTFE	PTFE	PTFE	96729504 [5]	91836524
DDI 150-4	Std.	PVDF	PTFE	PTFE	PTFE	96641811 [5]	91836524
DDI 150-4	DLD	1.4571	FKM	1.4571	1.4401	96688952 [5]	91836523
DDI 150-4	DLD	1.4571	PTFE	1.4571	1.4401	96688953 [5]	91836523
DDI 150-4	DLD	PVC-PP	EPDM	PTFE	1.4401	96688946 [5]	91836523
DDI 150-4	DLD	PVC-PP	EPDM	PTFE	PTFE	96688948 [5]	91836523
DDI 150-4	DLD	PVC-PP	FKM	PTFE	Glas	96688945 [5]	91836523
DDI 150-4	DLD	PVC-PP	PTFE	PTFE	Ceramic	96688947 [5]	91836523
DDI 150-4	DLD	PVC-PP	PTFE	PTFE	PTFE	96729505 [5]	91836523
DDI 150-4	DLD	PVDF	PTFE	PTFE	PTFE	96688956 [5]	91836523
DDI 150-4	abr.	1.4571	FKM	1.4571	1.4401	96688951 [5]	96679802

[5] Only with internal valve parts

Std.: Standard

DLD: Diaphragm leakage detection

abr.: Special valve for abrasive liquids

PVC-PP: kits are suitable for pumps with either PVC or PP heads

DDI 222 with flow monitor (dosing head, flow sensor and PTFE O-ring)

Model	Dosing head material	Kit No
		pos. 1
DDI 60-10	PVC	96688965
DDI 60-10	PP	96688967
DDI 60-10	PVDF	96688968
DDI 60-10	Stainless steel (SS)	96688966
DDI 150-4	PVC	96688971
DDI 150-4	PP	96688973
DDI 150-4	PVDF	96688974
DDI 150-4	Stainless steel (SS)	96688972

Important! These kits do not include check valves.

DDI 222 Electronics boards

Model	Description	Voltage	Kit No
DDI 60-150	Display on the side	110-240 AC	96688902

Cable and connectors

Application		Type	Pins	Coding	Straight/angled	Length	Other	Kit No
Input	Analog contact for remote switch	Plug connector	4	Groove (nut)	Straight	2	-	96609014
						5	-	96609016
						Plug only	-	96698715
					Angled	2	-	96693246
Output	Error relay stroke or pre-empty relay	Plug connector	4	Tappet	Straight	2	-	96609017
						5	-	96609019
						Plug only	-	96696198
					Angled	2	-	96698716
Output	Analog	Plug connector	5	Groove (nut)	Straight	2	-	96632921
						5	-	96632922
						Plug only	-	96609031
					Angled	2	-	96699697
Combined	Flow monitor in analog out	Plug connector	5	Groove (nut)	Straight	Plug only	2 cable entries	96609030
Input	(Pre-)empty	Plug connector	4	Groove (nut)	Straight	Plug only	-	96698715
Input	Empty	Flat plug connector	2	Alldos-type	Straight	Plug only	Soldered cable	96679388
Input	(Pre-)empty	Flat plug connector	3	Alldos-type	Straight	Plug only	Soldered cable	96630345
Adaptor flat-round	(Pre-)empty	Plug connector	4	Groove (nut)	Straight	Plug only	-	96635010
PROFIBUS	Y-connector	-	-	-	-	Plug only	-	96693735
PROFIBUS	Terminating resistor	-	-	-	-	Plug only	-	96693737
Mains (model 222)	110-240 VAC	Solenoid valve connector	3	DIN 43650	Angled	Plug only	-	96698717

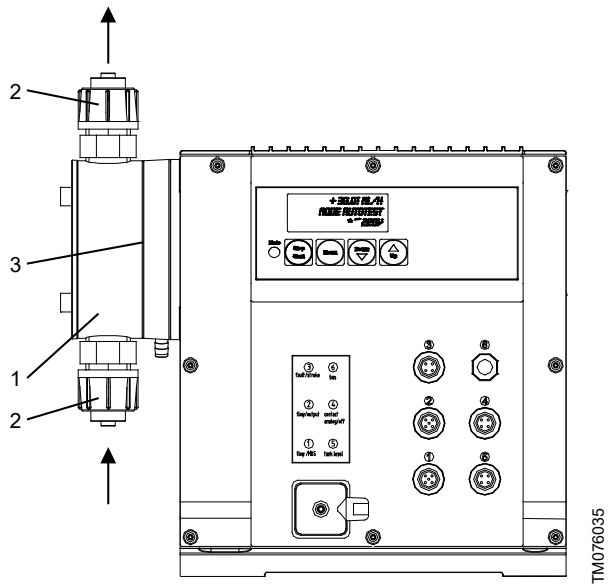
2
3
1
2
TM076035

DMI

DMI 208, 50/60 Hz

Maintenance kit, standard

Pump					Valves + diaphragm (2 valves + diaphragm)	Diaphragm	Venting valve	Head
Model	Version		Pos.	Standard	2 x 2 + 3	3	1	1,2x2,3,4
				Plus 3	2 x 2 + 3	3	1	2x2,3,5
		Materials						
		Head	Gasket	Ball				
DMI 0.3 - 10	Standard	PP	E	C	-	98337186	98367756	-
		PP	V	C	96688957	98337186	98369884	-
		PVC	E	C	96636330	98337186	98369911	-
		PVC	V	C	96729364	98337186	98369919	-
		PVC	T	C	98327521	98337186	98369911	-
		PVC	T	T	98156956	98337186	98369911	-
		PV	E	C	98327611	98337186	98369931	-
		PV	V	C	98327618	98337186	98369932	-
		PV	T	C	91835866	98337186	98369931	-
		PV	T	T	98327625	98337186	98369931	-
		SS	E	SS	98336647	98337186	98369931	-
		SS	V	SS	98327670	98337186	98369932	-
		SS	T	SS	98327693	98337186	98369931	-
	Plus 3	PP	E	C	-	98337293	98367756	-
		PP	V	C	-	98337293	98369884	-
		PVC	E	C	91835905	98337293	98369911	98354661
		PVC	V	C	91835901	98337293	98369919	98354673
DMI 0.8 - 16 DMI 1.0 - 10 DMI 1.6 - 10 DMI 3.0 - 10 DMI 3.6 - 16 DMI 4.0 - 8	Standard	PP	E	C	96634415	98337640	98367756	98354771
		PP	V	C	91836540	98337640	98369884	98354776
		PVC	E	C	96643263	98337640	98369911	98354790
		PVC	V	C	96688816	98337640	98369919	98354802
		PVC	T	C	96729545	98337640	98369911	98354807
		PVC	T	T	95707374	98337640	98369911	-
		PV	E	C	98328157	98337640	98369931	98354819
		PV	V	C	98328174	98337640	98369932	98356000
		PV	T	C	96641403	98337640	98369931	98356004
		PV	T	T	98328177	98337640	98369931	-
		SS	E	SS	98336665	98337640	98369931	-
		SS	V	SS	98328183	98337640	98369932	-
		SS	T	SS	98328206	98337640	98369931	-
	Plus 3	PP	E	C	-	98337641	98367756	-
		PP	V	C	-	98337641	98369884	-
		PVC	E	C	96645650	98337641	98369911	98158492
		PVC	V	C	96641420	98337641	98369919	91835885

Pump					Valves + diaphragm (2 valves + diaphragm)	Diaphragm	Venting valve	Head
Model	Version		Pos.	Standard	2 x 2 + 3	3	1	1,2x2,3,4
				Plus 3	2 x 2 + 3	3	1	2x2,3,5
		Materials						
		Head	Gasket	Ball				
DMI 5.0 - 6 DMI 6.0 - 8	Standard	PP	E	C	91836371	98337645	98367756	-
		PP	V	C	-	98337645	98369884	-
		PVC	E	C	91835873	98337645	98369911	-
		PVC	V	C	96688818	98337645	98369919	-
		PVC	T	C	98328553	98337645	98369911	-
		PVC	T	T	98328558	98337645	98369911	-
		PV	E	C	98330321	98337645	98369931	98158777
		PV	V	C	98330327	98337645	98369932	98158827
		PV	T	C	91835874	98337645	98369931	98158858
		PV	T	T	98330576	98337645	98369931	-
		SS	E	SS	98336681	98337645	98369931	-
		SS	V	SS	98330804	98337645	98369932	98158887
		SS	T	SS	98330809	98337645	98369931	98158889
	Plus 3	PP	E	C	-	98337647	98367756	-
		PP	V	C	-	98337647	98369884	-
		PVC	E	C	91835907	98337647	98369911	-
		PVC	V	C	91835902	98337647	98369919	-
DMI 9.0 - 6	Standard	PP	E	C	98337012	98337650	98369933	98369998
		PP	V	C	96729512	98337650	98369935	98370000
		PVC	E	C	98337015	98337650	98369940	98370002
		PVC	V	C	96656267	98337650	98369962	98370003
		PVC	T	C	98337016	98337650	98369964	98370004
		PVC	T	T	95715912	98337650	98369964	98370005
		PV	T	C	-	98337650	98369967	-
		SS	E	SS	98337117	98337650	-	-
		SS	V	SS	98337163	98337650	98369969	98370006
		SS	T	SS	98337168	98337650	98369992	98370010
DMI 14 - 4 DMI 18 - 3.5	Standard	PP	E	C	98337012	98337650	98369933	98159567
		PP	V	C	96729512	98337650	98369935	98159583
		PVC	E	C	98337015	98337650	98369940	98159585
		PVC	V	C	96656267	98337650	98369962	98159589
		PVC	T	C	98337016	98337650	98369964	98159868
		PVC	T	T	95715912	98337650	98369964	98159820
		PV	E	C	98337099	98337650	-	-
		PV	T	C	-	98337650	98369967	-
		PV	T	T	-	98337650	98369967	-
		SS	E	SS	98337117	98337650	-	-
		SS	V	SS	98337163	98337650	98369969	98164371
		SS	T	SS	98337168	98337650	98369992	98164377

DMI 208 standard

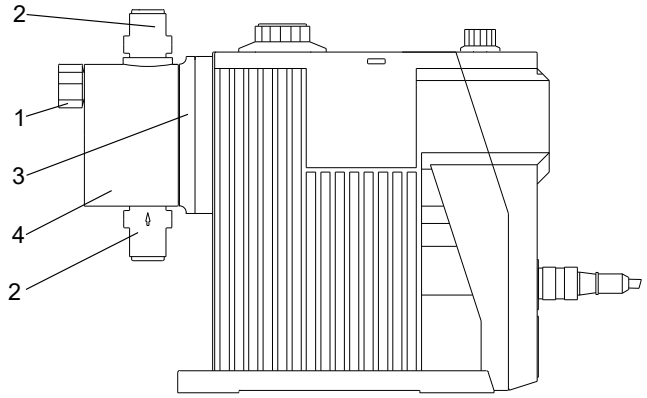

TM056943

DMI 208 Auto deaeration head

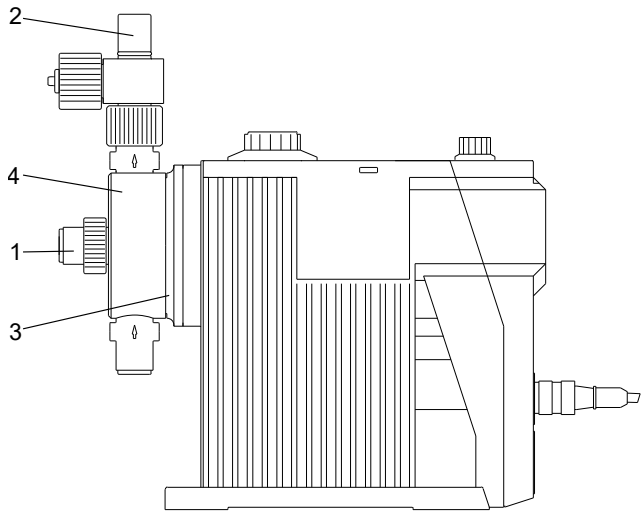

TM056941

DMI 208 plus 3

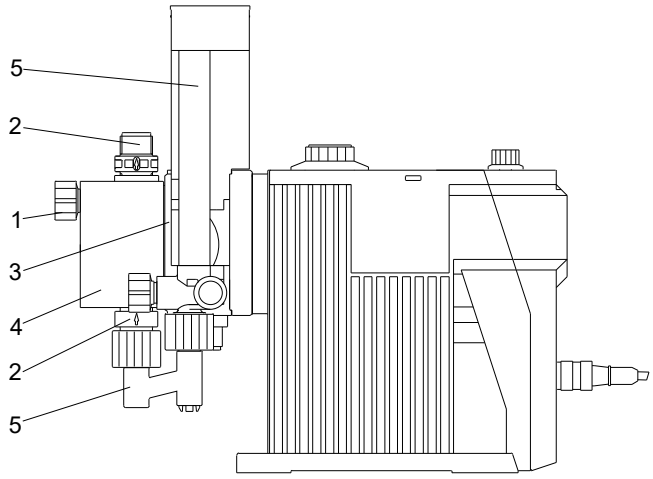

TM056942

Cable and connectors

Application		Type	Pins	Coding	Straight/angled	Cable length	Other	Kit No
Input	Analog contact for remote switch	Plug connector	4	Groove (nut)	Straight	2	-	96609014
						5	-	96609016
						Plug only	-	96698715
					Angled	2	-	96693246
Output	Error relay stroke or pre-empty relay	Plug connector	4	Tappet	Straight	2	-	96609017
						5	-	96609019
						Plug only	-	96696198
					Angled	2	-	96698716
Input	Empty	Flat plug connector	2	Alldos-type	Straight	Plug only	Soldered cable	96679388
Input	(Pre-)empty	Flat plug connector	3	Alldos-type	Straight	Plug only	Soldered cable	96630345
Adaptor flat-round	(Pre-)empty	Plug connector	4	Groove (nut)	Straight	Plug only	-	96635010

Kits for ClO_2 applications (diaphragm material: FKM)

Model	Version	Material			Valves + Diaphragm	Diaphragm
		Body	Gasket	Ball		
DMI 0.8, 1.0, 1.6, 3.0, 3.6, 4.0	Standard	PVC	V	C	96729439	98369260
DMI 5.0, 6.0	Standard	PVC	V	C	96688919	98369305

Spring loaded valves

Kit includes 1 x spring loaded valve for discharge side + 1 x standard valve

Model	Valve size	Material			Product number
		Body	Gaskets	Ball	
DMI 0.3 - 6.0	DN4	PVC	EPDM	Ceramic	98366502
			FKM	Ceramic	98366527
			PTFE	Ceramic	98366528
		PP	EPDM	Ceramic	98366529
			FKM	Ceramic	98366541
		PVDF	PTFE	Ceramic	98366542
		Stainless steel (SS)	FKM	Stainless steel (SS)	98366544
			PTFE	Stainless steel (SS)	98366545
DMI 9.0 DMI 14.0 DMI 18.0	DN8	PVC	EPDM	Ceramic	98366551
			FKM	Ceramic	98366546
			PTFE	Ceramic	98366552
		PP	EPDM	Ceramic	98366553
			FKM	Ceramic	98366555
		PVDF	PTFE	Ceramic	98366557
		Stainless steel (SS)	FKM	Stainless steel (SS)	98366558
			PTFE	Stainless steel (SS)	98366559

DMI 208 Unidos, maintenance kit

Model	Capacity	Version	Valve	Ball	O-ring	Kit No
			PVDF	PTFE	PTFE	
UNIDOS	0.8, 1, 1.6, 3, 4	W10	X	X	X	96688825
		W20	X	X	X	96688826

Connection set for DMI 208 (up to 6 l/h)

Info	Kit No
Connection set DN4 PVC 4/6 mm	91835692
Connection set DN4 PP 4/6 mm	91835705

DMH

DMH 1 x 115-240V, 50/60 Hz; 3 x 240/400V, 50Hz

Model 251 and 252, DN size 8

Nominal capacity [l/h]	Materials			Kit, maintenance [6]	1 valve (standard)	1 valve (spring-loaded) 0.8 bar	Kit diaphragm		Kit dosing head	
	Head / valve body	Gaskets	Balls				Standard	DLD	Standard	DLD
All	SS	PTFE	SS	98807236	98798546	On req.	99145999	98736902	98961637	98837940
	SS coated	PTFE	Ceramic	On req.	On req.	On req.	99145999	98736902	On req.	On req.
	Alloy C-4	PTFE	Alloy C-4	98807232	98798552	On req.	99145999	98736902	98961638	98837942
All capacities at 25 bar	SS	FKM	SS	98807234	98798547	On req.	99145999	98736902	On req.	On req.
All capacities below 16 bar	PP	EPDM	PTFE	98803615	98803612	On req.	99145999	98736902	98961634	98837941
	PP	FKM	Ceramic	98803618	98803600	On req.	99145999	98736902	98961634	98837941
	PP	EPDM	Ceramic	98803622	98798553	On req.	99145999	98736902	98961634	98837941
	PP	EPDM	SS	98803623	98803597	On req.	99145999	98736902	98961634	98837941
	PVDF	PTFE	Ceramic	98807230	99042682	On req.	99145999	98736902	98961636	98837939
	PVDF	PTFE	PTFE	98807231	99042694	On req.	99145999	98736902	98961636	98837939
	PVC	EPDM	Ceramic	On req.	98798550	On req.	99145999	98736902	98961635	98837938
	PVC	EPDM	SS	91836525	98798541	On req.	99145999	98736902	98961635	98837938
	PVC	PTFE	PTFE	95724883	98798545	On req.	99145999	98736902	98961635	98837938
	PVC	FKM	Ceramic	96688994	98798542	On req.	99145999	98736902	98961635	98837938
	PVC	FKM	SS	On req.	98798543	On req.	99145999	98736902	98961635	98837938
	PVC	EPDM	PTFE	On req.	98798548	On req.	99145999	98736902	98961635	98837938
	PVC	PTFE	SS	On req.	On req.	On req.	99145999	98736902	98961635	98837938
	SS	FKM	SS	98807237	98798547	On req.	99145999	98736902	On req.	On req.

6) Kit, maintenance may contain single parts or complete valve, depending on size and material.

Model 253, DN size 20

Nominal capacity [l/h]	Materials			Kit, maintenance [7]	1 valve (standard)	1 valve (spring-loaded) 0.6 bar	Kit diaphragm		Kit dosing head	
	Head / valve body	Gaskets	Balls				Standard	DLD	Standard	DLD
21, 43, 67, 83, 100	PP	EPDM	PTFE	96375327	98828458	98863249	99146000	98736903	98961639	98837934
	PP	FKM	Glass	91836421	98828459	98863250	99146000	98736903	98961639	98837934
	PVDF	PTFE	PTFE	On req.	98828464	98863254	99146000	98736903	98961642	98837936
	PVC	EPDM	Ceramic	On req.	98794843	-	99146000	98736903	98961641	98837935
	PVC	EPDM	SS	91835851	98828456	98863247	99146000	98736903	98961641	98837935
	PVC	EPDM	PTFE	96375327	98828468	98863252	99146000	98736903	98961641	98837935
	PVC	PTFE	Ceramic	On req.	98828469	98863253	99146000	98736903	98961641	98837935
	PVC	PTFE	PTFE	On req.	98802208	-	99146000	98736903	98961641	98837935
	PVC	FKM	Glass	91836421	98828457	98863248	99146000	98736903	98961641	98837935
	PVC	FKM	SS	98776778	98828463	98863257	99146000	98736903	98961641	98837935
	SS	EPDM	SS	98981388	98812756	-	99146000	98736903	98961643	98837937
	SS	PTFE	SS	96688913	98812758	98863256	99146000	98736903	98961643	98837937
	SS	FKM	SS	96375328	98828465	98863255	99146000	98736903	98961643	98837937

7) Kit, maintenance may contain single parts or complete valve, depending on size and material.

Model 254, DN size 20

Nominal capacity [l/h]	Materials			Kit, maintenance [8]	1 valve (standard)	1 valve (spring-loaded) 0.6 bar	Kit diaphragm		Kit dosing head	
	Head / valve body	Gaskets	Balls				Standard	DLD	Standard	DLD
50, 102, 143, 175, 213, 291, 97, 136, 166, 202, 276	PP	EPDM	PTFE	96375329	98828458	98863249	99145959	98736904	98961644	On req.
	PP	PTFE	PTFE	On req.	98828467	-	99145959	98736904	98961644	On req.
	PP	FKM	Glass	91835933	98828459	98863250	99145959	98736904	98961644	On req.
	PVDF	PTFE	PTFE	91835935	98828464	98863254	99145959	98736904	98961645	On req.
	PVC	EPDM	SS	91835852	98828456	98863247	99145959	98736904	98795105	98795108
	PVC	EPDM	PTFE	96375329	98828468	98863252	99145959	98736904	98795105	98795108
	PVC	PTFE	PTFE	On req.	98802208	-	99145959	98736904	98795105	98795108
	PVC	FKM	Glass	91835933	98828457	98863248	99145959	98736904	98795105	98795108
	PVC	FKM	SS	On req.	98828463	98863257	99145959	98736904	98795105	98795108
	SS	EPDM	SS	96689004	98812756	-	99145959	98736904	98795106	98795109
	SS	PTFE	SS	96697502	98812758	98863256	99145959	98736904	98795106	98795109
	SS	FKM	SS	96375330	98828465	98863255	99145959	98736904	98795106	98795109
	SS coated	PTFE	Ceramic	On req.	98812738	-	99145959	98736904	On req.	On req.

8) Kit, maintenance may contain single parts or complete valve, depending on size and material.

Model 255, DN size 20

Nominal capacity [l/h]	Materials			Kit, maintenance [9]	1 valve (standard)	1 valve (spring-loaded) 0.6 bar	Kit diaphragm		Kit dosing head	
	Head / valve body	Gaskets	Balls				Standard	DLD	Standard	DLD
194, 270, 332, 403	PP	EPDM	PTFE	On req.	98828458	98863249	99146002	98736905	98961646	98974158
	PP	FKM	Glass	On req.	98828459	98863250	99146002	98736905	98961646	98974158
	PVDF	PTFE	PTFE	On req.	98828464	98863254	99146002	98736905	98961648	98974171
	PVC	EPDM	Ceramic	On req.	98794843	-	99146002	98736905	98961647	98974159
	PVC	EPDM	SS	On req.	98828456	98863247	99146002	98736905	98961647	98974159
	PVC	EPDM	PTFE	96375331	98828468	98863252	99146002	98736905	98961647	98974159
	PVC	PTFE	PTFE	On req.	98802208	-	99146002	98736905	98961647	98974159
	PVC	FKM	Glass	96689016	98828457	98863248	99146002	98736905	98961647	98974159
	PVC	FKM	SS	On req.	98828463	98863257	99146002	98736905	98961647	98974159
	SS	EPDM	SS	98981389	98812756	-	99146002	98736905	98961650	98974160
	SS	PTFE	SS	98981390	98812758	98863256	99146002	98736905	98961650	98974160
	SS	FKM	SS	96375332	98828465	98863255	99146002	98736905	98961650	98974160
	Alloy C-4	PTFE	Alloy C-4	92866485	98812736	98863258	99146002	98736905	98961649	On req.

9) Kit, maintenance may contain single parts or complete valve, depending on size and material.

Model 255, DN size 20/32

Nominal capacity [l/h]	Materials			Kit, maintenance [10]	1 valve (inlet side)	1 valve (outlet side)	Kit diaphragm		Kit dosing head	
	Head / valve body	Gaskets	Balls				Standard	DLD	Standard	DLD
484, 540, 550	PP	EPDM	PTFE	On req.	98926659	98828458	99146002	98736905	98961646	98974158
	PP	FKM	Glass	On req.	98926660	98828459	99146002	98736905	98961646	98974158
	PVDF	PTFE	PTFE	91835939	98926674	98828464	99146002	98736905	98961648	98974171
	PVC	EPDM	SS	98734766	98926671	98828456	99146002	98736905	98961647	98974159
	PVC	FKM	Glass	91836545	98926672	98828457	99146002	98736905	98961647	98974159
	SS	EPDM	SS	98032805	98926676	98812756	99146002	98736905	98961650	98974160
	SS	PTFE	SS	98032806	98926677	98812758	99146002	98736905	98961650	98974160
	SS	FKM	SS	96375334	98926678	98828465	99146002	98736905	98961650	98974160
	Alloy C-4	PTFE	Alloy C-4	On req.	On req.	98812736	99146002	98736905	98961649	On req.

[10] For DN 32 valves as well as all SS and Alloy C-4 valves the kit contains only inner valve parts.

Model 257, DN size 32

Nominal capacity [l/h]	Materials			Kit, maintenance [11]	1 valve (inlet side)	1 valve (outlet side)	1 valve (spring-loaded) 0.6 bar	Kit diaphragm		Kit dosing head	
	Head / valve body	Gaskets	Balls					Standard	DLD	Standard	DLD
220, 440, 575, 750, 770, 880, 1150, 1500	PP	EPDM	Glass	98812530	98926686	98927603	-	99146013	98736906	98961661	98974154
	PP	EPDM	SS	98812529	98926687	98927604	On req.	99146013	98736906	98961661	98974154
	PP	FKM	Glass	98812528	98926679	98927605	On req.	99146013	98736906	98961661	98974154
	PVDF	PTFE	PTFE	98812525	98926682	98927608	-	99146013	98736906	98961663	98974156
	PVC	EPDM	SS	98734768	98926680	98927606	-	99146013	98736906	98961662	98974155
	PVC	FKM	Glass	98812527	98926681	98927607	On req.	99146013	98736906	98961662	98974155
	SS	EPDM	SS	98812524	98926683	98927609	-	99146013	98736906	98961664	98974157
	SS	PTFE	SS	98812523	98926684	98927610	-	99146013	98736906	98961664	98974157
	SS	FKM	SS	98812489	98926685	98927611	On req.	99146013	98736906	98961664	98974157

[11] Kit, maintenance may contain single parts or complete valve, depending on size and material.

Model 280, DN size 4

Nominal capacity [l/h]	Materials			Kit, maintenance [12]	1 valve (spring-loaded) 0.05 bar	Kit diaphragm		Kit dosing head	
	Head / valve body	Gaskets	Balls			Standard	DLD	Standard	DLD
1.3, 2.2, 2.5, 3.3	SS	EPDM	Ceramic	99054883	98725116	99146014	98736907	98961665	On req.
	SS	PTFE	Ceramic	99054884	98725118	99146014	98736907	98961665	On req.
	SS	FKM	Ceramic	99054885	98725117	99146014	98736907	98961665	On req.

[12] Kit, maintenance may contain single parts or complete valve, depending on size and material.

Model 281, DN size 8

Nominal capacity [l/h]	Materials			Kit, maintenance [13]	1 valve (spring-loaded) 0.05 bar	Kit diaphragm		Kit dosing head	
	Head / valve body	Gaskets	Balls			Standard	DLD	Standard	DLD
2, 4.2, 6.4, 8, 9.6	SS	PTFE	SS	98981411	98742209	99146015	98736908	98793708	98793709
	SS	FKM	SS	99054872	98742221	99146015	98736908	98793708	98793709
	Alloy C-4	PTFE	Alloy C-4	96688853	98736910	99146015	98736908	98793707	On req.

[13] Kit, maintenance may contain single parts or complete valve, depending on size and material.

Model 283, DN size 20

Nominal capacity [l/h]	Materials			Kit, maintenance [14]	1 valve (spring-loaded) 0.05 bar	Kit diaphragm		Kit dosing head	
	Head / valve body	Gaskets	Balls			Standard	DLD	Standard	DLD
10, 19, 27, 33, 40, 55	SS	PTFE	SS	99054870	98733078	99146016	98736909	98963144	On req.
	SS	FKM	SS	99054871	98733079	99146016	98736909	98963144	On req.
	SS coated	PTFE	Ceramic	On req.	98733080	99146016	98736909	On req.	On req.
	Alloy C-4	PTFE	Alloy C-4	96689007	98733077	99146016	98736909	98963143	On req.

14) Kit, maintenance may contain single parts or complete valve, depending on size and material.

Model 285, DN size 20

Nominal capacity [l/h]	Materials			Kit, maintenance [15]	1 valve (spring-loaded) 0.05 bar	Kit diaphragm		Kit dosing head	
	Head / valve body	Gaskets	Balls			Standard	DLD	Standard	DLD
20, 40, 52, 70, 80, 105	SS	PTFE	SS	99054870	98733078	99146016	98736909	98963144	On req.
	SS	FKM	SS	99054871	98733079	99146016	98736909	98963144	On req.
	Alloy C-4	PTFE	Alloy C-4	96689007	98733077	99146016	98736909	98963143	On req.

15) Kit, maintenance may contain single parts or complete valve, depending on size and material.

Model 286, DN size 20

Nominal capacity [l/h]	Materials			Kit, maintenance [16]	1 valve (standard)	Kit diaphragm		Kit dosing head	
	Head / valve body	Gaskets	Balls			Standard	DLD	Standard	DLD
85, 111, 170, 222	SS	EPDM	SS	98981412	98812740	99145959	98736904	98963145	On req.
	SS	PTFE	SS	99054886	98812752	99145959	98736904	98963145	On req.
	SS	FKM	SS	99054887	98812753	99145959	98736904	98963145	On req.
	SS coated	PTFE	Ceramic	On req.	On req.	99145959	98736904	On req.	On req.
	Alloy C-4	PTFE	Alloy C-4	On req.	98812739	99145959	98736904	On req.	On req.

16) Kit, maintenance may contain single parts or complete valve, depending on size and material.

Model 287, DN size 8

Nominal capacity [l/h]	Materials			Kit, maintenance [17]	1 valve (spring-loaded) 0.05 bar	Kit diaphragm		Kit dosing head	
	Head / valve body	Gaskets	Balls			Standard	DLD	Standard	DLD
9, 18, 23, 31, 36, 50	SS	PTFE	SS	99054888	98742209	99145956	98736922	98963146	On req.
	SS	FKM	SS	99054890	98742221	99145956	98736922	98963146	On req.
	SS	EPDM	SS	99145980	98742222	99145956	98736922	98963146	On req.

17) Kit, maintenance may contain single parts or complete valve, depending on size and material.

Model 288, DN size 8

Nominal capacity [l/h]	Materials			Kit, maintenance [18]	1 valve (spring-loaded) 0.05 bar	Kit diaphragm		Kit dosing head	
	Head / valve body	Gaskets	Balls			Standard	DLD	Standard	DLD
3.3, 7.5, 10, 13, 15, 21	SS	EPDM	SS	*98981414*	*98742222*	*99145956*	*98736922*	*98963148*	On req.
	SS	PTFE	SS	*99057329*	*98742209*	*99145956*	*98736922*	*98963148*	On req.
	SS	FKM	SS	*99057330*	*98742221*	*99145956*	*98736922*	*98963148*	On req.

[18] Kit, maintenance may contain single parts or complete valve, depending on size and material.

DMH lubricant kits

The kits include maintenance parts like gaskets, oil filter etc.

Model	Oil type	One dosing head		Two dosing heads	
		Approx. quantity [l]	Kit No	Approx. quantity [l]	Kit No
251	Paraffinum	1.3	98683954	1.3	98683954
252, 10 bar	Paraffinum	1.3	98683954	1.3	98683954
252, 16 bar	DHG 68	1.3	98683955	1.3	98683955
253	DHG 68	1.3	98683955	1.3	98683955
254	DHG 68	3.5	98683956	4.5	98683957
255	DHG 68	3.5	98683956	4.5	98683957
257	DHG 68	5.0	98683958	7.5	98683959
280	DHG 68	1.3	98683955	1.3	98683955
281	DHG 68	1.3	98683955	1.3	98683955
283	DHG 68	3.5	98683956	4.5	98683957
285	DHG 68	5.0	98683958	7.5	98683959
286	DHG 68	5.0	98683958	7.5	98683959
287	DHG 68	5.0	98683958	7.5	98683959
288	DHG 68	3.5	98683956	4.5	98683957

DMH

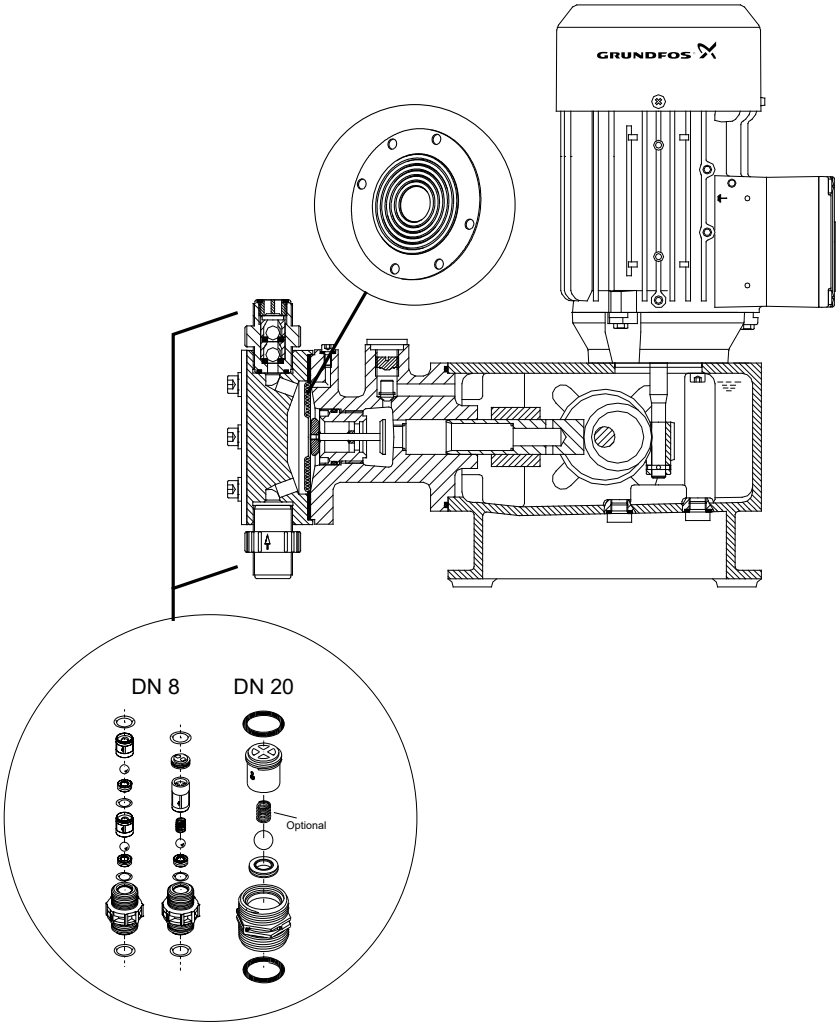

TM067972

DMX

DMX, 1 x 115-240V, 50/60Hz; 3 x 230/400V, 50Hz

Model 221, DN size 8

Nominal capacity [l/h]	Materials			Kit, maintenance [19]	1 valve (standard)	1 valve (spring-loaded)		Kit diaphragm	Kit dosing head
	Head / valve body	Gaskets	Balls			0.05 bar	0.8 bar		
04,8,16	PP	EPDM	PTFE	96375311	98803612	On req.	On req.	99145975	98981417
	PP	FKM	Ceramic	99079171	98803600	On req.	On req.	99145975	98981417
	PVDF	PTFE	PTFE	99079082	99042694	-	On req.	99145975	99040498
	PVC	EPDM	SS	99079250	98798541	-	On req.	99145975	98808112
	PVC	FKM	Ceramic	99079236	98798542	On req.	On req.	99145975	98808112
	PVC	FKM	SS	99079170	98798543	-	On req.	99145975	98808112
	PVC	EPDM	PTFE	99079172	98798548	-	On req.	99145975	98808112
	PVC	PTFE	Ceramic	99079183	98798549	-	-	99145975	98808112
	PVC	PTFE	PTFE	99079240	98798545	On req.	On req.	99145975	98808112
	SS	PTFE	SS	98969006	98798546	On req.	On req.	99145975	98969003
	SS	FKM	SS	99079252	98798547	-	On req.	99145975	98969003
07,14,27	PP	EPDM	PTFE	96617129	98803612	On req.	On req.	99145976	98981419
	PP	FKM	Ceramic	99079185	98803600	On req.	On req.	99145976	98981419
	PP	FKM	PTFE	On req.	98803599	-	-	99145976	98981419
	PVDF	PTFE	PTFE	99079085	99042694	-	On req.	99145976	99040499
	PVDF	PTFE	Ceramic	99079048	99042682	-	-	99145976	99040499
	PVC	EPDM	SS	99079251	98798541	-	On req.	99145976	98808114
	PVC	PTFE	PTFE	91835951	98798545	On req.	On req.	99145976	98808114
	PVC	FKM	Ceramic	99079184	98798542	On req.	On req.	99145976	98808114
	PVC	EPDM	Ceramic	98178426	98798550	On req.	On req.	99145976	98808114
	PVC	EPDM	PTFE	On req.	98798548	-	On req.	99145976	98808114
	PVC	PTFE	Ceramic	91835950	98798549	-	-	99145976	98808114
	PVC	FKM	SS	99079188	98798543	-	On req.	99145976	98808114
	SS	PTFE	SS	98969007	98798546	On req.	On req.	99145976	98969001
	SS	FKM	SS	99079284	98798547	-	On req.	99145976	98969001
09,18,35	PP	EPDM	SS	On req.	98803597	-	-	99145978	98981420
	PP	EPDM	PTFE	On req.	98803612	On req.	On req.	99145978	98981420
	PP	FKM	Ceramic	99079194	98803600	On req.	On req.	99145978	98981420
	PVDF	PTFE	Ceramic	99079050	99042682	-	-	99145978	-
	PVDF	PTFE	PTFE	99079076	99042694	-	On req.	99145978	-
	PVC	EPDM	Ceramic	99079244	98798550	On req.	On req.	99145978	98808115
	PVC	EPDM	SS	99079249	98798541	-	On req.	99145978	98808115
	PVC	FKM	Ceramic	99079237	98798542	On req.	On req.	99145978	98808115
	PVC	EPDM	PTFE	95729862	98798548	-	On req.	99145978	98808115
	PVC	PTFE	Ceramic	99079246	98798549	-	-	99145978	98808115
	PVC	PTFE	PTFE	91835954	98798545	On req.	On req.	99145978	98808115
	PVC	FKM	SS	99079196	98798543	-	On req.	99145978	98808115
	SS	PTFE	SS	98969008	98798546	On req.	On req.	99145978	98969000
	SS	FKM	SS	99079285	98798547	-	On req.	99145978	98969000

Nominal capacity [l/h]	Materials			Kit, maintenance [19]	1 valve (standard)	1 valve (spring-loaded)		Kit diaphragm	Kit dosing head
	Head / valve body	Gaskets	Balls			0.05 bar	0.8 bar		
12,26,50	PP	EPDM	SS	On req.	98803597	-	-	99145979	98981421
	PP	EPDM	PTFE	96375313	98803612	On- req.	On req.	99145979	98981421
	PP	PTFE	PTFE	On req.	98803596	-	-	99145979	98981421
	PP	FKM	Ceramic	99079214	98803600	On req.	On req.	99145979	98981421
	PP	FKM	PTFE	On req.	98803599	-	-	99145979	98981421
	PVDF	PTFE	PTFE	99079078	99042694	-	On req.	99145979	99040501
	PVDF	PTFE	Ceramic	99079081	99042682	-	-	99145979	99040501
	PVC	EPDM	SS	99079243	98798541	-	On req.	99145979	98808116
	PVC	EPDM	PTFE	96625626	98798548	-	On req.	99145979	98808116
	PVC	PTFE	PTFE	96645652	98798545	On req.	On req.	99145979	98808116
	PVC	FKM	Ceramic	99079233	98798542	On req.	On req.	99145979	98808116
	PVC	EPDM	Ceramic	On req.	98798550	On req.	On req.	99145979	98808116
	PVC	PTFE	Ceramic	91835958	98798549	-	-	99145979	98808116
	PVC	FKM	SS	99079234	98798543	-	On req.	99145979	98808116
	SS	PTFE	SS	98969009	98798546	On req.	On req.	99145979	98968995
	SS	FKM	SS	99079286	98798547	-	On req.	99145979	98968995

[19] Kit, maintenance may contain single parts or complete valve, depending on size and material.

Model 221, DN size 20

Nominal capacity [l/h]	Materials			Kit, maintenance [20]	1 valve (standard)	1 valve (spring-loaded) 0.6 bar	Kit diaphragm	Kit dosing head
	Head / valve body	Gaskets	Balls					
17,39,75	PP	EPDM	SS	On req.	98828466	-	99145995	98981423
	PP	EPDM	PTFE	On req.	98828458	98863249	99145995	98981423
	PP	PTFE	PTFE	On req.	98828467	-	99145995	98981423
	PP	FKM	Glass	99070223	98828459	98863250	99145995	98981423
	PVDF	PTFE	PTFE	99070226	98828464	98863254	99145995	99018339
	PVC	EPDM	SS	99069631	98828456	98863247	99145995	98808117
	PVC	FKM	Glass	99069632	98828457	98863248	99145995	98808117
	PVC	EPDM	Ceramic	On req.	98794843	-	99145995	98808117
	PVC	EPDM	PTFE	On req.	98828468	98863252	99145995	98808117
	PVC	PTFE	Ceramic	On req.	98828469	98863253	99145995	98808117
	PVC	PTFE	PTFE	On req.	98802208	-	99145995	98808117
	PVC	FKM	Ceramic	99070224	98828462	-	99145995	98808117
	PVC	FKM	SS	99070225	98828463	98863257	99145995	98808117
	SS	FKM	SS	98969010	98828465	98863255	99145995	98968996

Nominal capacity [l/h]	Materials			Kit, maintenance [20]	1 valve (standard)	1 valve (spring-loaded) 0.6 bar	Kit diaphragm	Kit dosing head
	Head / valve body	Gaskets	Balls					
25,60,115	PP	EPDM	Ceramic	99070260	98812760	-	99145996	98981424
	PP	EPDM	SS	On req.	98828466	-	99145996	98981424
	PP	EPDM	PTFE	On req.	98828458	98863249	99145996	98981424
	PP	FKM	Glass	99070261	98828459	98863250	99145996	98981424
	PVDF	PTFE	PTFE	99070259	98828464	98863254	99145996	99018340
	PVDF	PTFE	Ceramic	On req.	98812759	-	99145996	99018340
	PVC	EPDM	SS	99070257	98828456	98863247	99145996	98808118
	PVC	EPDM	PTFE	On req.	98828468	98863252	99145996	98808118
	PVC	FKM	Glass	99070258	98828457	98863248	99145996	98808118
	PVC	EPDM	Ceramic	On req.	98794843	-	99145996	98808118
	PVC	PTFE	Ceramic	On req.	98828469	98863253	99145996	98808118
	PVC	PTFE	PTFE	On req.	98802208	-	99145996	98808118
	PVC	FKM	Ceramic	99070262	98828462	-	99145996	98808118
	PVC	FKM	SS	99070263	98828463	98863257	99145996	98808118
	SS	PTFE	SS	98969011	98812758	98863256	99145996	98968997
	SS	FKM	SS	98969013	98828465	98863255	99145996	98968997

[20] Kit, maintenance may contain single parts or complete valve, depending on size and material.

Model 226, DN size 20

Nominal capacity [l/h]	Materials			Kit, maintenance [21]	1 valve (standard)	1 valve (spring-loaded) 0.6 bar	Kit diaphragm	Kit dosing head
	Head / valve body	Gaskets	Balls					
24, 52, 100, 142, 67, 132, 190	PP	EPDM	PTFE	98965726	98828458	98863249	98922727	98981423
	PP	PTFE	PTFE	98965727	98828467	-	98922727	98981423
	PP	FKM	Glass	98827346	98828459	98863250	98922727	98981423
	PP	EPDM	Ceramic	98827347	98812760	-	98922727	98981423
	PVDF	PTFE	PTFE	98923288	98828464	98863254	98922727	99018339
	PVDF	FKM	PTFE	98965741	98812757	-	98922727	99018339
	PVC	EPDM	PTFE	98923150	98828468	98863252	98922727	98808117
	PVC	FKM	Glass	98965724	98828457	98863248	98922727	98808117
	PVC	EPDM	SS	98965725	98828456	98863247	98922727	98808117
	PVC	PTFE	PTFE	98965728	98802208	-	98922727	98808117
	PVC	EPDM	Ceramic	98965729	98794843	-	98922727	98808117
	PVC	FKM	Ceramic	98827341	98828462	-	98922727	98808117
	PVC	PTFE	Ceramic	98965730	98828469	98863253	98922727	98808117
	PVC	FKM	SS	98827342	98828463	98863257	98922727	98808117
	SS	EPDM	SS	98827233	98812756	-	98922727	98968996
	SS	FKM	SS	98965743	98828465	98863255	98922727	98968996
	SS	PTFE	SS	98827234	98812758	98863256	98922727	98968996

Nominal capacity [l/h]	Materials			Kit, maintenance [21]	1 valve (standard)	1 valve (spring-loaded) 0.6 bar	Kit diaphragm	Kit dosing head
	Head / valve body	Gaskets	Balls					
37, 82, 160, 224, 95, 199, 280	PP	EPDM	PTFE	98965766	98828458	98863249	98922728	98981424
	PP	PTFE	PTFE	98965746	98828467	-	98922728	98981424
	PP	FKM	Glass	98965748	98828459	98863250	98922728	98981424
	PP	EPDM	Ceramic	98827747	98812760	-	98922728	98981424
	PP	EPDM	SS	98965749	98828466	-	98922728	98981424
	PVDF	PTFE	PTFE	98923304	98828464	98863254	98922728	99018340
	PVDF	PTFE	Ceramic	98965752	98812759	-	98922728	99018340
	PVC	PTFE	PTFE	98965744	98802208	-	98922728	98808118
	PVC	FKM	Glass	98965745	98828457	98863248	98922728	98808118
	PVC	EPDM	SS	98923302	98828456	98863247	98922728	98808118
	PVC	EPDM	PTFE	96688839	98828468	98863252	98922728	98808118
	PVC	EPDM	Ceramic	98965765	98794843	-	98922728	98808118
	PVC	FKM	Ceramic	98827244	98828462	-	98922728	98808118
	PVC	PTFE	Ceramic	98965750	98828469	98863253	98922728	98808118
	PVC	FKM	SS	98827343	98828463	98863257	98922728	98808118
	SS	EPDM	SS	98965753	98812756	-	98922728	98968997
	SS	FKM	SS	98965754	98828465	98863255	98922728	98968997
	SS	PTFE	SS	98827235	98812758	98863256	98922728	98968997
60, 130, 255, 380, 152, 321, 460	PP	EPDM	PTFE	98965763	98828458	98863249	98922729	98981425
	PP	PTFE	PTFE	98965755	98828467	-	98922729	98981425
	PP	FKM	Glass	98827741	98828459	98863250	98922729	98981425
	PP	EPDM	Ceramic	98827742	98812760	-	98922729	98981425
	PP	EPDM	SS	98965756	98828466	-	98922729	98981425
	PP	FKM	SS	98965758	98812755	-	98922729	98981425
	PVDF	PTFE	PTFE	98923307	98828464	98863254	98922729	99018341
	PVC	FKM	Glass	98871195	98828457	98863248	98922729	98808120
	PVC	EPDM	SS	98923306	98828456	98863247	98922729	98808120
	PVC	EPDM	PTFE	98965759	98828468	98863252	98922729	98808120
	PVC	PTFE	PTFE	98965760	98802208	-	98922729	98808120
	PVC	EPDM	Ceramic	98965761	98794843	-	98922729	98808120
	PVC	FKM	Ceramic	98827344	98828462	-	98922729	98808120
	PVC	PTFE	Ceramic	98965762	98828469	98863253	98922729	98808120
	PVC	FKM	SS	98827345	98828463	98863257	98922729	98808120
	SS	EPDM	SS	98827236	98812756	-	98922729	98968998
	SS	FKM	SS	98871199	98828465	98863255	98922729	98968998
	SS	PTFE	SS	98827237	98812758	98863256	98922729	98968998

21) Kit, maintenance may contain single parts or complete valve, depending on size and material.

Model 226, DN size 32

Nominal capacity [l/h]	Materials			Kit, maintenance [22]	1 valve (standard)	1 valve (spring-loaded) 0.6 bar	Kit diaphragm	Kit dosing head
	Head / valve body	Gaskets	Balls					
249, 315, 525, 765	PP	EPDM	PTFE	98871180	98803613	-	98922730	98981426
	PP	FKM	Glass	98871191	98803614	On req.	98922730	98981426
	PVDF	PTFE	PTFE	98871196	98802232	On req.	98922730	99018342
	PVC	PTFE	PTFE	98871192	98802210	-	98922730	98808121
	PVC	FKM	Glass	98871193	98812754	On req.	98922730	98808121
	PVC	EPDM	SS	98871194	98802231	-	98922730	98808121
	SS	FKM	SS	98871197	98802234	On req.	98922730	98969004
	SS	PTFE	SS	98871198	98802235	-	98922730	98969004

22) Kit, maintenance may contain single parts or complete valve, depending on size and material.

Model 227, DN size 65

Nominal capacity [l/h]	Materials			Kit, maintenance [23]	1 valve (inlet side)	1 valve (outlet side)	Kit diaphragm	Kit dosing head
	Head / valve body	Gaskets	Balls					
430, 860, 1120	PP	FKM	PP	96688805	98926688	98927589	99145973	On req.
	PVC	FKM	PVC	91835856	98926673	98927590	99145973	On req.
	SS	FKM	SS	96688806	98927584	98927601	99145973	On req.
770, 1520, 2000	PP	FKM	PP	96688807	98926688	98927589	99145974	On req.
	PVC	EPDM	PVC	91835859	98927585	98927602	99145974	On req.
	PVC	FKM	PVC	91835858	98926673	98927590	99145974	On req.
	SS	FKM	SS	96688808	98927584	98927601	99145974	On req.

23) Kit, maintenance may contain single parts or complete valve, depending on size and material.

Cables and connectors

Application		Type	Pins	Coding	Straight/angled	Cable length	Other	Kit No
Input	Analog contact for remote switch	Plug connector	4	Groove (nut)	Straight	2	-	96609014
						5	-	96609016
						Plug only	-	96698715
					Angled	2	-	96693246
Output	Error relay stroke or pre-empty relay	Plug connector	4	Tappet	Straight	2	-	96609017
						5	-	96609019
						Plug only	-	96696198
					Angled	2	-	96698716
Input	Empty	Flat plug connector	2	Alldos-type	Straight	Plug only	Soldered cable	96679388
Input	(Pre-)empty	Flat plug connector	3	Alldos-type	Straight	Plug only	Soldered cable	96630345
Adaptor flat-round	(Pre-)empty	Plug connector	4	Groove (nut)	Straight	Plug only	-	96635010

DMX lubricant kits

The kits include maintenance parts like gaskets, oil filter etc.

Model	Nominal capacity	Variant	Description	Kit No
221	All	-	Kit grease, approx. 0.2 kg	98727125
226L	All	Single head	Kit grease, approx. 0.8 kg	98727126
226M	All	Single head	Kit grease, approx. 0.6 kg	98727129
226M/2	All	Double head	Kit grease, approx. 0.6 kg	98727129
227	All	Single head	Kit hydraulic oil, approx. 5.0 l (DHG68)	98683958
227/2	All	Double head	Kit hydraulic oil, approx. 7.5 l (DHG68)	98683959

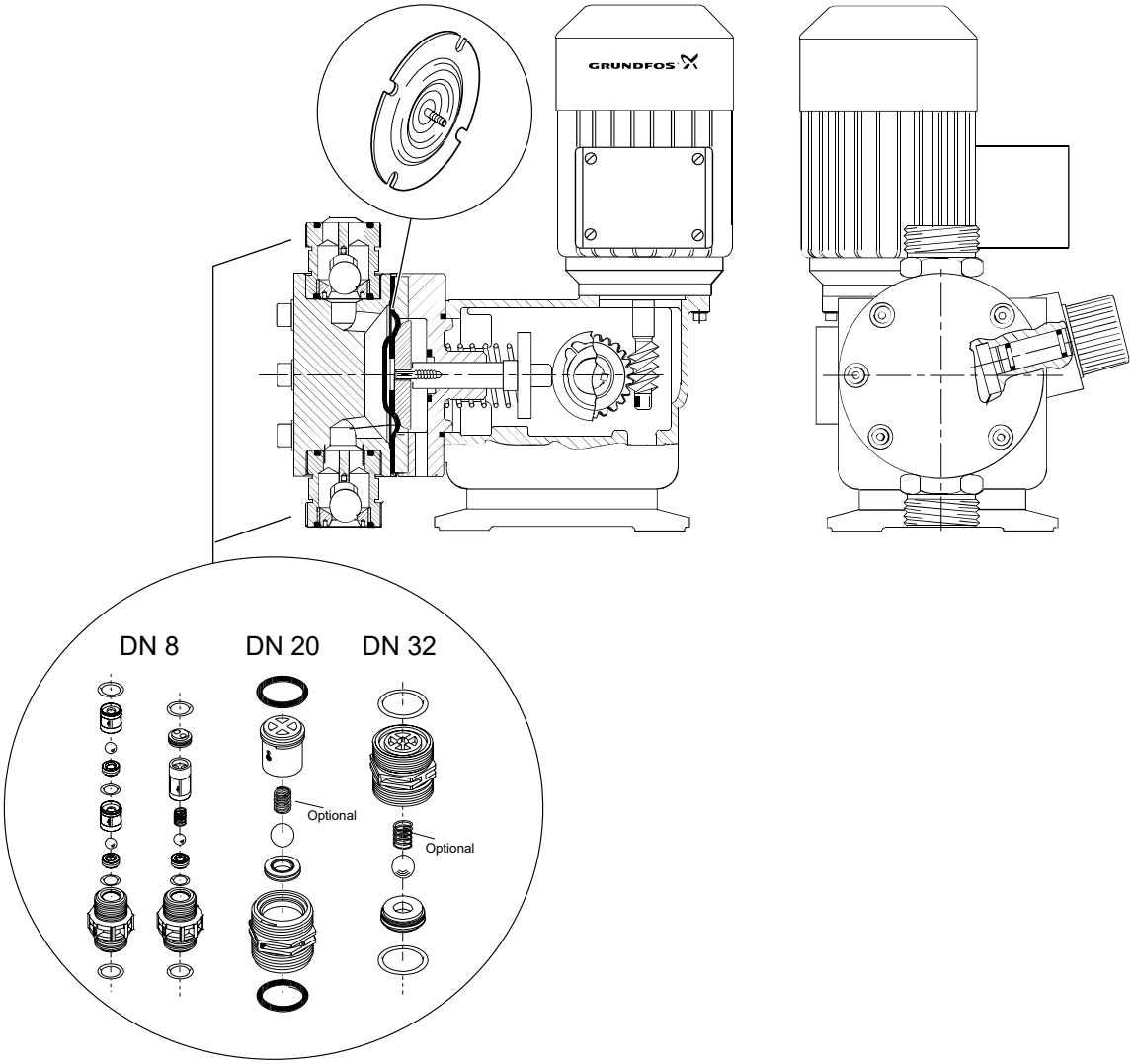

TM067973

Accessories for dosing pumps

Spare parts for pressure loading/relief valves

Spare parts for PLV and PRV

Max. flow [l/h]	Connection size [inch]	Kit description	Kit No.
60	G 5/8	3 x O-ring FKM 3 x O-ring EPDM 1 x diaphragm 1 x pressure spring 1 x thrust pad 1 x adjusting screw	99369777
		3 x O-ring PTFE/FKM 1 x diaphragm PTFE/ EPDM 1 x pressure spring 1 x thrust pad 1 x adjusting screw	99369778
460	G 5/4	3 x O-ring EPDM 3 x O-ring FKM 1 x diaphragm 1 x compression spring 1 x thrust pad pressure valve 1 x spring cup	99367773
		3 x O-ring PTFE/FKM 1 x diaphragm 1 x compression spring 1 x thrust pad pressure valve 1 x spring cup	99367774

Spare parts for pressure loading/relief valves DN 20 G 5/4 (old type)

Valve PN	Kit description	Kit No.
91835674 96295888 96295889 99141197 96295890 99131032 96295891 96295892 99141228 96295903 96295904 96295905 99132186 96295906 96295907 96376567 96693421 96693603 99132186 99170747 96693604 99131032 96693704 96693705 99141197 96695973 96727370 96727383 96727384	3 x O-ring FKM 3 x O-ring EPDM 1 x diaphragm 1 x pressure spring 1 x thrust pad 1 x adjusting screw	99369868
96618727 99140651 96699704 99141224 96727369 99140593	3 x O-ring PTFE/FKM 1 x diaphragm 1 x pressure spring 1 x thrust pad 1 x adjusting screw	99369869

Spare parts for pressure loading/relief valves DN 32 (old type)

Valve PN	Kit description	Kit No.
96295893 99367200 99370958 96295894 96295895 96295896 96295897 96295908 96295909 96295910 96295911 96295912 96652055 96695695 96695696 99367198 96695919 96695954 96698322 99370957 96699612 96727371 96727379 96727380 96727381 96727385	2 x O-ring FKM 2 x O-ring EPDM 1 x diaphragm 1 x pressure spring 1 x thrust pad 1 x screw part 1 x sliding ring	99369870
96692234 99367203	2 x O-ring FEP/FKM 1 x diaphragm 1 x pressure spring 1 x thrust pad 1 x screw part 1 x sliding ring	99369871

Spare parts for pressure loading valves DN 32 G2

Valve PN	Kit description	Kit No.
99367198 99367200	2 x O-ring FKM 2 x O-ring EPDM 1 x diaphragm set	93284469
99367199	2 x O-ring PTFE 1 x diaphragm set	93284481
99367204	1 x diaphragm	93284500
99367201	2 x O-ring FKM 2 x O-ring EPDM 1 x diaphragm set 1 x form foil 1 x piston set	93284484
99367203	2 x O-ring PTFE 1 x diaphragm set 1 x form foil 1 x piston set	93284488

Service tools for dosing pumps

Profi tester

The Profi tester is a special tool to check the inputs and outputs of Grundfos dosing pumps.

Description	Kit No
Profi tester	*99600937*

Hydraulic test unit

The hydraulic test unit is used to check the hydraulic performance of Grundfos dosing pumps up to 10 bar and capacity up to 200 l/h.

Description	Kit No
Hydraulic test unit (max. 200 l/h, max. 10 bar)	*99600938*

Vaccuperm system

Overview of components

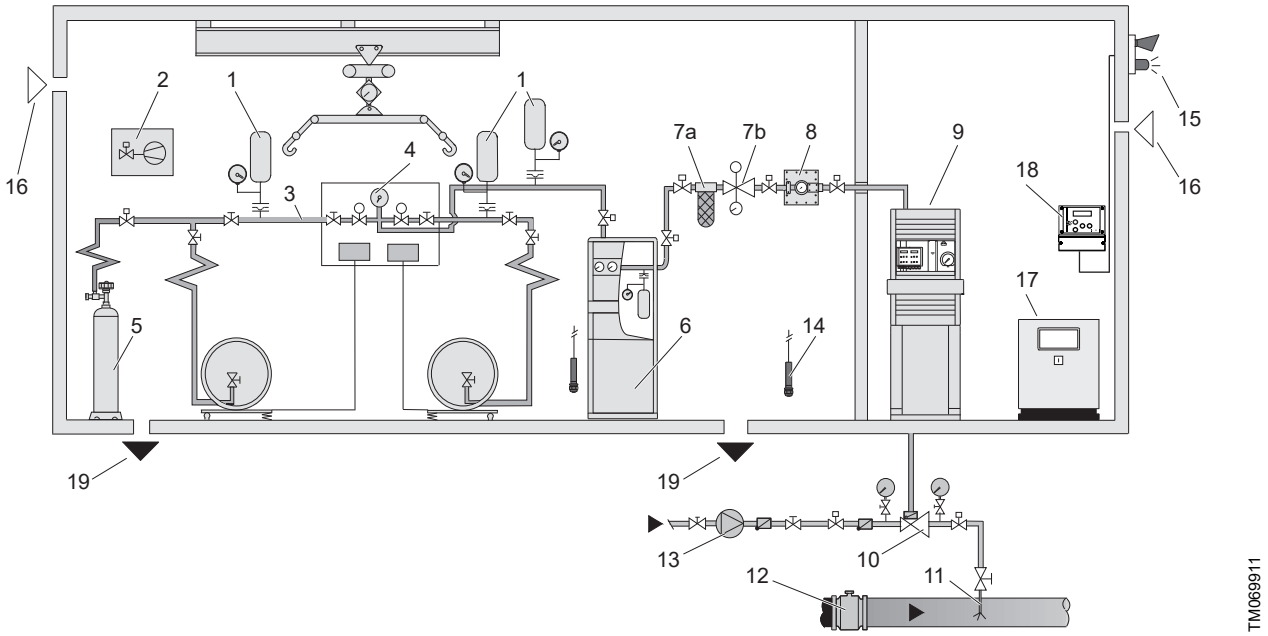

Pos.	Description	For kits see page
1	Expansion tank	*Expansion tank*
2	Safety stop valve	*Safety stop valve*
3	Header line (manifold)	*Header line (manifold)*
-	Flat gasket sets	*Flat gasket sets*
4	Change-over device	*Change-over device*
5	Nitrogen rinsing device	
6	Evaporator	*Evaporator*
7a	LiquFilt (heated liquid trap with filter)	*LiquFilt*
7b	Pressure reducing valve	*Pressure reducing valve*
8	Vacuum regulator	*Vacuum regulators VGA-111, VGA-146, VGS-147, VGS-148*
-	Vacuum connections	*Vacuum connections and lines*
9	Dosing regulator	*Dosing regulators VGA-113, VGA-117, VGS-141, VGS-143, VGS-145*
-	Compact dosing unit VBG-103	*Compact dosing unit VGB-103*
10	Gas injector	*Gas injector*
11	Injection unit	*Injection unit*
-	Chlorine gas adsorption filter	*Chlorine gas adsorption filter*
12	Flowmeter	
13	Motive water booster pump	
14	Chlorine gas sensor	
15	Optical and acoustic alarm devices	
16	Ventilation of the building	
17	Central control panel	
18	Gas warning system	
19	Vent to chlorine gas neutralisation system	

Related information

Vaccuperm service kits

Vaccuperm service kits

Expansion tank

Type	Kit description	Medium	Kit No
Expansion Tank	Bursting disk	Chlorine	95718356
	Bursting disk support	-	95718357

Safety stop valve

Type	Kit description	Medium	Kit No
543-010	Gasket set	Chlorine	96729679

Header line (manifold)

Kit description	Version	Medium	Kit No
Copper line	1 m	Chlorine	99356968
	2 m		99356984
Flat gasket set for copper line	200 pieces	all	99055003
Stainless steel line	1 m	NH_3/SO_2	99357021
	1.5 m		99357023
Connection valve complete	G 5/8	Chlorine	96688688
		NH_3/SO_2	96688694
	G 3/4	Chlorine	96688687
		NH_3/SO_2	96688693
	1"	Chlorine	96690367
		NH_3/SO_2	96688692
	1.03-14	Chlorine	96688689
	5/4"	Chlorine	96690368
		NH_3/SO_2	96688695

Flat gasket sets

Kit description	Version	Kit No
Flat gasket set for connection valve and pressurized gas connection of 103, 111 and 146	1", 200 pieces	99055005
	USA, 100 pieces	99353632
	M26x3, 100 pieces	99353631
	1 1/4", 100 pieces	99353630
	for ext. filter, 100 pieces	99353629
	for liquid trap, 25 pieces	99353628
Flange gasket set for 147 and 148	DN25	96688979

Change-over device

Type	Kit description	Medium	Kit No
185-1	Gasket set	Chlorine	96688979
185-2 (with bypass)			
186-120	Ball valve	Chlorine	95720552
189-010	Gasket set	Chlorine	91835829
189-010	Gasket set	NH_3/SO_2	96688791

Evaporator

Type	Kit description	Medium	Kit No
171W (water-heated)	Gaskets, copper line, bursting disk	Chlorine	95705524
	Gasket set	Chlorine	96688864
171 (oil-heated)	Gaskets, copper line, bursting disk	Chlorine	95705522
	Gasket set	Chlorine/NH_3/SO_2	96688715
	Gaskets heating flange	Chlorine/NH_3/SO_2	96729530

LiquFilt

Type	Kit description	Medium	Kit No
524-2x	Spare filters and gasket	Chlorine	91835919

Pressure reducing valve

Maintenance kits

Type	Version	Medium	Kit No
544-101-x	G1/2, DN15	Chlorine	96688978
544-1017-x	G1/2, DN15	NH_3/SO_2	95709195
544-210-x	G1/2, DN15, Servomotor	Chlorine	96688978
544-2107-x	G1/2, DN15, Servomotor	NH_3/SO_2	95709195
544-102-x	G1, DN25	Chlorine	91835913
544-1027-x	G1, DN25	NH_3/SO_2	91835914
544-220-x	G1, DN25, Servomotor	Chlorine	91835913
544-2207-x	G1, DN25, Servomotor	NH_3/SO_2	91835914

Vacuum regulators VGA-111, VGA-146, VGS-147, VGS-148

Type	Version	Kit description	Medium	Kit No
VGA-111	111-202, 4 kg/h without liquid trap	Service kit	Chlorine	91835972
VGA-111	111-102	Service kit	Chlorine	96689047
VGA-111	111-202, all versions	Service kit		96688860
VGA-111	111-202, 4 kg/h with liquid trap	Service kit	Chlorine	91835977
VGA-111	-	Diaphragm (4 pieces)	Chlorine	99220809
VGA-111	-	Diaphragm service kit	Chlorine	98025823
VGA-111	-	Valve cone silver (4 pieces)	Chlorine	99220811
VGA-111	111-202, 4 kg/h without liquid trap	Service kit	$NH_3/SO_2/CO_2$	96689051
VGA-111	-	Manometer G 1/4	Chlorine	96688685
VGA-146	Without liquid trap	Service kit	$NH_3/SO_2/CO_2$	96688781
	With liquid trap	Service kit		96688782
VGA-146	Without liquid trap	Service kit	Chlorine	91836513
	With liquid trap	Service kit		91835842
VGA-146	-	Diaphragm	all	99351261

Type	Version	Kit description	Medium	Kit No
VGA-146	-	Valve cone (4 pieces)	Chlorine	99220811
VGS-147	-	Service kit	Chlorine	96688764
VGS-147	-	Service kit	NH_3	96688787
VGS-147	-	Service kit	SO_2	
VGS-147	-	Diaphragm	all	99351261
VGS-148	70 kg/h	Service kit	Chlorine	96688765
VGS-148	120 kg/h	Service kit	Chlorine	96688766
VGS-148	200 kg/h	Service kit	Chlorine	96688767
VGS-148	100 kg/h	Service kit	NH_3	96688790
VGS-148	190 kg/h	Service kit	SO_2	

Vacuum connections and lines

Kit description	Version	Kit No
Spare, pipe connection DN10, 12/16 mm	O-ring material FKM	99358522
Spare, pipe connection DN15, 15/20 mm		99358518
Spare, hose connection, 1/2 NPT		99358527
Spare, hose connection, 8/11 mm		99358520
Spare, hose connection, 10/14 mm		99358521
Spare, hose connection, 12/16 mm		99358523
Spare, pipe connection DN15, 15/20 mm	O-ring material EPDM	99358526
Spare, hose connection, 10/14 mm		99358519
Spare, hose connection, 8/11 mm		99358524
PE-hose 8/11 mm, full vacuum	10 m	96701705
	25 m	96695982
PE-hose 10/14 mm, full vacuum	10 m	91836646
	25 m	96727466

Dosing regulators VGA-113, VGA-117, VGS-141, VGS-143, VGS-145

Type	Version	Kit description	Medium	Kit No
VGA-113	Geco 113-110	Gasket set	Chlorine	91835973
VGA-113	-	Gasket set	Chlorine	91835974
VGA-113	-	Gasket set	$NH_3/SO_2/CO_2$	96689053
VGA-113	-	Diaphragm, screws, spring, O-rings	Chlorine	96688861
VGA-113	-	Diaphragm (4 pieces)	all	99220809
VGA-113	-	Diaphragm service kit	Chlorine	96680603
VGA-117	Geco	Gasket set	Chlorine	91835976
VGA-117	Geco	Gasket set	$NH_3/SO_2/CO_2$	96689050
VGA-117	-	Gasket set	Chlorine	95725112
VGA-117	-	Diaphragm	all	99351261
VGS-141	200, 500 g/h	Gaskets, diaphragms, grease	Chlorine	96729331
VGS-141	1000 g/h - 10 kg/h	Gaskets, diaphragms, grease	Chlorine	96688759
VGS-141	-	Diaphragm	all	99351261
VGS-143	40 kg/h	Gaskets, diaphragms, grease	Chlorine	96688761
VGS-145	200 kg/h	Gaskets, diaphragms, grease	Chlorine	96688763

Compact dosing unit VGB-103

Type	Version	Kit description	Medium	Kit No
VGB-103	until 12-2005	Maintenance	Chlorine	91835975
VGB-103	103-100 from 01-2006	Maintenance	Chlorine	96688961
VGB-103	-	Diaphragm (4 pieces)	Chlorine	99220809
VGB-103	-	Diaphragm service kit	Chlorine	98025823

Gas injector

PVC injector - GECO series

Kits include diaphragm, seat, piston, gaskets

Type	Suction capacity [kg/h]	Backpressure [bar]	Medium	Kit No
545-51x; 545-52x	0-0.5	0-7	Chlorine	91835846
545-10x	0.5-1			
545-20x	1-2			

High pressure injector

Kits include ball, seat, piston, gaskets

Type	Suction capacity [kg/h]	Backpressure [bar]	Medium	Kit No
545-138x	0.5-2	16-25	Chlorine	96688796
545-138x.1	0.5-2	5-16	Chlorine	96688797

PVC injector

Kits include diaphragm, seat, piston, gaskets

Type	Suction capacity [kg/h]	Backpressure [bar]	Medium	Kit No
545-0501-x; 545-1001-x; 545-2001-x	0.5-2	7-10	Chlorine	95715145
545-xxxx-1; 545-xxxx-2; 545-xxxx-3; 545-xxxxx-1; 545-xxxxx-2; 545-xxxxx-3	0.5-4	0-7	Chlorine	96688748
545-x095-x	1-4	0-7	Chlorine	96729511
545-3099x	3	0.5-6.5	Chlorine	95701435
545-4099x	4	0-3		
545-x03x	3-10	0-7	Chlorine	96688795
545-x519-x	4-10	0-10	Chlorine	96688738
545-6030x	6-8	0-7	Chlorine	91835847
545-8030x	8-10	0-7		
545-10030x	10	0-3		
545-x518-x	10	0-7	Chlorine	96688738

Type	Suction capacity [kg/h]	Backpressure [bar]	Medium	Kit No
545-x615	10-20	0-10	Chlorine	*96688740*
545-x715	40	0-7	Chlorine	*96688741*
545-x816	70	0-8	Chlorine	*96688743*
545-x916	90-120	0-7	Chlorine	*96688745*
545-x016	150-200	0-7	Chlorine	*96688747*
545-xxxx-17; 545-xxxx-27; 545-xxxx-37; 545-xxxxx-37; 545-xxxxx-17	0.5-2	0-7	NH_3/SO_2	*95701437*
545-x6157	6-20	0-10	NH_3/SO_2	*96688739*
545-x7157	20-40	0-7	NH_3/SO_2	*96688742*

Injection unit

Steel version with diaphragm valve

Injection unit PN	Type	Flange	Kit description	Kit No
96727321	522-30 2	DN 25	3 x gasket 1 x diaphragm	*99368785*
96727322	522-31 2	DN 32	3 x gasket 1 x diaphragm	*99368786*
96727319	522-26 4	DN 50	3 x gasket 1 x diaphragm	*99368787*
96727320	522-27 4	DN 65	3 x gasket 1 x diaphragm	*99368789*
96727318	522-25 4	DN 80	3 x gasket 1 x diaphragm	*99368790*

Chlorine gas adsorption filter

Type	Kit description	Medium	Kit No
524-3x	Refilling package 4 kg	Chlorine	*96688989*

Safety equipment

Gas mask, chlorine gas

Gas mask PN	Kit description	Info	Kit No
96727010 (515-401)	Filter	DIN EN 14387	*96688099*

Oxiperm Pro OCD-162

Maintenance kits Oxiperm Pro OCD-162 (5-60 g/h)

Oxiperm Pro OCD-162 (5 g/h)

Oxiperm Pro OCD-162-5	Dosing pump for chlorine dioxide	Product No.
until June 2012	mechanical and digital	95702445
	without	95702446
from June 2012 until July 2016	SMART Digital DDA	98153636
	without	98153651
from August 2016	SMART Digital DDA	99136353
	without	99136354

Oxiperm Pro OCD-162 (10 g/h)

Oxiperm Pro OCD-162-10	Dosing pump for chlorine dioxide	Product No.
until June 2012	mechanical DMI	95702500
	digital DDI	95707853
	without	95702499
from June 2012 until July 2016	SMART Digital DDA	98153962
	without	98153966
from August 2016	SMART Digital DDA	99136355
	without	99136356

Oxiperm Pro OCD-162 (30 g/h)

Oxiperm Pro OCD-162-30	Dosing pump for chlorine dioxide	Product No.
until June 2012	mechanical DMX	95717915
	digital DDI	95717916
	without	95717917
after June 2012	mechanical DMX	98162637
	digital DDI	98162644
	without	98162647

Oxiperm Pro OCD-162 (60 g/h)

Dosing pumps for hydrochloric acid and sodium chlorite	Dosing pump for chlorine dioxide	Product No.
DMX (all years)	mechanical DMX	95717919
	digital DDI	95717920
	without	95717921
DDE (after 03-2012, only 115 V)	digital DDI	98382087
	without	98382297

Spare parts Oxiperm Pro OCD-162 (5-10 g/h)

Part	Description	Version	Product No.
Dosing pump for HCl	230 V	DDE 10-6, complete	98163454
	115 V, USA cable		98163456
Dosing pump for $NaClO_2$	230 V		98163419
	115 V, USA cable		98163440
Dosing pump for ClO_2	230 V	DDA, complete	98163484
	115 V, USA cable		98163486
Suction lance for HCl	for 30-litre container	complete	98163672
	for 55-gallon container		98163679
Suction lance for $NaClO_2$	for 30-litre container		98163639
	for 55-gallon container		98163678
Hose PTFE 4/6,transparent	to reaction tank / to volume compensation bag	1.5 m	96727482
		10 m	96692437
Hose PE 6/9	to solenoid valve	10 m	96727412
Hose PVC 6/12			96653571
Hose PVC 8/11, transparent	for reaction tank drain	1.25 m	95717381
Connection PVC G 5/8 female/hose set	for suction lances	U2 metric connection set for Europe, PVC, for hoses: 4/6, 6/9, 6/12, 9/12	97691903
Connection PVDF G 5/8 female/hose set	for dosing line of multi-function valve	U2 metric connection set for Europe, PVDF, for hoses: 4/6, 6/9, 6/12, 9/12	97691904
Connection G 5/8 female/hose set	for dosing line of multi-function valve, USA	U7 connection set USA, PVDF, for hoses: 1/8 x 1/4, 1/4 x 3/8, 3/8 x 1/2	97691907
Connection G 1/4 male/hose 4/6	to input of reaction tank	2 pieces	95717382
Solenoid valve for dilution water	230 V	without screw connections	95717903
	115 V		95717904
Level indicator of reaction tank	-	4 switching points	99327316
Level indicator of batch tank	-	2 switching points	95717906
Reaction tank with batch tank	OCD-162-5	complete	95717907
	OCD-162-10		95717911
Ball valve at the batch tank	-	1 piece	95717384
Volume compensation bag	-	1 piece	95717908
Activated carbon filter	-	1 piece	95717909
Valve at the activated carbon filter	inlet and outlet valve	2 pieces	95717436
Multi-function valve	-	complete	95704598
Cover	-	complete	95717438
Electronic controller, 230 V	OCD-162-5	complete	95715737
Electronic controller, 115 V		complete	95715738
Electronic controller, 230 V	OCD-162-10	complete	95715740
Electronic controller, 115 V		complete	95715741
Strainer	for input of solenoid valve	5 pieces	95717437
System frame	-	-	98163701
T-piece for PTFE hose 4/6	to volume compensation bag	1 piece	95714891
Set of hoses 4/6, with connections	for suction lances	red and blue, 1.5 m each	98163781
Connection pieces between connection for hose and solenoid valve.	G 5/8 female/hose 6/9 for input of solenoid valve	1 complete set	95727673
	PE hose 1/4 x 3/8 for input of solenoid valve, USA		95727674
	G 5/8 female/hose 4/6 for output of solenoid valve		95727672
Connection for hoses 6/9 and 6/12	for input of solenoid valve	-	95717385
Connection for PE hose 1/4 x 3/8, USA		-	95717528
Connection G 3/8 female/hose 4/6	for output of solenoid valve	2 pieces	95717529
Connection G 5/8 female/hose 4/6	for internal connections	5 pieces	99026031
Non-return valve	for dosing line	2 pieces	98165354
Fastening set	hose clamps and screws	-	95717531

Spare parts Oxiperm Pro OCD-162-30, -60

Parts	Description		Version	Product No.
Dosing pump for $NaClO_2$	OCD-162-30	230 V	DDE 15-4	98163904
		115 V, USA cable		98163921
Dosing pump for HCl		230 V		98163923
		115 V, USA cable		98163925
Dosing pump for ClO_2		230 V	DMX	99435426
		115 V, USA cable		99436459
		115-230 V	DDI	95754516
		115 V, USA cable		95754517
Dosing pump for HCl	OCD-162-60	230 V	DMX	95717388
		115 V, USA cable	DDE 15-4	98163925
Dosing pump for $NaClO_2$		230 V	DMX	95717389
		115 V, USA cable	DDE 15-4	98163921
Dosing pump for ClO_2		115-230 V	DDI	95754516
		115 V, USA cable		95754517
Suction lance for HCl	for 60-litre container		complete	98164260
	for 55-gallon container			98163679
	for 200-/1000-litre container			98164293
Suction lance for $NaClO_2$	for 60-litre container			98164258
	for 55-gallon container			98163678
	for 200-/1000-litre container			98164291
Hose PTFE 9/12	for internal connection		1.5 m	96727489
Hose PE 6/9	to solenoid valve		10 m	96727412
Hose PVC 6/12				96653571
Hose PVC 8/11	for drain of reaction tank		1.25 m	95717381
Connection PVC G 5/8 female/hose set	for suction lances		U2 metric connection set for Europe, PVC, for hoses: 4/6, 6/9, 6/12, 9/12	97691903
Connection PVDF G 5/8 female/hose set	for dosing line of multi-function valve		U2 metric connection set for Europe, PVDF, for hoses: 4/6, 6/9, 6/12, 9/12	97691904
Connection G 1/4 male/hose 4/6	from output of reaction tank		2 pieces	95717382
Solenoid valve for dilution water	230 V		without screw connections	99958495
	115 V			99958528
Diaphragm for solenoid valve dilution water	-		-	99287149
Level indicator of reaction tank	OCD-162-30		4 switching points	95717446
Level indicator of batch tank			2 switching points	95717447
Reaction tank with batch tank			complete	95717448
Level indicator of reaction tank	OCD-162-60		4 switching points	95717455
Level indicator of batch tank			2 switching points	95717456
Reaction tank			complete	95717457
Batch tank				95717458
Ball valve at the batch tank	-		1 piece	95717384
Volume compensation bag	-		1 piece	95717449
Adsorption filter	-		1 piece	95717450
Valve at the adsorption filter	inlet and outlet valve		2 pieces	95717436
Multi-function valve	-		complete	95704598
Cover	-			95717438
Foot cover	-			95717443
Electronic controller, 230 V	OCD-162-30			95715743
Electronic controller, 115 V				95715744
Electronic controller, 230 V	OCD-162-60			95715745
Electronic controller, 115 V				95715746
Strainer	for input of solenoid valve		5 pieces	95717437
System frame	-		-	95717451
Foot	-		-	95717452

Parts	Description	Version	Product No.
Hose PTFE 4/6, white	to volume compensation bag	1.5 m	96727482
T-piece for PTFE hose 4/6		1 piece	95714891
Connection pieces between connection for hose and solenoid valve.	G 5/8 male/G 1/4 male for input of solenoid valve	1 complete set	95723465
	G 1/4/G 5/8 male for output of solenoid valve		95723463
Connection for PE hose 6/9	for input of solenoid valve	-	95717385
Connection for PE hose 1/4 x 3/8, USA		-	98165337
Non-return valve	for dosing line	2 pieces	98165354
Connection G 5/8 female/hose 9/12	for internal connections	5 pieces	98165381
Fastening set	OCD-162-30 hose clamps and screws	-	95717459
	OCD-162-60 hose clamps and screws	-	95717460
Pipe elbow	at input of reaction tank	-	95717386

Oxiperm system
Oxiperm OCC-164 and OCD-164

Oxiperm OCC-164 (150-2500 g/h) and OCD-164 (30-2000 g/h) maintenance kits and spare parts

Description	OCC-164					OCD-164								Kit No
	164-150C	164-450C	164-750C	164-1300C	164-2500C	164-030D	164-120D	164-220D	164-350D	164-700D	164-1000D	164-1500D	164-2000D	
Dosing tubes for HCl and $NaClO_2$														
DN 4 (red) for HCl	X	X	X			X	X	X						*96688871*
DN 4 (blue) for $NaClO_2$	X	X	X			X	X	X						*96688872*
DN 8 (transparent) for HCl, $NaClO_2$				X	X				X	X	X	X	X	*96688873*
Foot valves														
Union nut, grey PVC (10 pieces)	X	X	X	X	X	X	X	X	X	X	X	X	X	*99205816*
Valve seat, grey PVC (10 pieces)	X	X	X	X	X	X	X	X	X	X	X	X	X	*99345588*
Ball, ceramic (10 pieces)	X	X	X	X	X	X	X	X	X	X	X	X	X	*99186335*
Foot valve DN 4	X	X	X			X	X	X						*95730320*
Foot valve DN 8				X	X				X	X	X	X	X	*95730321*
Weighting stone, KER 1101	X	X	X	X	X	X	X	X	X	X	X	X	X	*99345589*
Dosing controller														
Flowmeter DN 4														*99345603*
Flowmeter DN 4, size code on housing: 04	X	X				X	X							*99345604*
Flowmeter DN 4, size code on housing: 1			X					X						*99345605*
Flowmeter DN 8, size code on housing: 2	X								X					*99345606*
Flowmeter DN 8, size code on housing: 3				X										*99345607*
Flowmeter DN 8, size code on housing: 5		X	X		X					X	X			*99345608*
Flowmeter DN 8, size code on housing: 7				X								X	X	*99345609*
Label set														
Warning label, HCl label, $NaClO_2$ label	X	X	X	X	X	X	X	X	X	X	X	X	X	*99349364*
Temperature sensor														
Temperature sensor	X	X	X	X	X									*99349380*
O-ring (5 pieces)	X	X	X	X	X									*99185811*
Orifice for sensor, PTFE/carbon with O-ring	X	X	X	X										*99349381*
Reactor (3 x valves)														
For system backpressure lower than 3 bar														*96689070*
For system backpressure higher than 3 bar														*96689072*
For system backpressure lower than 3 bar						X	X	X						*91836549*
For system backpressure higher than 3 bar						X	X	X						*96689071*
For system backpressure lower than 3 bar									X	X	X	X	X	*91836550*
For system backpressure higher than 3 bar									X	X	X	X	X	*96689073*
For system backpressure lower than 3 bar	X	X	X											*96689074*
For system backpressure higher than 3 bar	X	X	X											*96689075*
For system backpressure lower than 3 bar				X										*96689076*
For system backpressure higher than 3 bar				X										*96689077*
For system backpressure lower than 3 bar					X									*96689078*
For system backpressure higher than 3 bar					X									*96689079*
Bypass, standard version with solenoid valve														
Solenoid valve 230 V, with flow limiter 8 l/min						X	X	X	X					*99345326*
Solenoid valve 115 V, with flow limiter 8 l/min						X	X	X	X					*99345328*
Solenoid valve 230 V, with flow limiter 16 l/min										X	X	X	X	*99345329*
Solenoid valve 115 V, with flow limiter 16 l/min										X	X	X	X	*99345331*
Flow limiter 8 l/min	X	X				X	X	X	X					*99345332*
Flow limiter 16 l/min			X	X	X					X	X	X	X	*99345343*
Flowmeter FHKU 100	X	X	X	X	X	X	X	X	X	X	X	X	X	*99345347*

Description	OCC-164					OCD-164								Kit No
	164-150C	164-450C	164-750C	164-1300C	164-2500C	164-030D	164-120D	164-220D	164-350D	164-700D	164-1000D	164-1500D	164-2000D	
Bypass pump														
Bypass pump 230 V, bypass internal	X	X	X	X	X	X	X	X	X	X	X	X	X	96913085
Solenoid valve														
Solenoid valve 230 V, 50 Hz	X	X	X	X	X	X	X	X	X	X	X	X	X	99349639
Solenoid valve 115 V, 60 Hz	X	X	X	X	X	X	X	X	X	X	X	X	X	99349640
Batch														
Flowmeter FHKU 100				X	X						X	X	X	91834753
Flowmeter FHKU 56		X	X						X	X				95712071
Flowmeter FHKU 25	X							X						91836499
Flowmeter FHKU 20							X							96681088
Flowmeter FHKU 15						X								91836552
Flowmeter FHKU 10														96681089
PVC solenoid valve 230 V, 50/60 Hz	X	X	X	X	X	X	X	X	X	X	X	X	X	96688597
PVC solenoid valve 115 V, 50/60 Hz	X	X	X	X	X	X	X	X	X	X	X	X	X	91836553
Pressure-retention valve DN 8	X	X	X			X	X	X						95730742
Pressure-retention valve DN 20				X	X				X	X	X	X	X	96376567
Suction injection for enclosure exhausting option														
Spare part set injector 545	X	X	X	X	X	X	X	X	X	X	X	X	X	96688748
Diffuser B complete						X	X	X						91834747
Diffuser C complete	X	X	X	X	X				X	X	X	X	X	91834748
Nozzle B						X	X	X						96681070
Nozzle C	X	X	X	X	X				X	X	X	X	X	91834743

Oxiperm OCC-164 (150-10000 g/h) maintenance kits for one year

Oxiperm type	Date of manufacture [MM/YYYY]	Variant	Pressure	Kit No
164-150C	until 12/2003	-	up to 3 bar	96729640
	until 12/2003	-	more than 3 bar	96729639
	from 01/2004 until 03/2012	-	up to 3 bar	96689100
	from 01/2004 until 03/2012	-	more than 3 bar	96689101
	from 04/2012	-	up to 3 bar	98363493
	from 04/2012	-	more than 3 bar	98363496
164-450C	until 12/2003	-	up to 3 bar	96729642
	until 12/2003	-	more than 3 bar	96729641
	from 01/2004 until 03/2012	-	up to 3 bar	99594985
	from 01/2004 until 03/2012	-	more than 3 bar	99595055
	from 04/2012	-	up to 3 bar	98363499
	from 04/2012	-	more than 3 bar	98363500
164-750C	until 12/2003	-	up to 3 bar	96729644
	until 12/2003	-	more than 3 bar	96729643
	from 01/2004 until 03/2012	-	up to 3 bar	99595006
	from 01/2004 until 03/2012	-	more than 3 bar	99595057
	from 04/2012	-	up to 3 bar	98363501
	from 04/2012	-	more than 3 bar	98363502
164-1300C	until 12/2003	-	up to 3 bar	96729646
	until 12/2003	-	more than 3 bar	96729645
	from 01/2004 until 03/2012	-	up to 3 bar	99595020
	from 01/2004 until 03/2012	-	more than 3 bar	99595666
	from 04/2012	-	up to 3 bar	98363503
	from 04/2012	-	more than 3 bar	98363504

Oxiperm type	Date of manufacture [MM/YYYY]	Variant	Pressure	Kit No
164-2500C	until 12/2003	-	up to 3 bar	96729648
	until 12/2003	-	more than 3 bar	96729647
	from 01/2004 until 03/2012	-	up to 3 bar	99595039
	from 01/2004 until 03/2012	-	more than 3 bar	99595667
	from 04/2012	-	up to 3 bar	98363505
	from 04/2012	-	more than 3 bar	98363506
164-4000C and 164-6000C	from 01/2004 until 03/2012	230 V and 115 V	-	99595668
	from 04/2012	-	-	98363507
164-7500C	from 01/2004 until 03/2012	115 V	-	99595672
	from 04/2012	115 V	-	98363509
	from 01/2004 until 03/2012	230 V	-	99595670
	from 04/2012	230 V	-	98363508
164-10000C	from 01/2004 until 03/2012	230 V and 115 V	-	99595671
	from 04/2012	230 V and 115 V	-	98363510

The package includes maintenance kit for dosing pump.

Oxiperm OCD-164 (30-2000 g/h) maintenance kits for one year

Oxiperm type	Date of manufacture [MM/YYYY]	Variant	Pressure	Kit No
164-030D 164-120D	until 12/2003	with calibration system	up to 3 bar	91836528
	until 12/2003	with calibration system	more than 3 bar	96729585
	from 01/2004 until 03/2012	with calibration system	up to 3 bar	99594274
	from 01/2004 until 03/2012	with calibration system	more than 3 bar	99594904
	from 01/2004 until 03/2012	-	up to 3 bar	99594978
	from 01/2004 until 03/2012	-	more than 3 bar	99594934
	from 04/2012	with calibration system	up to 3 bar	98363408
	from 04/2012	with calibration system	more than 3 bar	98363422
	from 04/2012	-	up to 3 bar	98363426
	from 04/2012	-	more than 3 bar	98363427
164-220D	until 12/2003	-	up to 3 bar	96729587
	until 12/2003	-	more than 3 bar	96729586
	from 01/2004 until 03/2012	with calibration system	up to 3 bar	99594871
	from 01/2004 until 03/2012	with calibration system	more than 3 bar	99594905
	from 04/2012	with calibration system	up to 3 bar	98363429
	from 04/2012	with calibration system	more than 3 bar	98363434
	from 01/2004 until 03/2012	-	up to 3 bar	99594954
	from 01/2004 until 03/2012	-	more than 3 bar	99594919
	from 04/2012	-	up to 3 bar	98363436
	from 04/2012	-	more than 3 bar	98363438
164-350D	from 01/2004 until 03/2012	with calibration system	up to 3 bar	99594884
	from 01/2004 until 03/2012	with calibration system	more than 3 bar	99594906
	from 04/2012	-	up to 3 bar	98363440
	from 04/2012	-	more than 3 bar	98363461
164-700D	until 12/2003	-	up to 3 bar	96729592
	until 12/2003	-	more than 3 bar	96729591
	from 01/2004 until 03/2012	with calibration system	up to 3 bar	99594885
	from 01/2004 until 03/2012	with calibration system	more than 3 bar	99594912
	from 04/2012	-	up to 3 bar	98363462
	from 04/2012	-	more than 3 bar	98363463
164-1000D	from 01/2004 until 03/2012	with calibration system	up to 3 bar	99594886
	from 01/2004 until 03/2012	with calibration system	more than 3 bar	99594914
	from 04/2012	-	up to 3 bar	98363464
	from 04/2012	-	more than 3 bar	98363465

Oxiperm type	Date of manufacture [MM/YYYY]	Variant	Pressure	Kit No
164-1500D	from 01/2004 until 03/2012	with calibration system	up to 3 bar	*99594892*
	from 01/2004 until 03/2012	with calibration system	more than 3 bar	*99594908*
	from 04/2012	-	up to 3 bar	*98363466*
	from 04/2012	-	more than 3 bar	*98363467*
164-2000D	from 01/2004 until 03/2012	with calibration system	up to 3 bar	*99594903*
	from 01/2004 until 03/2012	with calibration system	more than 3 bar	*99594911*
	from 04/2012	-	up to 3 bar	*98363469*
	from 04/2012	-	more than 3 bar	*98363470*

The package includes maintenance kit for dosing pump.

Oxiperm OCC-164 (150-2500 g/h) and OCD-164 (30-2000 g/h) maintenance kits for dosing pumps

	Pump	Voltage [V]	Medium	Kit No
164-150C	208-1.0	230	HCl	96641420
			$NaClO_2$	
		115	HCl	
			$NaClO_2$	
	221-16	230	H_2O	91835948
		115		
164-450C	208-3.0	230	HCl	96641420
			$NaClO_2$	
		115	HCl	
			$NaClO_2$	
	221-16	230	H_2O	91835948
		115		
164-750C	208-6.0	230	HCl	91835902
			$NaClO_2$	
		115	HCl	
			$NaClO_2$	
	221-27	230	H_2O	91835950
		115		
164-1300C	221-16	230	HCl	91835948
			$NaClO_2$	
		115	HCl	
			$NaClO_2$	
	221-50	230	H_2O	96645652
		115		
164-2500C	221-16	230	HCl	91835948
			$NaClO_2$	
		115	HCl	
			$NaClO_2$	
	253-100	230	H_2O	91836270
164-030D	208-1.0	230	HCl	96641420
			$NaClO_2$	
		115	HCl	
			$NaClO_2$	
164-120D	208-3.0	230	HCl	96641420
			$NaClO_2$	
		115	HCl	
			$NaClO_2$	
164-220D	208-6.0	230	HCl	91835902
			$NaClO_2$	
		115	HCl	
			$NaClO_2$	
164-350D	221-16	230	HCl	91835948
			$NaClO_2$	
		115	HCl	
			$NaClO_2$	
164-700D	221-16	230	HCl	91835948
			$NaClO_2$	
		115	HCl	
			$NaClO_2$	

	Pump	Voltage [V]	Medium	Kit No
164-1000D	221-27	230	HCl	91835950
			$NaClO_2$	
		115	HCl	
			$NaClO_2$	
164-1500D	221-35	230	HCl	91835954
			$NaClO_2$	
		115	HCl	
			$NaClO_2$	
164-2000D	221-50	230	HCl	96645652
			$NaClO_2$	
		115	HCl	
			$NaClO_2$	

Fuses for control panel

Type	Comment	Kit No
Set of fuses	For all systems	96688774

24) Fine fuses 5x20, inert: 0.1 A, 1 A, 6.3 A, 10 A, four of each size

Selcoperm system

Selcoperm SES 125-2000

Selcoperm electrolyser - spare parts

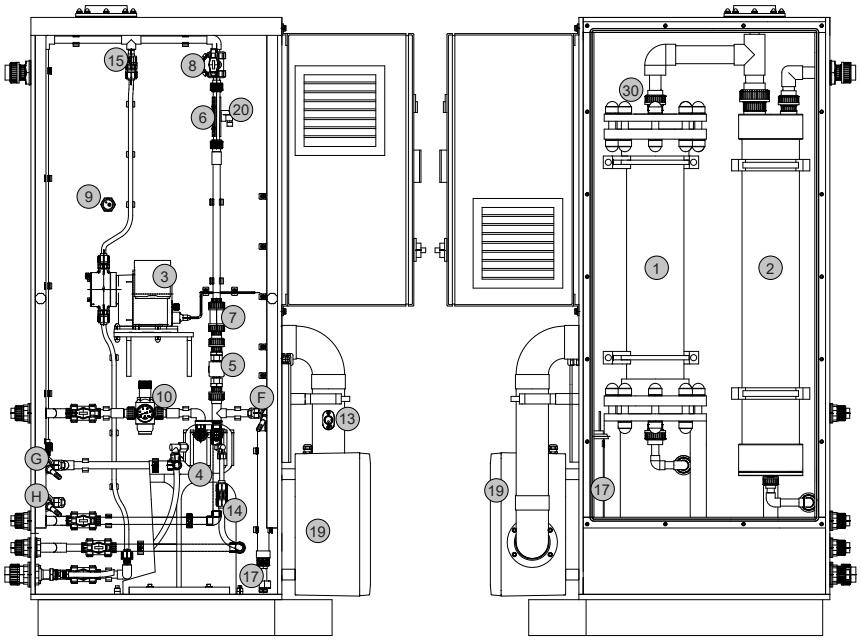

	Product No.	Description	Pos.	Product No.	Description
1	98056656	Electrolysis cell (SES-125)	7	25)	Non-return valve
	98056729	Electrolysis cell (SES-250)	8	98058475	Water flow adjustment valve
	98056755	Electrolysis cell (SES-500)	9	95727178	Degassing column level sensor
	98056757	Electrolysis cell (SES-1000)	10	99710160	Pressure reducing valve
	98056760	Electrolysis cell (SES-2000)	13	95727177	Air flow sensor
2	99710914	Degassing column (SES-125, -250, -500)	14	25)	Brine valve water softener
	99710946	Degassing column (SES-1000, -2000)	15	25)	Brine injection valve
3	97721401	Brine pump (SES-125, -250, -500)	17	99710263	Internal tray flood switch
	97722252	Brine pump (SES-1000, -2000)	19	95727154	Air dilution fan (SES-125, -250, -500)
4	95724306	Water softener		95727155	Air dilution fan (SES-1000, -2000)
5	95723503	Water solenoid valve	20	95727192	Bi-stable flowmeter switch
6	95727171	Flowmeter (SES-125)	30	95727185	Cell temp. sensor max. 70 °C
	95727172	Flowmeter (SES-250)			
	95727173	Flowmeter (SES-500)			
	95727174	Flowmeter (SES-1000)			
	95727175	Flowmeter (SES-2000)			

25) see Maintenance kits SES 125-2000

Related information

Control cabinet - spare parts

Control cabinet - spare parts

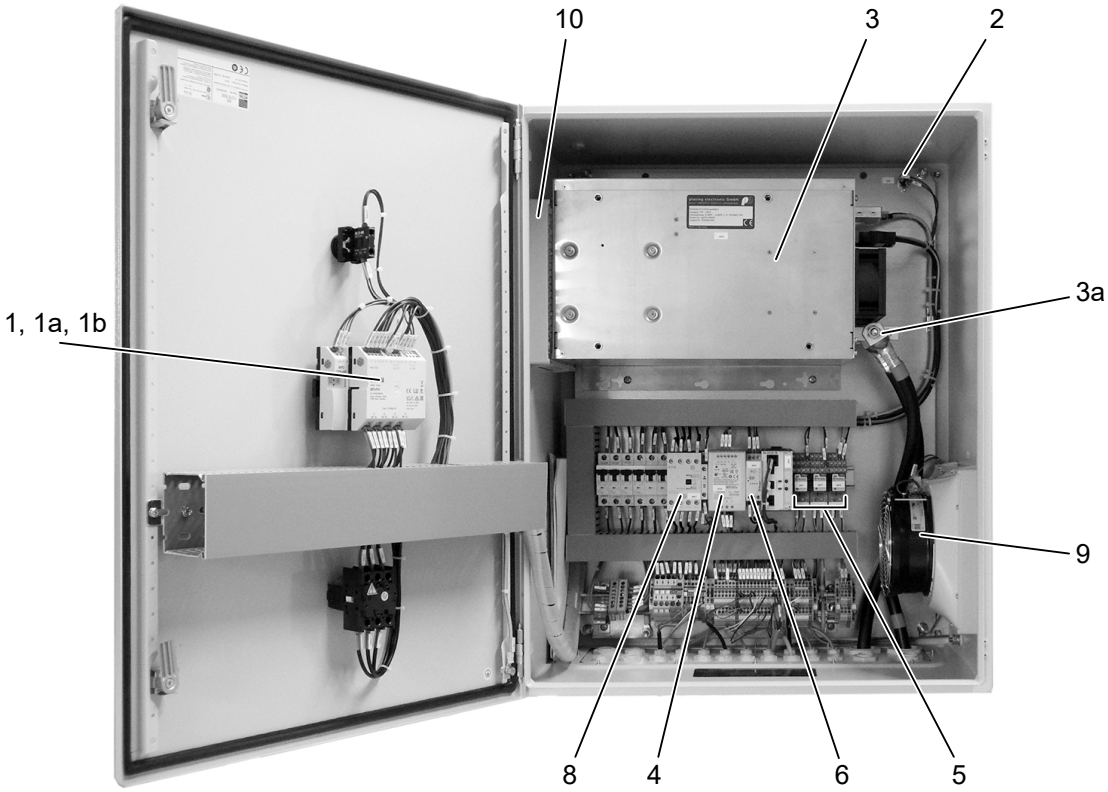

TM061815

Pos.	Product No.	Description
1	*95729982*	Logic controller, language English
1a	*95729979*	Display graphic
2	*95727184*	Temperature sensor
3	*98710813*	Electrolyser power supply (SES-125)
	98710815	Electrolyser power supply (SES-250)
	98710816	Electrolyser power supply (SES-500)
	98710817	Electrolyser power supply (SES-1000)
	98710819	Electrolyser power supply (SES-2000)
3a	-	DC connections from power supply to electrolysis cell
4	*98059618*	Power supply internal
5	*98059659*	Relay
6	*98059686*	Timer relay
8	*98059653*	Alarm Relay (SES-125, -250, -500, -1000)
	98059655	Alarm Relay (SES-2000)
9	*98059565*	Fan for enclosure (SES-125, -250, -500)
	98059610	Fan for enclosure (SES-1000, -2000)
10	*98059643*	Fan filter

Maintenance kits SES 125-2000

The maintenance kit includes parts for maintenance after two years (maintenance kit for brine pump and for Selcoperm).

Description	Kit No
Maintenance kits for systems until 2010	
Selcoperm 125-500	*95702281*
Selcoperm 1000-2000	*95702282*
Maintenance kits for systems from 2011	
Selcoperm 125-500	*98045877*
Selcoperm 1000-2000	*98045899*
Maintenance kits for systems from 04-2012	
Selcoperm 125-500	*98047506*
Selcoperm 1000-2000	*98047507*
Maintenance kits for systems from 40-2019	
Kit, valves for SES 125-2000, comprising Brine valve water softener (14), double ball valve. Brine injection valve (15), spring loaded valve.	*99710096*
Kit, brine pump for SES 125-500	*97751474*
Kit, brine pump for SES 1000-2000	*97751510*
Kit, O-rings and gaskets for SES 125-2000	*98531493*

Acid cleaning kit

For cleaning the electrolyser cell in case of deposits.

Description	Kit No
Manual acid pump and connection hose	*95702377*

Brine tank for salt saturation - spare parts

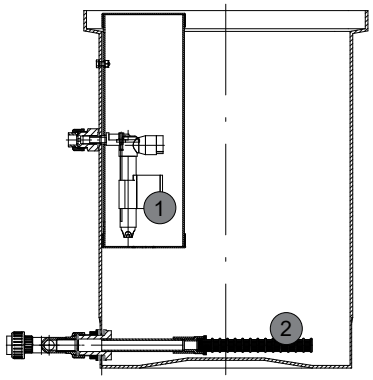

TM041506

Pos.	Product No.	Description
1	*98955389*	Side entry valve
2	*99787348*	3/4" lateral filter

NaClO solution storage tank - spare parts

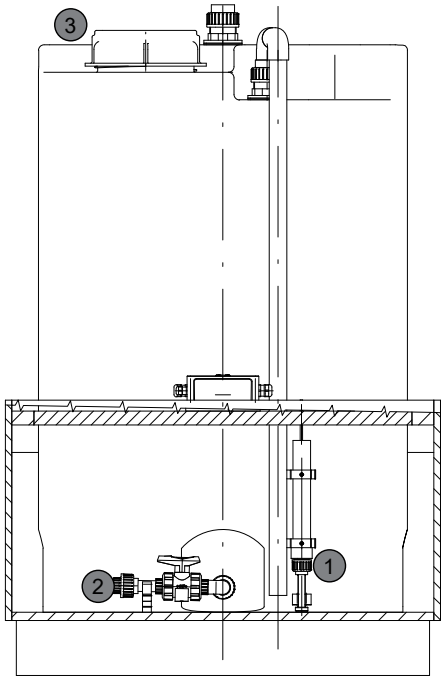

TM041595

Pos.	Product No.	Description
1	*99710406*	Tray flood switch
2	*95721859*	Pressure level sensor 0-10 V
3	*99706163*	Lock, tank cap, tank size 300-1000 l
	99703008	Lock, tank cap, tank size 2000-5000 l

Selcoperm SES 5000-45000

Selcoperm O-ring kits

Description	For SES type							Kit No
	5000	7500	10000	15000	20000	30000	45000	
O-ring kit for piping (NaClO outlet and T-piece)	X	X	X					99047273
				X				99047275
					X	X	X	99055042
O-ring kit for hydraulic chamber	X	X	X	X				99047280
					X	X	X	99055044
O-ring kit for electrolysis cell(s)	X	X						99047281
			X	X				99047284
					X	X		99055047
							X	99055048

Selcoperm electrolysis cells

Description	For SES type							Product number
	5000	7500	10000	15000	20000	30000	45000	
Electrolysis cell 1 - 5000 g/h	X		X		X			99047026
Electrolysis cell 2 - 5000 g/h			X		X			99047028
Electrolysis cell 1 - 7500 g/h		X		X		X	X	99047031
Electrolysis cell 2 - 7500 g/h				X		X	X	99047033
Electrolysis cell 3 - 7500 g/h							X	99054997

Brine dosing station

These maintenance kits comprise the diaphragm and valve parts for the maintenance of the brine pumps in the brine dosing station. One kit is required for each pump.

For SES type	Version	Pump type	Kit No
5000	until week 23-2017	DDI AF 150-4	96634524
	from week 24-2017	DDA FCM 200-4	99151341
7500	until week 23-2017	DDI AF 150-4	96634524
	from week 24-2017	DDA FCM 200-4	99151341
10000	until week 23-2017	DDI AF 150-4	96634524
	from week 24-2017	DDA FCM 200-4	99151341
15000	until week 23-2017	DME AR 375-10	96520380
	from week 24-2017	DDA FCM 200-4	99151341
20000	-	DME AR 375-10	96520380
30000	-	DME AR 940-4	96520391
45000	-	DME AR 940-4	96520391

Acid cleaning station

The maintenance kit comprises the diaphragm and valve parts for the maintenance of the acid cleaning pump in the acid cleaning station.

Acid cleaning station PN	Pump type	Medium	Kit No
98865693	DMX 460-3.5 (95750148)	HCl / citric acid	98871195

Selcoperm Accessories

Test kit for SES

Description	Kit No
Test kit for SES, comprising: • Measuring cylinder • Total hardness test for titrimetric determination of the water hardness • Thermometer • Spindle for density measurement • Titration set for measurement of the chlorine concentration in the sodium hypochlorite solution • Operating instructions	98842487

Spare parts for test kit

Description	Product number
Hydrometer	98504212
Thermometer	98708063
Stirring rod	95727771
Dispenser tip, 5 pcs	99619798
Total hardness test kit	98948745
Set of 100 Acidifying GP tablets and 100 Chlorine HR tablets	98144705
Set of 30 ml titrant (2N sodium thiosulfate solution ($Na_2S_2O_3$)) and dispenser tip	99619819

Selcoperm e-commissioning kit

Description	Kit No
Selcoperm E-Commissioning kit, comprising: • PC TOOL Link USB with cables • Cable for Varmeca FU • Adaptor for Draeger Regard 3900/3920 • Belimo Service Tool (ZTH and ZK4-Gen) • Cable USB 2.0 Type-A M -> Type -Micro-B M • Cable PATCHCABLE 2x RJ45 CAT5E 3M • USB - 32 GB / GWTS	99481722

Polydos

Polydos 412A spare parts

Description	For type PD412A	Product No.
Metering screw	500/1000/2000	98502332
	4000/6000	98503705
	10000	98503704
Pressure reducing valve	500/1000	95734792
	2000	98421613
	4000/6000	95719774
	10000	98421615
Solenoid valve	500/1000	95706390
	2000	95706391
	4000/6000	95710313
	10000	98421611
Stirrer on chamber I	500	98421991
	1000	95716817
	2000	95716820
	4000/6000	95716824
	10000	95716829
Stirrer on chamber II/III	500	98421990
	1000	95716818
	2000	95716821
	4000	95716825
	6000/10000	95716827
Water flow meter	2000	99058275
	4000/6000/10000	99058279

Measurement & control

AquaCells D1, D2, D3, D11, D12, D13

Electrodes, buffers

Buffer solution

Type	Info		Kit No
pH buffer	pH 4.01, pH 7, pH 9.18	3 x 100 ml	96609165
Redox buffer	+220 mV	-	96609166
KCl, 3 M	For the storage of electrodes		96688696

Distribution box

Type	Kit No
Distribution box	91835294

Electrodes, pH

Type	Version	Temp.	Pressure	Kit No
Electrode ceraminc	pH 1-12	-5 to +80 °C	6 bar	96609158
Electrode	pH 1-12	-5 to +80 °C	10 bar	96609161
Electrode PTFE diaphragm	pH 1-12	0 to +80 °C	6 bar	96609159
Electrode KCL tank	pH 0-12	-5 to +80 °C	0 - 6 bar	95707720

Electrodes, Redox

Type	Version	Temperature	Pressure	Kit No
Electrode cermanic	-	-5 to +80 °C	6 bar	96609162
Electrode	Only for DIP	-5 to +80 °C	6 bar	96622944
Electrode PTFE diaphragm	± 1500 mV	-5 to +80 °C	6 bar	96609163

H_2O_2

Type	Version	Comment	Kit No
Measuring electrode	Complete	Including electrolyte	96622973
Diaphragm	Incl. electrolyte	-	96622974
Electrolyte	H_2O_2	-	96622975
Cable	-	Length: 2 m	91835331

Peracetic acid

Type	Version	Comment	Kit No
Diaphragm	Incl. electrolyte	-	96622962
Electrolyte	Peracetic acid	-	96622966
Cable	-	Length: 2 m	91835331

Cables for measuring cells

Type	Version	Length	Kit No
DIA, DIP			
Signal cable, 4(0)-20 mA	Single screening 2-wire	1 m	96687719
		2 m	96725671
		10 m	96725670
		20 m	96725672
		50 m	96725673
Conex sensor interface	Single screening 4-wire	1 m	96635553
		5 m	96611925
		15 m	96611928
		25 m	96611929
Measuring cells			
Cable measuring electrode	D12, D13, 314-6xx, -9xx	1.2 m	96687722
Cable measuring electrode	D12, D13, 314-6xx, -9xx	2 m	96687723
Electrode cable [26]	Electrode connector N	1 m	96609182
Electrode cable [26]	Electrode connector N	3 m	96609183
Cable counter electrode	D11, 314-1xx, -2xx, -3xx	1 m	96687765
Cable counter electrode	D11, 314-1xx, -2xx, -3xx	3 m	91835333
Cable measuring electrode	D1, D2, D3	1 m	96609184
Cable measuring electrode	D1, D2, D3	3 m	96609185
Diaphragm measuring cells			
Sensor cable	PAA	2 m	91835331
Sensor cable	H_2O_2	2 m	91835331

[26] Coaxial

Spare parts for measuring cells

Type	Version	Medium	Kit No					
			D11, 314-1xx -2xx -3xx	D1	D13, 314-6xx	D3	D12, 314-9xx	D2
Reference electrode	Gold	Chlorine	91835242	-	-	-	-	-
Reference electrode	Platinum	Chlorine	91835244	-	-	-	-	-
Reference electrode		Chlorine	-	96609174	96609174	96609174	96609174	96609174
Measuring electrode	Gold	Chlorine	91835242	96609175	91835855	96609175	96690373	96609175
Measuring electrode	Platinum	Chlorine	91835244	96609176	96688836	96609176	96688868	96609176
Cleaning blade			-	96609181	-	96622950	-	96622950
Cleaning blade + sealing			-	-	96657349	-	96690372	-
Stirring magnet, sealing, balls, washer			91835822	-	-	-	-	-
Gaskets			-	96609171	-	96609171	-	96609171
Sample-water filter			96681072	91834713	91834713	91834713	91834713	91834713
Sample-water sensor	3 m		96609173	96609173	91835355	96609173	96609173	96609173
Sample-water sensor	1 m		96609172	96609172	96687939	96609172	96609172	96609172
Pt100	Temperature measurement, 1 m		96687987	-	96697322	-	96687987	-
Pt100	Temperature measurement, 3 m		99432138	-	91834712	-	99432138	-
Pressure-retention valve	0.3 bar outlet		99253231	99253231	-	-	99253231	99253231
Kit, counter electrode for AQC-D11			99314386	-	-	-	-	-
Kit, cleaning motor AQC-D11, 230/240V			99232699	-	-	-	-	-
Kit, cleaning motor AQC-D11, 115/120V			99967442	-	-	-	-	-
Kit, cover for magnet compl. for AQC-D11			98936013	-	-	-	-	-

Conex DIA-1, DIA-2, DIA-2Q

Type	Version	Kit No
Sensor interface	For panel-mounted amplifiers	96681059

DID

Replacement sensors

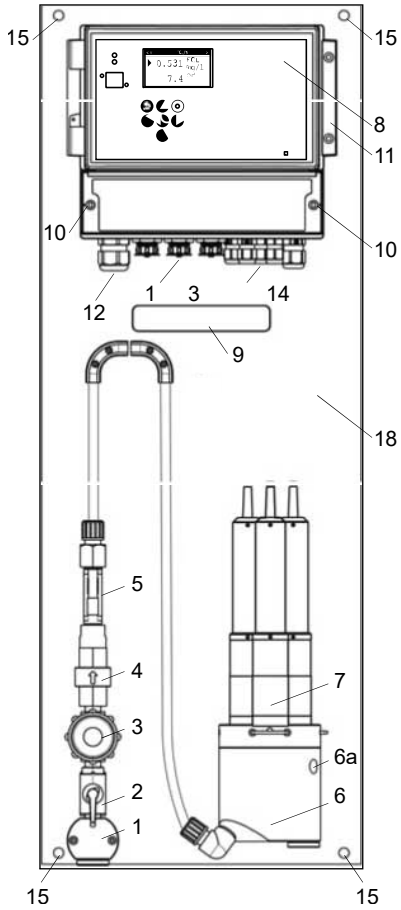

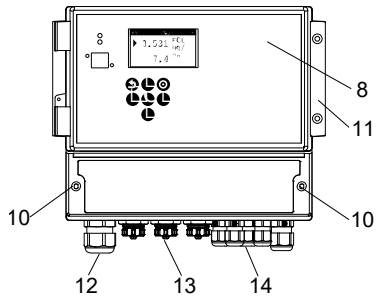

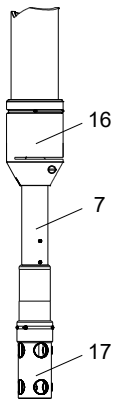

Replacement sensor for parameter	Sensor type	Part No
Free chlorine (FCl)	0-2ppm E507	98915674
Free chlorine (FCl)	0-2ppm, E-520	99290639
Free chlorine (FCl)	0-20ppm, E-520	99290641
Total chlorine (TCl)	0-20ppm, E-507	98915677
Total chlorine (TCl)	0-2ppm, E-525	99290664
Total chlorine (TCl)	0-2ppm, E-525	99290665
Chlorine dioxide (CDI)	0-2 ppm	98915678
Chlorine dioxide (CDI)	0-20 ppm	98915679
Hydrogen peroxide (HP)	0-200 ppm	98915680
Hydrogen peroxide (HP)	0-2000 ppm	98915681
Peracetic acid (PA)	0-200 ppm	98915682
Peracetic acid (PA)	0-2000 ppm	98915683
pH	pH 2-12	98915684
pH	pH 2-12 tank	98915685
ORP	-2000 mV to +2000 mV	98915686
ORP	-2000 mV to +2000 mV tank	98915687
Conductivity (CND)	1-500000 µS/cm (2-42 PSU)	98915688
Conductivity (CND)	1-500000 µS/cm (2-42 PSU) tank	98915689
Turbidity	0-800 FTU/NTU	99852646
Turbidity Total organic carbon (TOC) Dissolved organic carbon (DOC) UV254 absorption	0-800 FTU/NTU 0-25 mg/l 0-25 mg/l 0-70 Abs/m	99852649
Sensor hub for CU382		99852650

Maintenance kits for disinfectant sensors

Maintenance kits for disinfectant sensors include a bottle of electrolyte and a membrane cap.

Maintenance kit for parameter	Sensor type [27]	Kit No
Free chlorine (FCl)	E507 1/2	99074494
	E520	99290666
Total chlorine (TCl)	E507 3/4	99074495
	E525	99290667
Chlorine dioxide (CDI)		99074496
Hydrogen peroxide (HP)		99074497
Peracetic acid (PA)		99074498

[27] Can be found on the sensor

Maintenance kits for pH and ORP sensors

Maintenance kits for pH and ORP sensors include an electrode to replace the one included in the sensor.

Maintenance kit for parameter	Kit No
pH	99074499
ORP	99074500

Hydraulic connectors for DIDs with bypass flow cell

Description	Kit No
2 x adaptor G 1/2” to connection size G 5/8 2 x connection kit PVC U2 2 x connection kit PVC U7 1 x deaeration spindle for flow cell 1 x nozzle for sample water outlet	*99258903*

KCl solution for safe storage of pH and ORP sensors

Description	Kit No
Bottle of KCl solution for safe storage of pH and ORP sensors, 250 ml	*96688696*

Buffer solution kit for pH sensor calibration

Description	Kit No
Buffer solution kit, 3 x 100 ml (pH 4.01, pH 7 and pH 9.18)	*96609165*

Maintenance kit for bypass flow cell assembly

Maintenance kit	Kit No
PE hose (6/8 mm), 2 m Maintenance kits for bypass flow cell assembly BF1, BF3 and BT4 include a replacement hose. The hose must be cut to the required length.	*95709109*

Maintenance kit for the cleaning assembly for optical sensors

Maintenance kit	Kit No
Spare brush for cleaning assembly Maintenance kits for the cleaning assembly for optical sensors include a spare brush for the cleaning assembly of optical sensors. The replacement frequency depends on the water properties as well as the cleaning intervals and duration.	*99852668*

Photometers

Accessories

Type	Info	Kit No
For DIT-S		
Charger	DIT-S	98664883
Electrode pH	-	96609164
Electrode Redox	-	96623006

Type	Info	Number of analyses	Kit No
pH	pH 6 - 8.5	200	96609168
Buffer	Spare, reagent 1	-	96693021
DPD	Spare, reagent 2	-	96693042
KI	Spare, reagent 3	-	96693043

DIT-S/N/B test reagent

Type	Info	Number of analyses	Kit No
Cl_2 (free or total), O_3, ClO_2	-	350	96609167
ClO_2	Reagent 1	150	96690369
Free chlorine	0.03 - 5.0 mg/l	350	91835797

DIT-L test methods and reagents

Method	Parameter	Differentiation	Measuring range	Analyses per PU [28]	Designation	Product number
CL 6	Chlorine, free	Free	0.01 - 6 mg/l Cl_2	250	DPD No. 1 tablets	95727747
	Chlorine, free (high Ca)	Free (high Ca)			DPD No 1 high Calcium tablets	95727748
	Chlorine, total	Free and combined differentiated			DPD No. 1 tablets or DPD No. 1 high Calcium tablets	95727747 95727748
					DPD No. 3 tablets	95727750
	Chlorine, total	Not differentiated			DPD No. 4 tablets	95727751
CLO_2	Chlorine dioxide	In absence of Cl_2	0.02 - 11 mg/l ClO_2	250	DPD No. 1 tablets	95727747
		In presence of Cl_2			DPD No. 1 tablets	95727747
					Glycine tablets	95727752
CL 6	Chlorine dioxide analysis [29]	Chlorine dioxide, chlorite, free chlorine, combined chlorine	0.01 - 6 mg/l	250	DPD No. 1 tablets	95727747
					DPD No. 3 tablets	95727750
					Glycine tablets	95727752
				100	DPD acidifying tablets	98032751
					DPD neutralising tablets	98032752
O_3	Ozone	In absence of Cl_2	0.02 - 2 mg/l O_3	250	DPD No. 1 tablets	95727747
					DPD No. 3 tablets	95727750
		In presence of Cl_2			DPD No. 1 tablets	95727747
					DPD No. 3 tablets	95727750
					Glycine tablets	95727752
pH	pH value	Phenol red	pH 6.5 - 8.4	250	Phenol red photometer tablets	95727753

[28] PU = packing unit.

[29] The measurements are performed with method "CL6 " as the photometer does not supply a specific method for the determination of these parameters.

DIT-M test methods and reagents

No	Parameter	Differentiation	Measuring range	Analyses per PU	Designation	Product number
40	Aluminium T	-	0.01 - 0.3 mg/l Al	250	Combi pack Aluminium No. 1/No. 2, 250 tablets each	95727755
80	Bromine T	-	0.05 - 13 mg/l Br	100	DPD No. 1 tablets	95727761
100	Chlorine T	Free	0.01 - 6 mg/l Cl_2	250	DPD No. 1 tablets	95727747
		Free (high Ca)			DPD No. 1 high Calcium tablets	95727748
		Total (free and combined differentiated)			DPD No. 1 tablets or DPD No. 1 high Calcium tablets	95727747 95727748
					DPD No. 3 tablets	95727750
		Total (not differentiated)			DPD No. 4 tablets	95727751
120	Chlorine dioxide T	Cl_2 and ClO_2 differentiated	0.02 - 11 mg/l ClO_2	250	DPD No. 1 tablets	95727747
					DPD No. 3 tablets	95727750
					Glycine tablets	95727752
		ClO_2 in absence of Cl_2			DPD No. 1 tablets	95727747
100	Chlorine dioxide analysis T [28)]	Chlorine dioxide, chlorite, free chlorine, combined chlorine	0.01 - 6 mg/l	250	DPD No. 1 tablets	95727747
					DPD No. 3 tablets	95727750
					Glycine tablets	95727752
				100	DPD acidifying tablets	98032751
					DPD neutralising tablets	98032752
90	Chloride T	-	0.5 - 25 mg/l (Cl^-)	250	Combi pack chloride T 1/T 2, 250 tablets each	95727754
160	Cyanuric acid	-	2 - 160 mg/l CyA	100	CyA-TEST tablets	95727760
220	Iron	-	0.02 - 1 mg/l Fe	100	Iron LR tablets	95727756
170	Fluoride L	-	0.05 - 2 mg/l F^-	100	SPADNS reagent	95727757
					Fluoride standard	95727758
240	Manganese T	-	0.2 - 4 mg/l Mn	100	Combi pack, manganese LR 1/LR 2, 100 tablets each	95727759
300	Ozone T	O_3 in the presence of Cl_2	0.02 - 2 mg/l O_3	250	DPD No. 1 tablets	95727747
					DPD No. 3 tablets	95727750
					Glycine tablets	95727752
		O_3 in absence of Cl_2			DPD No. 1 tablets	95727747
					DPD No. 3 tablets	95727750
320	Phosphate LR, ortho T	-	0.05 - 4 mg/l PO_4	100	Combi pack, phosphate No. 1 LR/No. 2 LR, 100 tablets each	95727764
210	Hydrogen peroxide T	-	0.03 - 3 mg/l H_2O_2	100	Hydrogen peroxide LR tablets	95727762
330	pH value T	-	pH 6.5 - 8.4 (phenol red)	250	Phenol red photometer tablets	95727753
20	Acid demand to pH 4.3 T	-	0.1 - 4 mmol/l	100	Alka-M-photometer tablets	95727763

30) The measurements are performed with method "100 Chlorine" and differentiation "free" as the photometer does not supply a specific method for the determination of these parameters.

T = tablet, L = liquide reagent, LR = low range, PU = packing unit.

DIT-L/M liquid reagents

Description	Measuring range	Product number
Kit, liquid reagent chlorine	0.02 – 4 mg/l Cl_2	99837978
Spare, DPD No. 1 reagent solution	-	99837875
Spare, DPD No. 1 buffer solution	-	99837876
Spare, DPD No. 3 solution	-	99837877
Spare, phenol red solution	pH 6.5 - 8.4	99837878

Argentina
Bombas GRUNDFOS de Argentina S.A.
Ruta Panamericana km. 37.500industin
1619 - Garín Pcia. de B.A.
Tel.: +54-3327 414 444
Fax: +54-3327 45 3190

Australia
GRUNDFOS Pumps Pty. Ltd.
P.O. Box 2040
Regency Park
South Australia 5942
Tel.: +61-8-8461-4611
Fax: +61-8-8340-0155

Austria
GRUNDFOS Pumpen Vertrieb Ges.m.b.H.
Grundfosstraße 2
A-5082 Grödig/Salzburg
Tel.: +43-6246-883-0
Fax: +43-6246-883-30

Belgium
N.V. GRUNDFOS Bellux S.A.
Boomsesteenweg 81-83
B-2630 Aartselaar
Tel.: +32-3-870 7300
Fax: +32-3-870 7301

Bosnia and Herzegovina
GRUNDFOS Sarajevo
Zmaja od Bosne 7-7A
BiH-71000 Sarajevo
Tel.: +387 33 592 480
Fax: +387 33 590 465
www.ba.grundfos.com
E-mail: grundfos@bih.net.ba

Brazil
BOMBAS GRUNDFOS DO BRASIL
Av. Humberto de Alencar Castelo Branco, 630
CEP 09850 - 300
São Bernardo do Campo - SP
Tel.: +55-11 4393 5533
Fax: +55-11 4343 5015

Bulgaria
Grundfos Bulgaria EOOD
Slatina District
Iztochna Tangenta street no. 100
BG - 1592 Sofia
Tel.: +359 2 49 22 200
Fax: +359 2 49 22 201
E-mail: bulgaria@grundfos.bg

Canada
GRUNDFOS Canada inc.
2941 Brighton Road
Oakville, Ontario
L6H 6C9
Tel.: +1-905 829 9533
Fax: +1-905 829 9512

China
GRUNDFOS Pumps (Shanghai) Co. Ltd.
10F The Hub, No. 33 Suhong Road
Minhang District
Shanghai 201106 PRC
Tel.: +86 21 612 252 22
Fax: +86 21 612 253 33

Colombia
GRUNDFOS Colombia S.A.S.
Km 1.5 vía Siberia-Cota Conj. Potrero Chico,
Parque Empresarial Arcos de Cota Bod. 1A.
Cota, Cundinamarca
Tel.: +57(1)-2913444
Fax: +57(1)-8764586

Croatia
GRUNDFOS CROATIA d.o.o.
Buzinski prilaz 38, Buzin
HR-10010 Zagreb
Tel.: +385 1 6595 400
Fax: +385 1 6595 499
www.hr.grundfos.com

Czech Republic
GRUNDFOS Sales Czechia and Slovakia s.r.o.
Čajkovského 21
779 00 Olomouc
Tel.: +420-585-716 111

Denmark
GRUNDFOS DK A/S
Martin Bachs Vej 3
DK-8850 Bjerringbro
Tel.: +45-87 50 50 50
Fax: +45-87 50 51 51
E-mail: info_GDK@grundfos.com
www.grundfos.com/DK

Estonia
GRUNDFOS Pumps Eesti OÜ
Peterburi tee 92G
11415 Tallinn
Tel.: + 372 606 1690
Fax: + 372 606 1691

Finland
OY GRUNDFOS Pumput AB
Trukkikuja 1
FI-01360 Vantaa
Tel.: +358-(0) 207 889 500

France
Pompes GRUNDFOS Distribution S.A.
Parc d'Activités de Chesnes
57, rue de Malacombe
F-38290 St. Quentin Fallavier (Lyon)
Tel.: +33-4 74 82 15 15
Fax: +33-4 74 94 10 51

Germany
GRUNDFOS GMBH
Schlüterstr. 33
40699 Erkrath
Tel.: +49-(0) 211 929 69-0
Fax: +49-(0) 211 929 69-3799
E-mail: infoservice@grundfos.de
Service in Deutschland:
kundendienst@grundfos.de

Greece
GRUNDFOS Hellas A.E.B.E.
20th km. Athinon-Markopoulou Av.
P.O. Box 71
GR-19002 Peania
Tel.: +0030-210-66 83 400
Fax: +0030-210-66 46 273

Hong Kong
GRUNDFOS Pumps (Hong Kong) Ltd.
Unit 1, Ground floor, Siu Wai industrial Centre
29-33 Wing Hong Street & 68 King Lam Street, Cheung Sha Wan
Kowloon
Tel.: +852-27861706 / 27861741
Fax: +852-27858664

Hungary
GRUNDFOS South East Europe Kft.
Tópark u. 8
H-2045 Törökbálint
Tel.: +36-23 511 110
Fax: +36-23 511 111

India
GRUNDFOS Pumps India Private Limited
118 Old Mahabalipuram Road
Thoraipakkam
Chennai 600 097
Tel.: +91-44 2496 6800

Indonesia
PT GRUNDFOS Pompa
Graha intirub Lt. 2 & 3
Jln. Cililitan Besar No.454. Makasar, Jakarta Timur
ID-Jakarta 13650
Tel.: +62 21-469-51900
Fax: +62 21-460 6910 / 460 6901

Ireland
GRUNDFOS (Ireland) Ltd.
Unit A, Merrywell Business Park
Ballymount Road Lower
Dublin 12
Tel.: +353-1-4089 800
Fax: +353-1-4089 830

Italy
GRUNDFOS Pompe Italia S.r.l.
Via Gran Sasso 4
I-20060 Truccazzano (Milano)
Tel.: +39-02-95838112
Fax: +39-02-95309290 / 95838461

Japan
GRUNDFOS Pumps K.K.
1-2-3, Shin-Miyakoda, Kita-ku
Hamamatsu
431-2103 Japan
Tel.: +81 53 428 4760
Fax: +81 53 428 5005

Kazakhstan
Grundfos Kazakhstan LLP
7' Kyz-Zhibek Str., Kok-Tobe micr.
KZ-050020 Almaty Kazakhstan
Tel.: +7 (727) 227-98-55/56

Korea
GRUNDFOS Pumps Korea Ltd.
6th Floor, Aju Building 679-5
Yeoksam-dong, Kangnam-ku, 135-916
Seoul, Korea
Tel.: +82-2-5317 600
Fax: +82-2-5633 725

Latvia
SIA GRUNDFOS Pumps Latvia
Deglava biznesa centrs
Augusta Deglava ielā 60
LV-1035, Rīga,
Tel.: + 371 714 9640, 7 149 641
Fax: + 371 914 9646

Lithuania
GRUNDFOS Pumps UAB
Smolensko g. 6
LT-03201 Vilnius
Tel.: + 370 52 395 430
Fax: + 370 52 395 431

Malaysia
GRUNDFOS Pumps Sdn. Bhd.
7 Jalan Peguam U1/25
Glenmarie industrial Park
40150 Shah Alam, Selangor
Tel.: +60-3-5569 2922
Fax: +60-3-5569 2866

Mexico
Bombas GRUNDFOS de México S.A. de C.V.
Boulevard TLC No. 15
Parque industrial Stiva Aeropuerto
Apodaca, N.L. 66600
Tel.: +52-81-8144 4000
Fax: +52-81-8144 4010

Netherlands
GRUNDFOS Netherlands
Veluwezoom 35
1326 AE Almere
Postbus 22015
1302 CA ALMERE
Tel.: +31-88-478 6336
Fax: +31-88-478 6332
E-mail: info_gnl@grundfos.com

New Zealand
GRUNDFOS Pumps NZ Ltd.
17 Beatrice Tinsley Crescent
North Harbour Industrial Estate
Albany, Auckland
Tel.: +64-9-415 3240
Fax: +64-9-415 3250

Norway
GRUNDFOS Pumper A/S
Strømsveien 344
Postboks 235, Leirdal
N-1011 Oslo
Tel.: +47-22 90 47 00
Fax: +47-22 32 21 50

Poland
GRUNDFOS Pompy Sp. z o.o.
ul. Klonowa 23
Baranowo k. Poznania
PL-62-081 Przeźmierowo
Tel.: (+48-61) 650 13 00
Fax: (+48-61) 650 13 50

Portugal
Bombas GRUNDFOS Portugal, S.A.
Rua Calvet de Magalhães, 241
Apartado 1079
P-2770-153 Paço de Arcos
Tel.: +351-21-440 76 00
Fax: +351-21-440 76 90

Romania
GRUNDFOS Pompe România SRL
S-PARK BUSINESS CENTER, Clădirea A2, etaj 2
Str. Tipografilor, Nr. 11-15, Sector 1, Cod 013714
Bucuresti, Romania
Tel.: 004 021 2004 100
E-mail: romania@grundfos.ro

Serbia
Grundfos Srbija d.o.o.
Omladinskih brigada 90b
11070 Novi Beograd
Tel.: +381 11 2258 740
Fax: +381 11 2281 769
www.rs.grundfos.com

Singapore
GRUNDFOS (Singapore) Pte. Ltd.
25 Jalan Tukang
Singapore 619264
Tel.: +65-6681 9688
Faxax: +65-6681 9689

Slovakia
GRUNDFOS s.r.o.
Prievozská 4D 821 09 BRATISLAVA
Tel.: +421 2 5020 1426
sk.grundfos.com

Slovenia
GRUNDFOS LJUBLJANA, d.o.o.
Leskoškova 9e, 1122 Ljubljana
Tel.: +386 (0) 1 568 06 10
Fax: +386 (0)1 568 06 19
E-mail: tehnika-si@grundfos.com

South Africa
GRUNDFOS (PTY) LTD
16 Lascelles Drive, Meadowbrook Estate
1609 Germiston, Johannesburg
Tel.: (+27) 10 248 6000
Fax: (+27) 10 248 6002
E-mail: lgradidge@grundfos.com

Spain
Bombas GRUNDFOS España S.A.
Camino de la Fuentecilla, s/n
E-28110 Algete (Madrid)
Tel.: +34-91-848 8800
Fax: +34-91-628 0465

Sweden
GRUNDFOS AB
Box 333 (Lunnagårdsgatan 6)
431 24 Mölndal
Tel.: +46 31 332 23 000
Fax: +46 31 331 94 60

Switzerland
GRUNDFOS Pumpen AG
Bruggacherstrasse 10
CH-8117 Fällanden/ZH
Tel.: +41-44-806 8111
Fax: +41-44-806 8115

Taiwan
GRUNDFOS Pumps (Taiwan) Ltd.
7 Floor, 219 Min-Chuan Road
Taichung, Taiwan, R.O.C.
Tel.: +886-4-2305 0868
Fax: +886-4-2305 0878

Thailand
GRUNDFOS (Thailand) Ltd.
92 Chaloem Phrakiat Rama 9 Road
Dokmai, Pravej, Bangkok 10250
Tel.: +66-2-725 8999
Fax: +66-2-725 8998

Turkey
GRUNDFOS POMPA San. ve Tic. Ltd. Sti.
Gebze Organize Sanayi Bölgesi
Ihsan dede Caddesi
2. yol 200. Sokak No. 204
41490 Gebze/ Kocaeli
Tel.: +90 - 262-679 7979
Fax: +90 - 262-679 7905
E-mail: satis@grundfos.com

Ukraine
ТОВ "ГРУНДФОС УКРАЇНА"
Бізнес Центр Європа
Столичне шосе, 103
м. Київ, 03131, Україна
Tel.: (+38 044) 237 04 00
Fax: (+38 044) 237 04 01
E-mail: ukraine@grundfos.com

United Arab Emirates
GRUNDFOS Gulf Distribution
P.O. Box 16768
Jebel Ali Free Zone, Dubai
Tel.: +971 4 8815 166
Fax: +971 4 8815 136

United Kingdom
GRUNDFOS Pumps Ltd.
Grovebury Road
Leighton Buzzard/Beds. LU7 4TL
Tel.: +44-1525-850000
Fax: +44-1525-850011

U.S.A.
Global Headquarters for WU
856 Koomey Road
Brookshire, Texas 77423 USA
Phone: +1-630-236-5500

Uzbekistan
Grundfos Tashkent, Uzbekistan
The Representative Office of Grundfos Kazakhstan in Uzbekistan
38a, Oybek street, Tashkent
Tel.: (+998) 71 150 3290 / 71 150 3291
Fax: (+998) 71 150 3292

Trademarks displayed in this material, including but not limited to Grundfos and the Grundfos logo, are registered trademarks owned by The Grundfos Group. © 2025 Grundfos Holding A/S, all rights reserved.

93332819 **12. 2024**
ECM: 1413522

GRUNDFOS Holding A/S
Poul Due Jensens Vej 7
DK-8850 Bjerringbro
Tel: +45 87 50 14 00
www.grundfos.com

GRUNDFOS