CUE

Installation and operating instructions

CUE
Data booklet
English
http://net.grundfos.com/qr/i/96706948

CUE
Safety instructions
(all available languages)
http://net.grundfos.com/qr/i/99674140

be
think
innovate

GRUNDFOS

CUE

English (GB)
Installation and operating instructions 5

Български (BG)
Упътване за монтаж и експлоатация. 49

Čeština (CZ)
Montážní a provozní návod 94

Deutsch (DE)
Montage- und Betriebsanleitung 138

Dansk (DK)
Monterings- og driftsinstruktion 183

Eesti (EE)
Paigaldus- ja kasutusjuhend 227

Español (ES)
Instrucciones de instalación y funcionamiento 271

Suomi (FI)
Asennus- ja käyttöohjeet 316

Français (FR)
Notice d'installation et de fonctionnement 360

Ελληνικά (GR)
Οδηγίες εγκατάστασης και λειτουργίας. 404

Magyar (HU)
Telepítési és üzemeltetési utasítás. 449

Italiano (IT)
Istruzioni di installazione e funzionamento 494

Lietuviškai (LT)
Įrengimo ir naudojimo instrukcija 539

Latviešu (LV)
Uzstādīšanas un ekspluatācijas instrukcija 583

Nederlands (NL)
Installatie- en bedieningsinstructies 627

Polski (PL)
Instrukcja montażu i eksploatacji 672

Português (PT)
Instruções de instalação e funcionamento 717

Română (RO)
Instrucţiuni de instalare şi utilizare 761

Srpski (RS)
Uputstvo za instalaciju i rad 805

Svenska (SE)
Monterings- och driftsinstruktion. 849

Türkçe (TR)
Montaj ve kullanım kılavuzu 893

Українська (UA)
Інструкції з монтажу та експлуатації 937

中文 (CN)
安装和使用说明书 983

한국어 (KO)

설치 및 작동 지침 1024

العربية (AR)

تعليمات التركيب و التشغيل 1066

Original installation and operating instructions

Table of contents

1. General information . . . 5
1.1 Hazard statements . . . 5
1.2 Notes . . . 5
1.3 References . . . 5

2. Product introduction . . . 6
2.1 Product description . . . 6
2.2 Intended use . . . 6
2.3 Applications . . . 6
2.4 Identification . . . 6

3. Receiving the product . . . 6
3.1 Transporting the product . . . 6
3.2 Inspecting the product . . . 6
3.3 Scope of delivery . . . 6

4. Installation requirements . . . 7
4.1 Safety regulations . . . 7
4.2 IT mains . . . 7
4.3 Aggressive environment . . . 7
4.4 Reduced performance under certain conditions . . . 7

5. Mechanical installation . . . 8
5.1 Enclosure types . . . 8
5.2 Space requirements and air circulation . . . 8
5.3 Mounting . . . 8
5.4 Mounting on the floor . . . 8

6. Electrical connection . . . 9
6.1 Electrical protection . . . 9
6.2 EMC-correct installation . . . 10
6.3 RFI filters . . . 10
6.4 Motor cable . . . 11
6.5 Mains and motor connection . . . 11
6.6 STO installation, optional . . . 17
6.7 Connecting the signal terminals . . . 18
6.8 Connecting the signal relays . . . 21

7. Starting up the product . . . 23
7.1 Switching on the product . . . 23
7.2 Activating the optional STO function . . . 23

8. Control functions . . . 24
8.1 Operating panel . . . 24
8.2 Menu overview . . . 24
8.3 Menu structure . . . 25
8.4 Operating modes . . . 26
8.5 Control modes . . . 26

9. Setting the product . . . 27
9.1 First-time setup via the startup guide . . . 27
9.2 Uploading or downloading data . . . 29
9.3 Setting an asynchronous motor . . . 29
9.4 Checking the motor rotation direction . . . 29
9.5 Setting a permanent-magnet motor . . . 29
9.6 Setting a synchronous reluctance motor . . . 30
9.7 Setting a permanent-magnet assisted synchronous reluctance motor . . . 30
9.8 Automatic Energy Optimisation (AEO) . . . 30
9.9 Testing the local control . . . 30
9.10 Starting the system . . . 30
9.11 Resetting to default settings . . . 30

10. Servicing the product . . . 31

11. Fault finding the product . . . 32
11.1 Overview of warnings and alarms . . . 32

12. Technical data . . . 35
12.1 Enclosure . . . 35
12.2 Operating conditions . . . 35
12.3 Mechanical data . . . 35
12.4 Electrical data . . . 40
12.5 Drive efficiency (CDM) . . . 41
12.6 Dimensions and weights . . . 44
12.7 Miscellaneous data . . . 47

13. Disposing of the product . . . 48

1. General information

Read this document before you install the product. Installation and operation must comply with local regulations and accepted codes of good practice.

1.1 Hazard statements

The symbols and hazard statements below may appear in Grundfos installation and operating instructions, safety instructions and service instructions.

DANGER
Indicates a hazardous situation which, if not avoided, will result in death or serious personal injury.

WARNING
Indicates a hazardous situation which, if not avoided, could result in death or serious personal injury.

CAUTION
Indicates a hazardous situation which, if not avoided, could result in minor or moderate personal injury.

The hazard statements are structured in the following way:

SIGNAL WORD
Description of the hazard
Consequence of ignoring the warning
- Action to avoid the hazard.

1.2 Notes

The symbols and notes below may appear in Grundfos installation and operating instructions, safety instructions and service instructions.

Observe these instructions for explosion-proof products.

A blue or grey circle with a white graphical symbol indicates that an action must be taken.

A red or grey circle with a diagonal bar, possibly with a black graphical symbol, indicates that an action must not be taken or must be stopped.

If these instructions are not observed, it may result in malfunction or damage to the equipment.

Tips and advice that make the work easier.

1.3 References

Technical documentation for Grundfos CUE:

- The manual contains all information required for putting CUE into operation.
- The data booklet contains all technical information about the construction and applications of CUE.
- The service instructions contain all required information for dismantling and repairing the frequency converter.

Technical documentation is available in Grundfos Product Center at www.grundfos.com.

If you have any questions, contact the nearest Grundfos company or service workshop.

2. Product introduction

2.1 Product description

CUE is a series of external frequency converters especially designed for pumps.

With the startup guide in CUE, the installer can quickly set central parameters and put CUE into operation.

Connected to a sensor or an external control signal, CUE quickly adapts the pump speed to the actual demand.

The operating panel displays any alarms or warnings.

! If the pump speed exceeds the rated speed, the pump will be overloaded.

2.2 Intended use

CUE frequency converters can be used in both new and existing installations. Local operation is performed via the operating panel which has a graphic display showing the menu structure. The menu structure uses the same system as Grundfos E-pumps.

Remote operation is performed via external signals, for instance via digital inputs or GENIbus.

2.3 Applications

The CUE series and Grundfos standard pumps are a supplement to the Grundfos E-pumps range with an integrated frequency converter.

A CUE solution offers the same E-pump functionality in these cases:

- in mains voltage or power ranges not covered by the E-pump range
- in applications where an integrated frequency converter is not desirable or permissible.

2.4 Identification

2.4.1 Nameplate

CUE can be identified by means of the nameplate. An example is shown below.

TM043272

Example of nameplate

Text	Description
T/C:	CUE (product name) 202P1M2... (internal code)
Prod. no:	Product number: 12345678
S/N:	Serial number: 123456G234
	The last three digits indicate the production date: 23 is the week, and 4 is the year 2004.
1.5 kW (2 hp)	Typical shaft power of the motor
IN:	Supply voltage, frequency and maximum input current
OUT:	Motor voltage, frequency and maximum output current. The maximum output frequency usually depends on the pump type.
CHASSIS/IP20	Enclosure class
Tamb.	Maximum ambient temperature

2.4.2 Packaging label

CUE can also be identified by means of the label on the packaging.

3. Receiving the product

WARNING
Crushing of feet
Death or serious personal injury
- Use safety shoes during transport and avoid stacking boxes.

CAUTION
Lifting hazard
Minor or moderate personal injury
- Use proper lifting equipment when handling the product.
- Follow local regulations.

3.1 Transporting the product

To prevent damage during transport, CUE must only be unpacked at the installation site.

3.2 Inspecting the product

Check on receipt that the packaging is intact and the unit is complete. In case of damage, contact the carrier immediately.

Note that CUE is delivered in packaging which is not suitable for outdoor storage.

3.3 Scope of delivery

The packaging contains one or more accessory bags, the documentation and the unit itself.

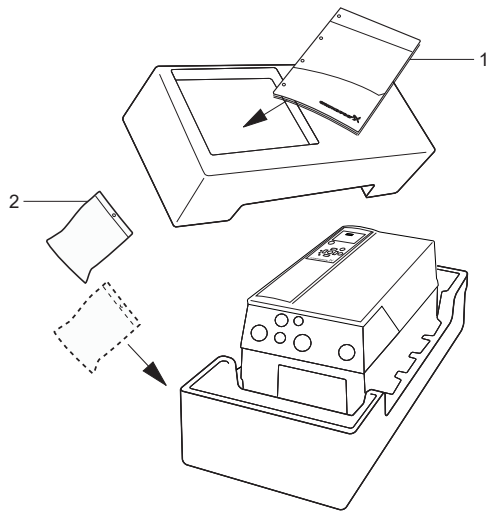

TM038857

CUE packaging

Pos.	Description
1	Documentation
2	Accessory bags

3.3.1 Lifting CUE

Always lift the product using the lifting holes. Use a bar to avoid bending the lifting holes.

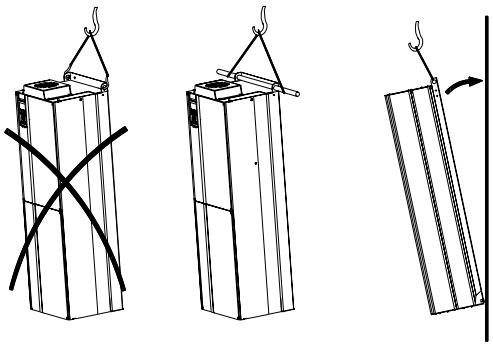

Recommended lifting method

4. Installation requirements

Any installation, maintenance and inspection must be carried out by trained persons.

WARNING
Sharp element
Death or serious personal injury
- Use safety knives and protective gloves when unpacking the product.

WARNING
Lifting hazard
Death or serious personal injury
- Use proper lifting equipment when handling the product.
- Follow local regulations.

WARNING
Electric shock
Death or serious personal injury
- Before starting any work on the product, make sure that the power supply has been switched off at least for as long as stated below and that it cannot be accidentally switched on.
- Touching the electrical parts may be fatal, even after CUE has been switched off.

Voltage	Min. waiting time		
	4 minutes	15 minutes	20 minutes
200-240 V	0.75 - 3.7 kW (1 - 5 hp)	5.5 - 45 kW (7.5 - 60 hp)	
380-500 V	0.55 - 7.5 kW (0.75 - 10 hp)	11 - 90 kW (15 - 125 hp)	110 - 250 kW (150 - 350 hp)
525-600 V	0.75 - 7.5 kW (1 - 10 hp)	11 - 90 kW (15 - 125 hp)	
525-690 V			11 - 250 kW (15 - 350 hp)

You can only wait for a shorter period of time if stated on the nameplate of the product in question.

Related information

6. Electrical connection

10. Servicing the product

4.1 Safety regulations

- The **OFF** button of the operating panel does not disconnect CUE from the power supply and must therefore not be used as a safety switch.
- CUE must be earthed correctly and protected against indirect contact according to local regulations.
- The leakage current to protective earth exceeds 3.5 mA.
- Enclosure class IP20/21 must not be installed freely accessible, but only in a panel.
- Enclosure class IP54/55 must not be installed outdoors without additional protection against weather conditions and the sun.
- The STO function does not disconnect CUE from the power supply and must therefore not be used as a safety switch.
- The STO function does not prevent unwanted movement from external forces on the motor, for example, back pressure, and the motor shaft must be covered.

Always observe local regulations concerning cable cross-section, short-circuit protection and overcurrent protection.

The general safety necessitates special considerations as to these aspects:

- fuses and switches for overcurrent and short-circuit protection
- selection of cables (mains current, motor, load distribution and relay)
- net configuration (IT, TN, earthing)
- safety on connecting inputs and outputs (PELV).

4.2 IT mains

Do not connect 380-500 V CUE frequency converters to mains supplies with a voltage between phase and protective earth of more than 440 V.

In connection with IT mains and earthed delta mains, the mains voltage may exceed 440 V between phase and protective earth.

4.3 Aggressive environment

CUE must not be installed in an environment where the air contains liquids, particles or gases which may affect and damage the electronic components.

CUE contains a large number of mechanical and electronic components. They are all vulnerable to environmental impact.

4.4 Reduced performance under certain conditions

CUE reduces its performance under these conditions:

- low air pressure (at high altitude)
- long motor cables.

Related information

4.4.1 Reduction at low air pressure

4.4.2 Reduction in connection with long motor cables

4.4.1 Reduction at low air pressure

At altitudes above 2000 m (6600 ft), the PELV requirements cannot be met.

PELV = Protective Extra Low Voltage.

At low air pressure, the cooling capacity of air is reduced, and CUE automatically reduces the performance to prevent overload.

It may be necessary to select a CUE unit with a higher performance.

Related information

4.4 Reduced performance under certain conditions

4.4.2 Reduction in connection with long motor cables

The maximum cable length is 300 m (1000 ft) for unscreened and 150 m (500 ft) for screened cables. In case of longer cables, contact Grundfos.

CUE is designed for a motor cable with a maximum cross-section as stated in sections concerning non-UL fuses and UL fuses.

Related information

4.4 Reduced performance under certain conditions

12.3.4 Non-UL fuses and conductor cross-sections to mains and motor, for installations outside North America

12.3.5 UL fuses and conductor cross-sections to mains and motor, for installations in North America

5. Mechanical installation

The individual CUE cabinet sizes are characterised by their enclosures. The table in the technical data section shows the relationship between the enclosure class and enclosure type.

Related information

12.1 Enclosure

5.1 Enclosure types

Products with integrated STO function must be installed in an IP54 cabinet according to IEC 60529 or in an equivalent environment. In special applications, a higher IP degree may be necessary.

5.2 Space requirements and air circulation

The CUE units can be mounted side by side, but as sufficient air circulation is required for cooling, these requirements must be met:

- Sufficient free space above and below the CUE cabinet. See the table below.
- Ambient temperature up to 50 °C (122 °F).
- The CUE cabinet must be hung directly on the wall or fitted with a back plate.

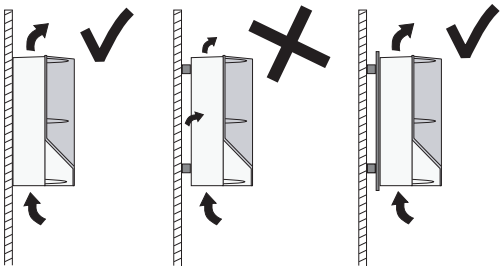

CUE hung directly on the wall or fitted with a back plate

Required free space above and below the CUE cabinet:

Enclosure	Space [mm (in)]
A2, A3, A4, A5	100 (3.9)
B1, B2, B3, B4, C1, C3	200 (7.9)
C2, C4, D1h, D2h, D5h, D7h	225 (8.9)

5.3 Mounting

The user is responsible for mounting CUE securely on a firm surface.

1. Mark and drill holes.
2. Fit the screws at the bottom, but leave loose. Mount CUE, and tighten the four screws.

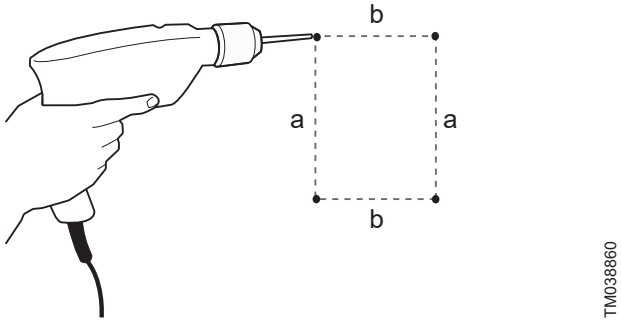

Drilling holes in the wall

Related information

12.6.1 Enclosures A2-A5, B1-B4 and C1-C4

5.4 Mounting on the floor

WARNING
Crushing of feet
Death or serious personal injury
- CUE is very heavy and may fall over if the pedestal is not anchored to the floor.

The user is responsible for mounting CUE securely on a firm surface.

See the pedestal-kit instructions for further information.

By means of a pedestal (optional), CUE can also be mounted on the floor.

1. Mark the mounting holes on the floor. See the figure below.
2. Drill the holes.
3. Mount the pedestal on the floor.
4. Mount CUE on the pedestal using the enclosed screws.

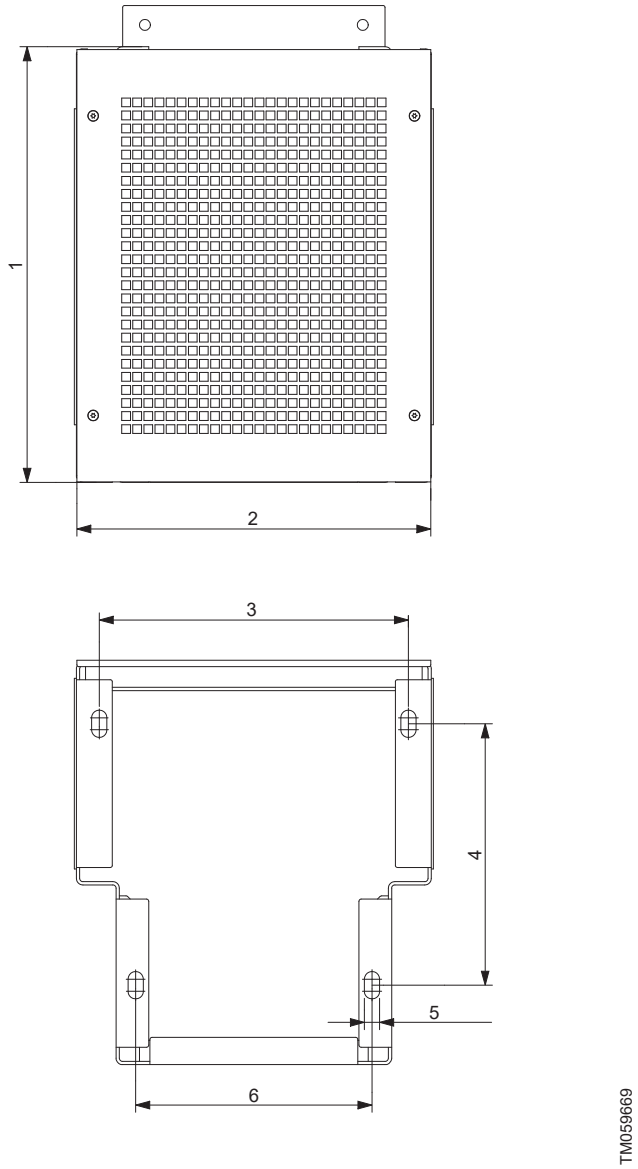

Drilling template for pedestal

Pos.	D1h [mm]	D2h [mm]	D5h/D7h [mm]
1	400	400	200
2	325	420	326
3	284	379	290
4	240	240	235
5	4 x 14	4 x 14	4 x 14
6	217	317	290

6. Electrical connection

WARNING
Electric shock
Death or serious personal injury

- Before starting any work on the product, make sure that the power supply has been switched off and that it cannot be accidentally switched on. See the section regarding installation requirements.
- Touching the electrical parts may be fatal, even after CUE has been switched off.

The owner or installer is responsible for ensuring correct earthing and protection according to local regulations.

For products with STO, ensure short-circuit protection of the cable between terminal 37 and the external safety device.

Security measures are the responsibility of the user.
The frequency converter parameters can be password protected.

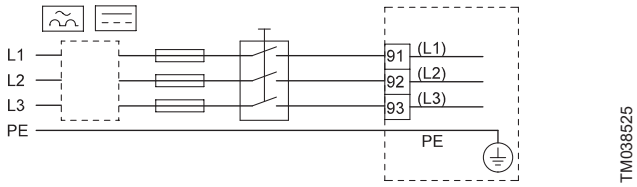

ELCB
Example of three-phase mains connection of CUE with main switch, backup fuses and additional protection

Related information

4. Installation requirements
6.2 EMC-correct installation
6.5.1 Main switch
9.4 Checking the motor rotation direction

6.1 Electrical protection

6.1.1 Protection against electric shock, indirect contact

CAUTION
Electric shock
Minor or moderate personal injury

- CUE must be earthed correctly and protected against indirect contact according to local regulations.

The leakage current to protective earth exceeds 3.5 mA, and a reinforced earth connection is required.

Protective conductors must always have a yellow and green (PE) or yellow, green and blue (PEN) colour marking.
Instructions according to EN IEC 61800-5-1:

- CUE must be stationary, installed permanently and connected permanently to the mains supply.
- The protective earth connection must be carried out with duplicate protective conductors or with a single reinforced protective conductor with a cross-section of minimum 10 mm^2.

6.1.2 Protection against short circuit, fuses

CUE and the supply system must be protected against short circuit.
Grundfos requires that the backup fuses mentioned in section "Cable cross-section to signal terminals" are used for protection against short circuit.
CUE offers complete short-circuit protection in case of a short circuit on the motor output.

Related information

12.3.3 Cable cross-sections to signal terminals

6.1.3 Additional protection

WARNING
Electric shock
Death or serious personal injury

- The leakage current to protective earth must exceed 3.5 mA.

If CUE is connected to an electrical installation where an earth leakage circuit breaker (ELCB/RCD) is used as additional protection, the circuit breaker must be of a type marked with the following symbols:

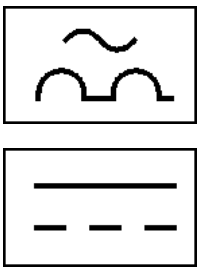

TMA06789

TM006789

ELCB/RCD

The circuit breaker is type B.

The total leakage current of all the electrical equipment in the installation must be taken into account.

The leakage current of CUE in normal operation can be seen in the electrical data section.

During startup and in asymmetrical supply systems, the leakage current can be higher than normal and may cause the ELCB/RCD to trip.

Related information

12.4 Electrical data

6.1.4 Motor protection

The motor requires no external motor protection. CUE protects the motor against thermal overloading and blocking.

6.1.5 Protection against overcurrent

CUE has an internal overcurrent protection for overload protection on the motor output.

6.1.6 Protection against mains voltage transients

CUE is protected against mains voltage transients according to EN 61800-3, second environment.

6.2 EMC-correct installation

The motor cable must be screened for CUE to meet EMC requirements.

This section provides guidelines for good practice when installing CUE. Follow these guidelines to comply with EN 61800-3, first environment.

- Use only motor and signal cables with a braided metal screen in applications without output filter.
- There are no special requirements to supply cables, apart from local requirements.
- Leave the screen as close to the connecting terminals as possible.
- Avoid terminating the screen by twisting the ends. See the figure below about not twisting the screen ends. Use cable clamps or EMC screwed cable entries instead.
- Connect the screen to frame at both ends for both motor and signal cables. See the figure below with an example of connection of a 3-conductor bus cable with screen connected at both ends. If the controller has no cable clamps, connect only the screen to the CUE cabinet. See the figure below with an example of connection of a 3-conductor bus cable with screen connected to CUE (controller with no cable clamps).
- Avoid unscreened motor and signal cables in electrical cabinets with frequency converters.
- Make the motor cable as short as possible in applications without output filter to limit the noise level and minimise leakage currents.
- Screws for frame connections must always be tightened whether a cable is connected or not.
- Keep mains cables, motor cables and signal cables separated in the installation if possible.

Other installation methods may give similar EMC results if the above guidelines for good practice are followed.

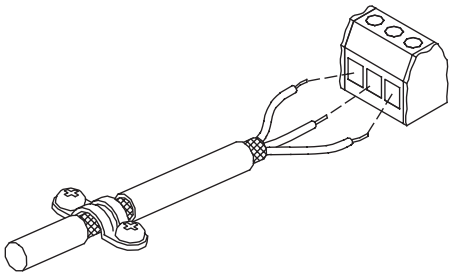

TM021325

Example of stripped cable with screen

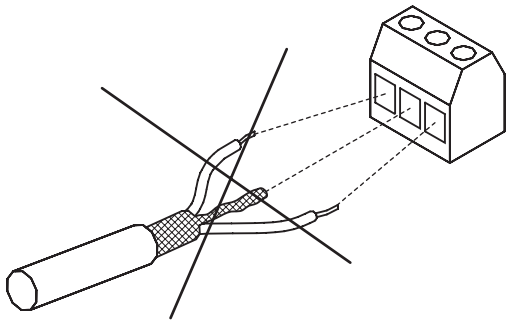

TM038812

Do not twist the screen ends

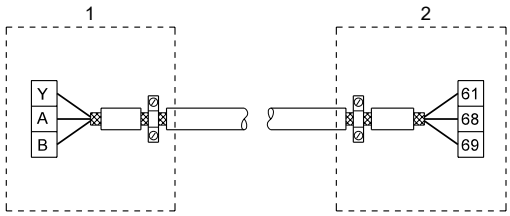

TM038732

Example of connection of a 3-conductor bus cable with screen connected at both ends

Pos.	Description
1	Controller
2	CUE

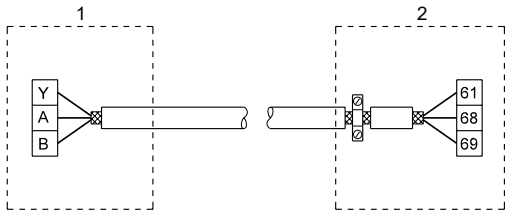

TM038731

Example of connection of a 3-conductor bus cable with screen connected to CUE (controller with no cable clamps)

Pos.	Description
1	Controller
2	CUE

Related information

6. Electrical connection

6.3 RFI filters

To meet the EMC requirements, CUE comes with the following types of built-in radio-frequency interference filters (RFI).

Voltage [V]	Typical shaft power P2 [kW (hp)]	RFI filter type
1 x 200-240*	1.1 - 7.5 (1.5 - 10)	C1
3 x 200-240	0.75 - 45 (1 - 60)	C1
3 x 380-500	0.55 - 90 (0.75 - 125)	C1
3 x 380-500	110 - 250 (150 - 350)	C3
3 x 525-600	0.75 - 90 (1 - 125)	C3
3 x 525-690	11 - 250 (15 - 350)	C3

* Single-phase input - three-phase output.

Description of RFI filter types

C1:	For use in domestic areas.
C3:	For use in industrial areas with own low-voltage transformer.

RFI filter types are according to EN 61800-3.

Equipment of category C3

- This type of power drive system (PDS) is not intended to be used on a low-voltage public network which supplies domestic premises.

Radio frequency interference is expected if used on such a network.

Related information

12.7.1 Sound pressure level

6.3.1 Output filters

Output filters are used for reducing the voltage stress on the motor windings and the stress on the motor insulation system as well as for decreasing acoustic noise from the frequency-converter-driven motor.

Two types of output filters are available as accessories for CUE:

- dU/dt filters
- sine-wave filters.

Use of output filters

The table below shows when we recommend an output filter and the type to use. The selection depends on the following:

- pump type
- motor cable length
- the required reduction of the acoustic noise from the motor.

Pump type	dU/dt filter	Sine-wave filter
SP, BM, BMB with motor voltage from 380 V and up	-	0-300 m*
Pumps with Grundfos motor MG71 and MG80 up to and including 1.5 kW (2 hp)	-	0-300 m*
Applications with desired reduction of dU/dt and noise emission, low reduction	0-150 m*	-
Applications with desired reduction of dU/dt, voltage peaks and noise emission, high reduction	-	0-300 m*
Applications with motors of 500 V and up	-	0-300 m*

* The lengths stated apply to the motor cable.

6.4 Motor cable

To meet the requirements of EN 61800-3, the motor cable must always be a screened cable whether an output filter is installed or not.

The mains cable does not need to be a screened cable. See the figures below.

TM044289

Example of installation without filter

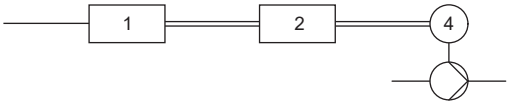

TM044290

Example of installation with filter. The cable between CUE and filter must be short.

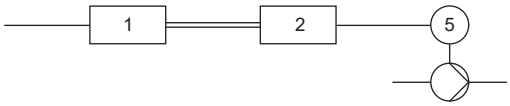

TM044291

Submersible pump without connection box. Frequency converter and filter installed close to the well.

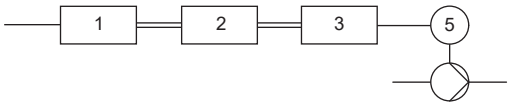

TM044292

Submersible pump with connection box and screened cable. Frequency converter and filter installed far away from the well, and connection box installed close to the well.

Symbol	Designation
1	CUE
2	Filter
3	Connection box
4	Standard motor
5	Submersible motor
One line	Unscreened cable
Double line	Screened cable

6.5 Mains and motor connection

Check that the mains voltage and frequency correspond to the values on the nameplate of CUE and the motor.

The motor cable must be screened for CUE to meet EMC requirements.

The supply voltage and frequency are marked on the CUE nameplate. Make sure that CUE is suitable for the power supply of the installation site.

Related information

6.8.3.1 Enclosures A2, A3 and B3

6.8.3.2 Enclosures A5, B1, B2, B4, C1, C2, C3, C4, D1 and D2

6.5.1 Main switch

A main switch can be installed before the CUE cabinet according to local regulations. See the figure in the EMC-correct installation section.

Related information

6. Electrical connection

6.5.2 Wiring diagram

The wires in the terminal box must be as short as possible. Excepted from this is the protective conductor which must be so long that it is the last one to be disconnected in case the wire is inadvertently pulled out of the cable entry.

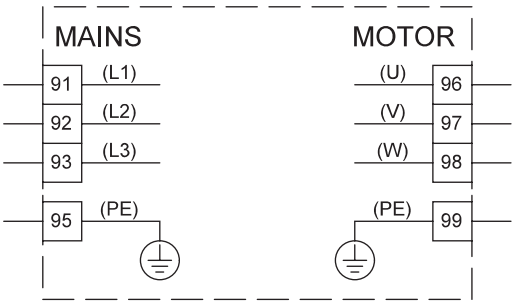

Wiring diagram, three-phase mains connection

Terminal		Function
91	(L1)	Three-phase mains supply
92	(L2)	
93	(L3)	
95/99	(PE)	Protective earth connection
96	(U)	Three-phase motor connection, 0-100 % of mains voltage
97	(V)	
98	(W)	

For single-phase connection, use L1 and L2.

6.5.3 Mains connection, enclosures A2 and A3

Check that the mains voltage and frequency correspond to the values on the nameplate of CUE and the motor.

Enclosure	Torque Nm [ft-lb]			
	Mains	Motor	Protective earth	Relay
A2	1.8 (1.3)	1.8 (1.3)	3 (2.2)	0.6 (0.4)
A3	1.8 (1.3)	1.8 (1.3)	3 (2.2)	0.6 (0.4)

1. Fit the mounting plate with two screws.

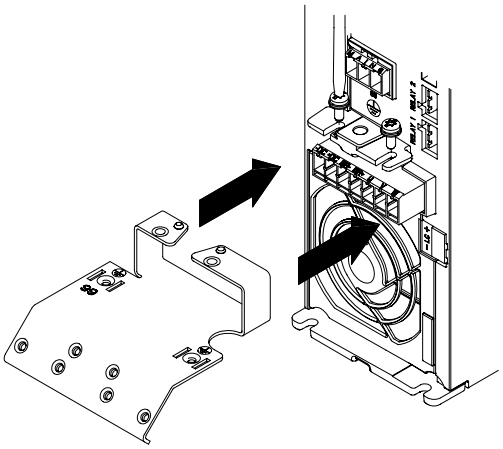

Fitting the mounting plate

2. Connect the earth conductor to terminal 95 (PE) and the mains conductors to terminals 91 (L1), 92 (L2) and 93 (L3) of the mains plug.

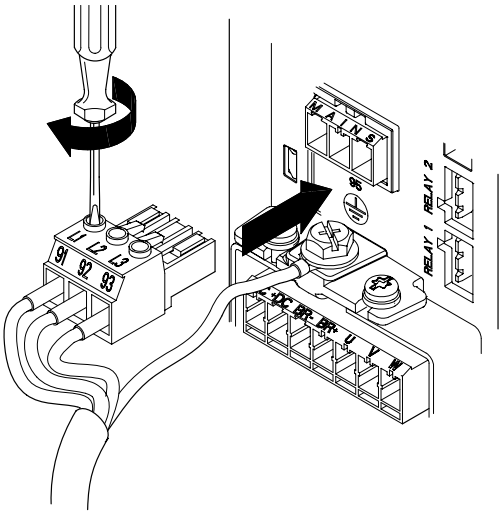

Connecting the earth conductor and mains conductors

For single-phase connection, use L1 and L2.

3. Fix the mains cable to the mounting plate.

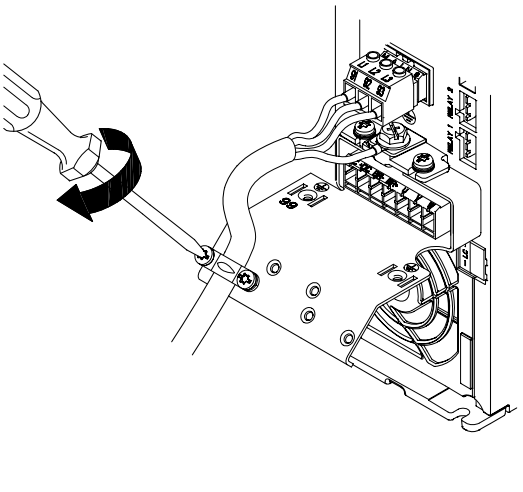

Fixing the mains cable

6.5.4 Motor connection, enclosures A2 and A3

1. Connect the earth conductor to terminal 99 (PE) on the mounting plate.
2. Connect the motor conductors to terminals 96 (U), 97 (V) and 98 (W) of the motor plug.

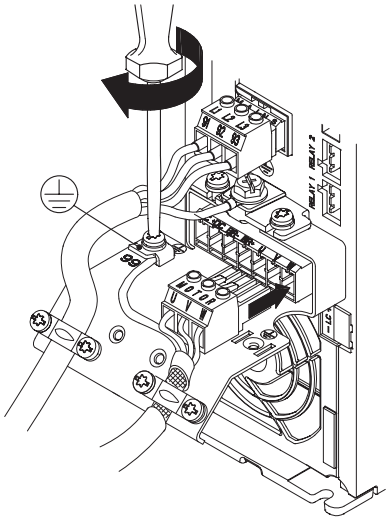

TM074879

Connecting the earth conductor and motor conductors

3. Insert the motor plug into the socket marked "MOTOR".
4. Fix the screened cable to the mounting plate with a cable clamp.

Related information

6.8.3.1 Enclosures A2, A3 and B3

6.5.5 Mains connection, enclosures A4 and A5

Enclosure	Torque Nm [ft-lb]			
	Mains	Motor	Protective earth	Relay
A4	1.8 (1.3)	1.8 (1.3)	3 (2.2)	0.6 (0.4)
A5	1.8 (1.3)	1.8 (1.3)	3 (2.2)	0.6 (0.4)

1. Connect the earth conductor to terminal 95 (PE). See the figure below.
2. Connect the mains conductors to terminals 91 (L1), 92 (L2) and 93 (L3) of the mains plug.
3. Insert the mains plug into the socket marked "MAINS".
4. Fix the mains cable with a cable clamp.

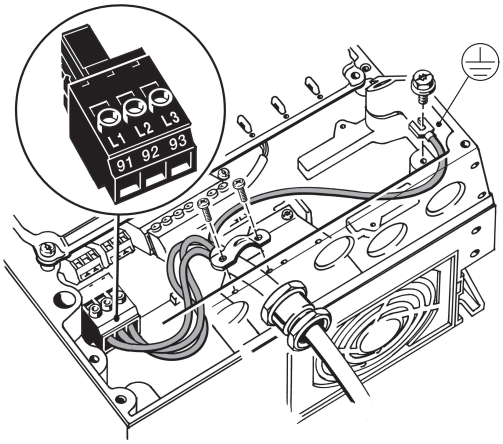

TM039017

Mains connection, A4 and A5

For single-phase connection, use L1 and L2.

6.5.6 Motor connection, enclosures A4 and A5

1. Connect the earth conductor to terminal 99 (PE). See the figure below.
2. Connect the motor conductors to terminals 96 (U), 97 (V) and 98 (W) of the motor plug.
3. Insert the motor plug into the socket marked "MOTOR".
4. Fix the screened cable with a cable clamp.

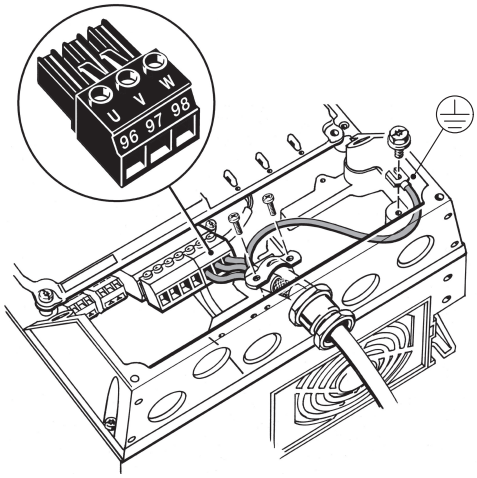

TM039018

Motor connection, A4 and A5

6.5.7 Mains connection, enclosures B1 and B2

Enclosure	Torque Nm [ft-lb]			
	Mains	Motor	Protective earth	Relay
B1	1.8 (1.3)	1.8 (1.3)	3 (2.2)	0.6 (0.4)
B2	4.5 (3.3)	4.5 (3.3)	3 (2.2)	0.6 (0.4)

1. Connect the earth conductor to terminal 95 (PE). See the figure below.
2. Connect the mains conductors to terminals 91 (L1), 92 (L2) and 93 (L3).
3. Fix the mains cable with a cable clamp.

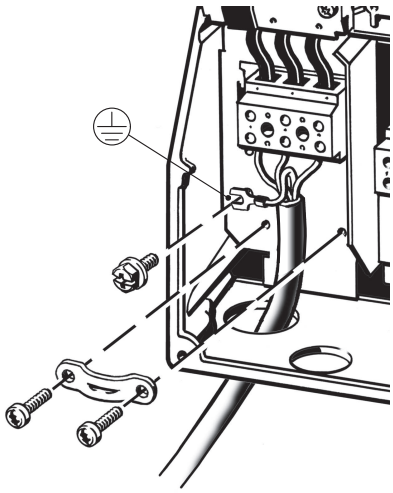

TM039019

Mains connection, B1 and B2

For single-phase connection, use L1 and L2.

6.5.8 Motor connection, enclosures B1 and B2

1. Connect the earth conductor to terminal 99 (PE). See the figure below.
2. Connect the motor conductors to terminals 96 (U), 97 (V) and 98 (W).
3. Fix the screened cable with a cable clamp.

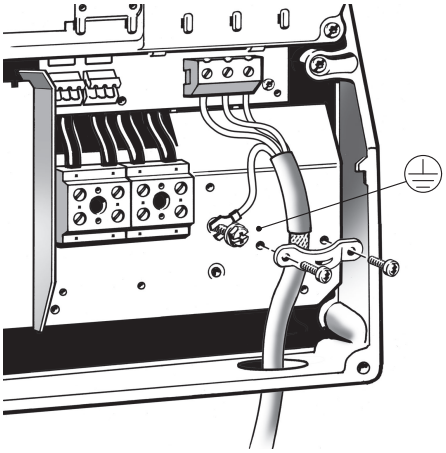

Motor connection, B1 and B2

6.5.9 Mains connection, enclosures B3 and B4

Enclosure	Torque Nm [ft-lb]			
	Mains	Motor	Protective earth	Relay
B3	1.8 (1.3)	1.8 (1.3)	3 (2.2)	0.6 (0.4)
B4	4.5 (3.3)	4.5 (3.3)	3 (2.2)	0.6 (0.4)

1. Connect the earth conductor to terminal 95 (PE). See the figures in the motor connection section for enclosures B3 and B4.
2. Connect the mains conductors to terminals 91 (L1), 92 (L2) and 93 (L3).
3. Fix the mains cable with a cable clamp.

Related information

6.5.10 Motor connection, enclosures B3 and B4

6.5.10 Motor connection, enclosures B3 and B4

1. Connect the earth conductor to terminal 99 (PE). See the figures below.
2. Connect the motor conductors to terminals 96 (U), 97 (V) and 98 (W).
3. Fix the screened cable with a cable clamp.

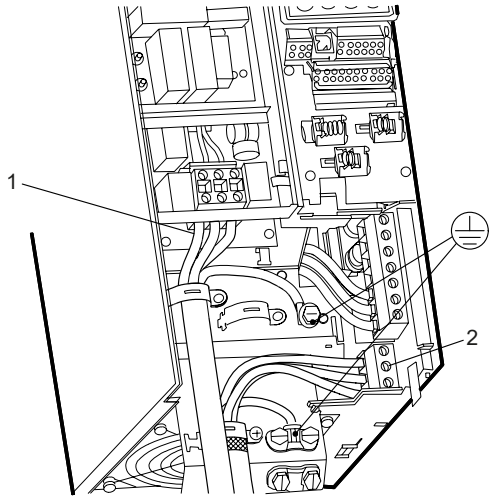

Mains and motor connection, B3

Pos.	Description
1	Mains
2	Motor

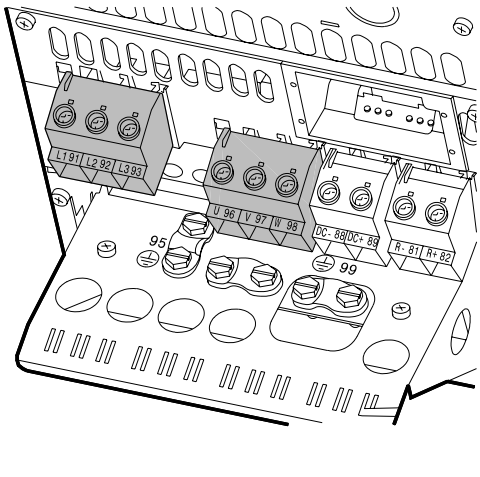

Mains and motor connection, B4

Related information

6.5.9 Mains connection, enclosures B3 and B4

6.5.11 Mains connection, enclosures C1 and C2

Enclosure	Torque Nm [ft-lb]			
	Mains	Motor	Protective earth	Relay
C1	10 (7.4)	10 (7.4)	3 (2.2)	0.6 (0.4)
C2	14 [1]/24 [2] (10.3 [1]/17.7 [2])	14 [1]/24 [2] (10.3 [1]/17.7 [2])	3 (2.2)	0.6 (0.4)

[1] Conductor cross-section ≤ 95 mm^2 (≤ 4/0 AWG)

[2] Conductor cross-section ≥ 95 mm^2 (≥ 4/0 AWG).

1. Connect the earth conductor to terminal 95 (PE). See the section for mains and motor connections for enclosures C1 and C2.
2. Connect the mains conductors to terminals 91 (L1), 92 (L2) and 93 (L3).

Related information

6.5.12 Motor connection, enclosures C1 and C2

6.5.12 Motor connection, enclosures C1 and C2

1. Connect the earth conductor to terminal 99 (PE). See the figure below.
2. Connect the motor conductors to terminals 96 (U), 97 (V) and 98 (W).
3. Fix the screened cable with a cable clamp.

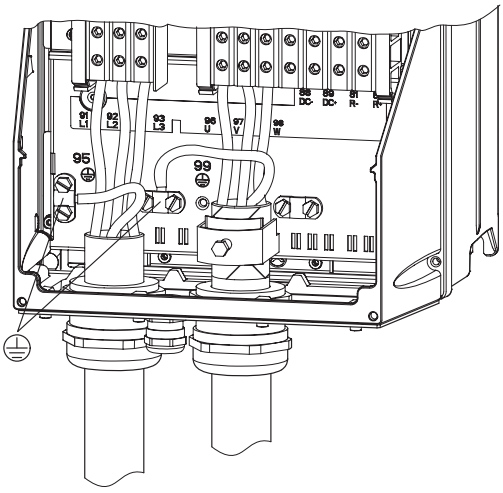

TM039016

Mains and motor connection, C1 and C2

Related information

6.5.11 Mains connection, enclosures C1 and C2

6.5.13 Mains connection, enclosures C3 and C4

Enclosure	Torque Nm [ft-lb]			
	Mains	Motor	Protective earth	Relay
C3	10	10	3 (2.2)	0.6 (0.4)
C4	14 [1]/24 [2] (10.3 [1]/17.7 [2])	14 [1]/24 [2] (10.3 [1]/17.7 [2])	3 (2.2)	0.6 (0.4)

[1] Conductor cross-section ≤ 95 mm^2 (≤ 4/0 AWG)

[2] Conductor cross-section ≥ 95 mm^2 (≥ 4/0 AWG).

1. Connect the earth conductor to terminal 95 (PE). See the section for mains and motor connections for enclosures C3 and C4.
2. Connect the mains conductors to terminals 91 (L1), 92 (L2) and 93 (L3).
3. Fix the mains cable with a cable clamp.

Related information

6.5.14 Motor connection, enclosures C3 and C4

6.5.14 Motor connection, enclosures C3 and C4

1. Connect the earth conductor to terminal 99 (PE). See the figure below.
2. Connect the motor conductors to terminals 96 (U), 97 (V) and 98 (W).
3. Fix the screened cable with a cable clamp.

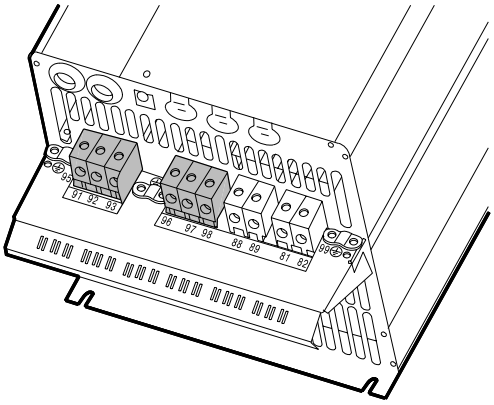

TM039448

Mains and motor connection, C3

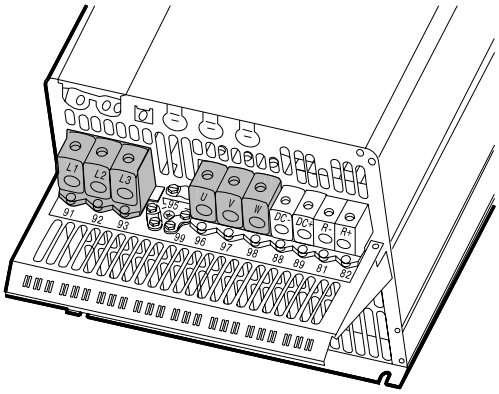

TM039447

Mains and motor connection, C4

Related information

6.5.13 Mains connection, enclosures C3 and C4

6.5.15 Gland plate, enclosures D1h, D2h, D5h and D7h

Cables are connected through the gland plate from the bottom. The gland plate must be fitted to CUE to ensure the specified protection degree as well as to ensure sufficient cooling.

Drill holes in the marked areas. See the figures below.

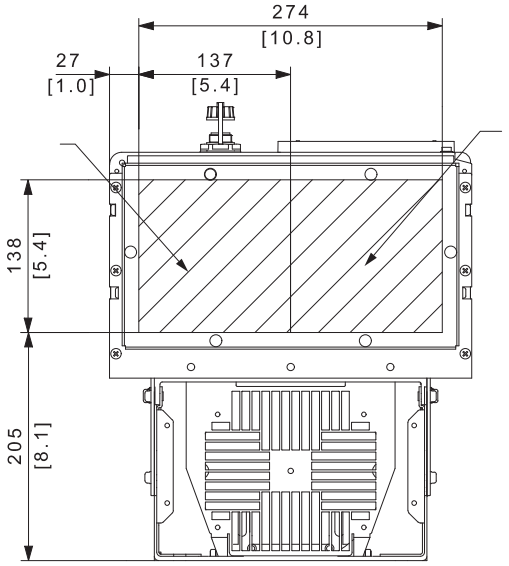

CUE viewed from the bottom [mm]

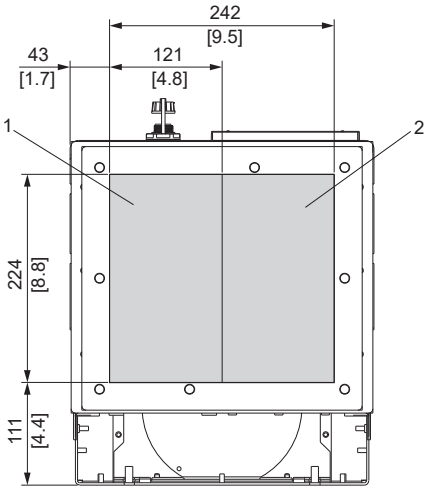

Gland plate, enclosure D5h

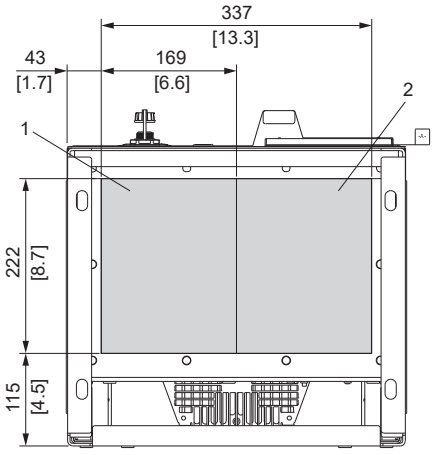

Gland plate, enclosure D7h

6.5.16 Mains connection, enclosures D1h and D2h

Enclosure	Torque Nm [ft-lb]			
	Mains	Motor	Protective earth	Relay
D1h	19-40	19-40	3 (2.2)	0.6 (0.4)
D2h	19-40	19-40	3 (2.2)	0.6 (0.4)

1. Connect the earth conductor to terminal 95 (PE).
2. Connect the mains conductors to terminals 91 (L1), 92 (L2) and 93 (L3).
3. Fix the mains cable with a cable clamp.

6.5.17 Motor connection, enclosures D1h, D2h, D5h and D7h

Take the following terminal positions into consideration when you design the cable connection.

1. Connect the earth conductor to terminal 99 (PE). See the figures below.
2. Connect the motor conductors to terminals 96 (U), 97 (V) and 98 (W).
3. Fix the screened cable with a cable clamp.

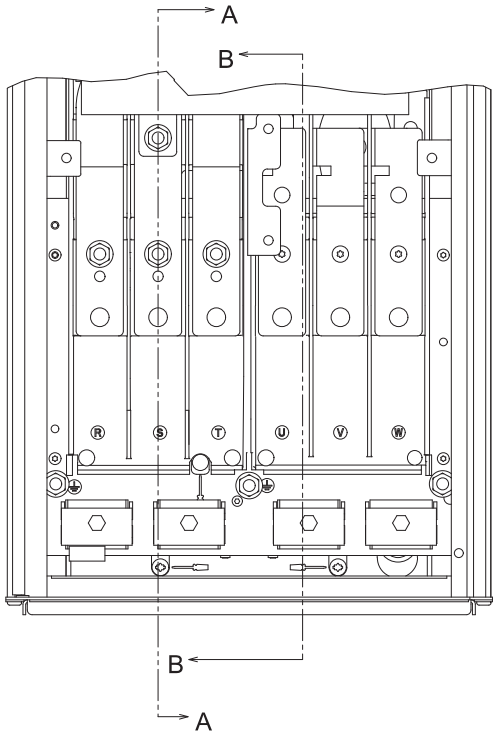

Earth, mains and motor connection for D1h and D2h

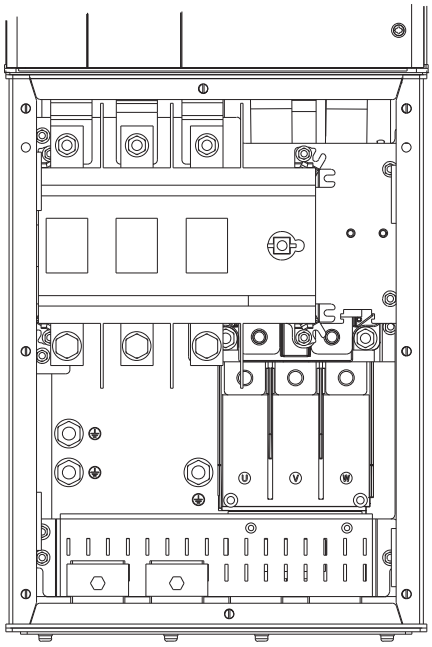

TM077427

Earth, mains and motor connection for D5h

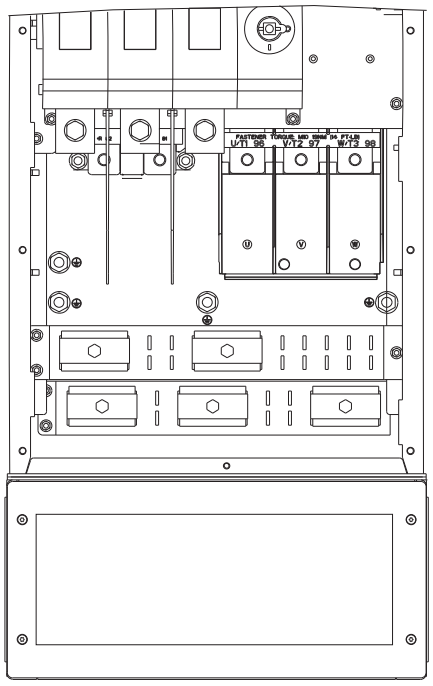

TM077428

Earth, mains and motor connection for D7h

6.6 STO installation, optional

DANGER
Exposure to high pressure or toxic liquids
Death or serious personal injury

- Failure to remove the jumper disables the STO function, and the motor might not stop as intended, and can cause severe injury or death.
- Failure to use safety-monitoring relay compliant with Category 3/PL d according to ISO 13849-1 or SIL 2 according to EN 62061 and IEC 61508 can cause death or serious personal injury. Perform a functional test every 12 months to ensure that the system works properly.

To enable the integrated STO, follow these steps:

1. Remove the jumper wire between control terminals 37 and 12 or 13. Cutting or breaking the jumper is not sufficient to avoid short-circuiting.

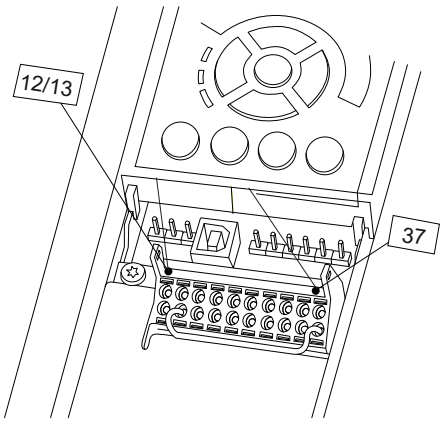

TM074595

1. Connect an external safety-monitoring relay via a NO safety function to terminal 37 (STO) and either terminal 12 or 13, 24 V DC.

Select and apply the components in the safety control system appropriately to achieve the desired level of operational safety. Before integrating and using STO in an installation, carry out a thorough risk analysis on the installation to determine whether the STO functionality and safety levels are appropriate and sufficient.

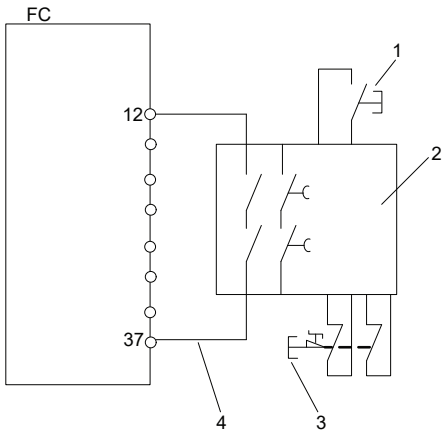

TM074594

STO wiring

Pos.	Description
1	Reset button
2	Safety relay (category 3, PL d or SIL2)
3	Emergency stop button
4	Short-circuit protected cable if the product is not installed inside an IP54 cabinet.

6.6.1 Restart behaviour after STO activation

By default, the STO function is set to unintended-restart prevention behaviour. To terminate STO and resume normal operation with a manual reset, do the following:

- Reapply 24 V DC supply to terminal 37.
- Send a reset signal via bus, Digital I/O or the reset button.
- Set the STO function to automatic restart by changing the value of 5-19 terminal 37 **Safe Stop** from default value 1, **Safe Stop Alarm** to value 3, **Safe Stop Warning**.

Automatic restart means that STO is terminated and normal operation is resumed, as soon as the 24 V DC is applied to terminal 37. No reset signal is required.

Related information

6.7 Connecting the signal terminals

6.6.2 Restart settings

- Remove the 24 V DC voltage supply to terminal 37 using the interrupt device while the frequency converter drives the motor, that is the mains supply is not interrupted.
- Check that the motor coasts and that the alarm **Safe Stop** displays in the local operating panel, if mounted.
- Reapply 24 V DC to terminal 37.
- Make sure that the motor remains in the coasted state.
- Send a reset signal via bus, Digital I/O or the reset button.
- Make sure that the motor becomes operational again.

6.7 Connecting the signal terminals

As a precaution, signal cables must be separated from other cable groups by reinforced insulation in their entire lengths.

Connect the signal cables according to the guidelines for good practice to ensure EMC-correct installation.

- Use screened signal cables with a cable cross-section of minimum 0.5 mm^2 and maximum 1.5 mm^2.
- Use a 3-conductor screened bus cable in new systems.

Related information

6.6.1 Restart behaviour after STO activation

6.7.1 Wiring diagram, signal terminals

U: 0-10 V

I: 0/4-20 mA

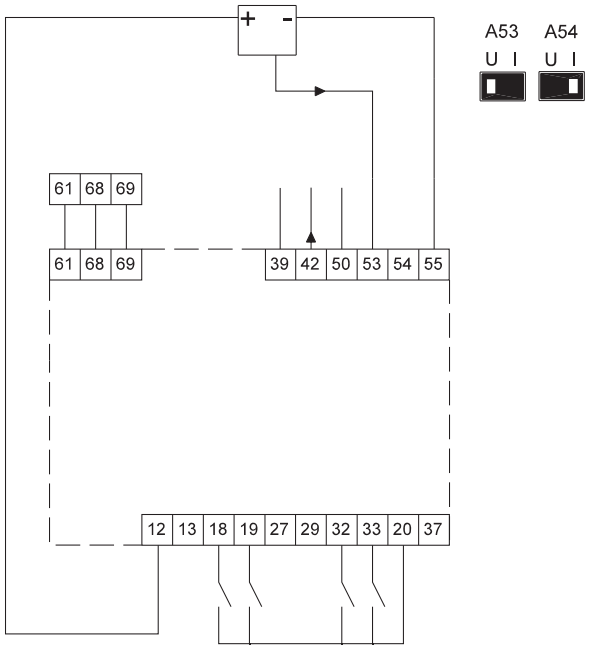

External setpoint, voltage input

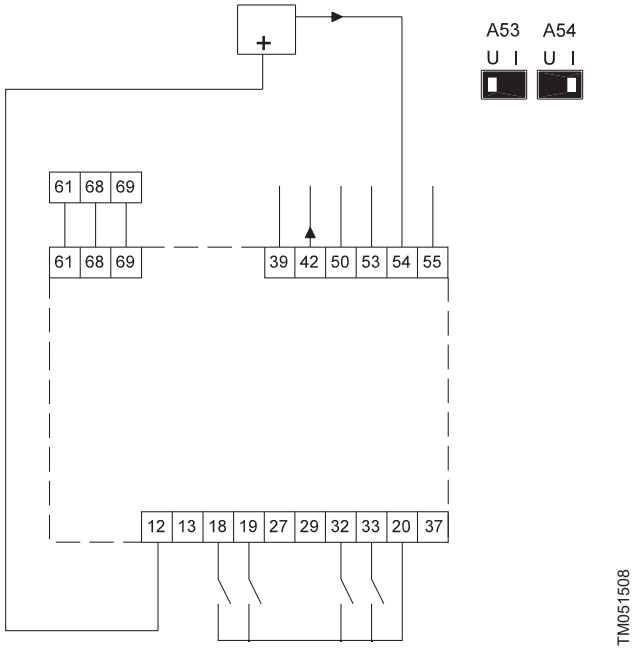

2-wire sensor

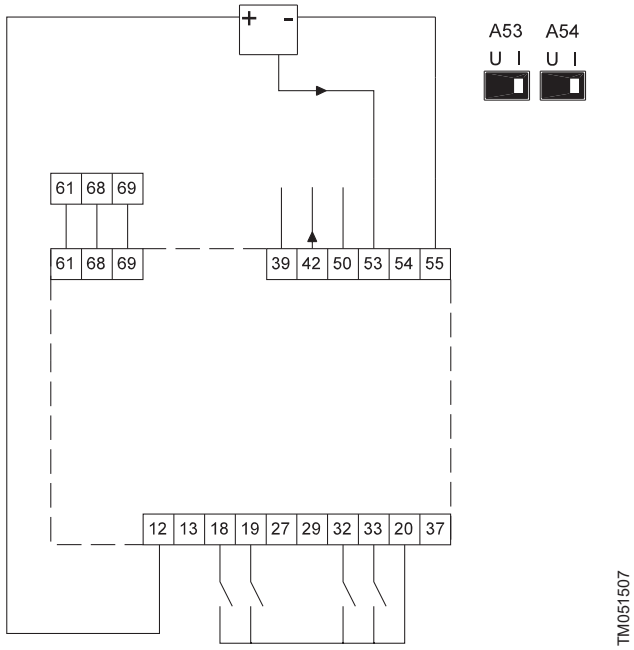

External setpoint, current input

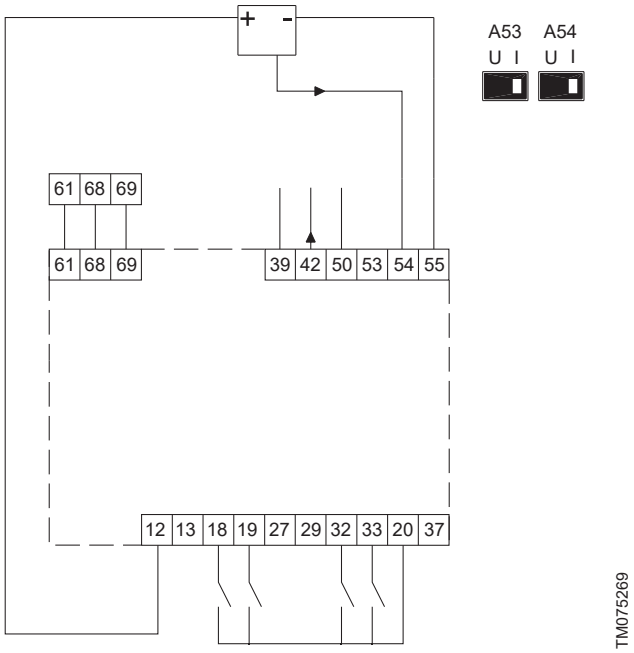

3-wire sensor

Terminal	Type	Function
12	+24 V out	Supply to sensor
13	+24 V out	Additional supply
18	DI 1	Digital input, programmable
19	DI 2	Digital input, programmable
20	GND	Common frame for digital inputs
27	DI/O 1	Digital input/output, programmable
29	DI/O 2	Digital input/output, programmable
32	DI 3	Digital input, programmable
33	DI 4	Digital input, programmable
37	Safe stop	Safe stop
39	GND	Frame for analog output
42	AO 1	Analog output, 0-20 mA
50	+10 V out	Supply to potentiometer
53	AI 1	External setpoint, 0-10 V, 0/4-20 mA
54	AI 2	Sensor input, sensor 1, 0/4-20 mA
55	GND	Common frame for analog inputs
61	RS-485 GND Y	GENIbus, frame
68	RS-485 A	GENIbus, signal A (+)
69	RS-485 B	GENIbus, signal B (-)

The RS-485 screen must be connected to the frame.

6.7.2 Connection of a thermistor (PTC) to CUE

A PELV circuit provides protection against electric shock. Special connection requirements apply to this type of circuit. The requirements are described in EN 61800-5-1.

In order to maintain PELV, all connections made to the control terminals must be PELV. For example, the thermistor must have reinforced or double insulation.

6.7.2.1 Accessing the signal terminals

All signal terminals are behind the terminal cover on the front side of CUE. Remove the terminal cover as shown in the figures below.

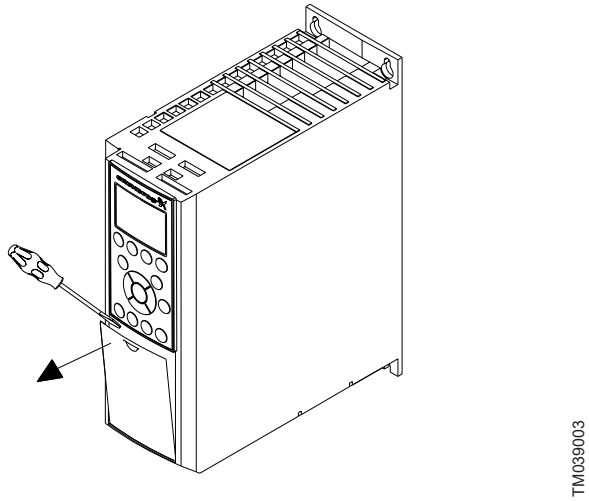

Access to signal terminals, A2 and A3

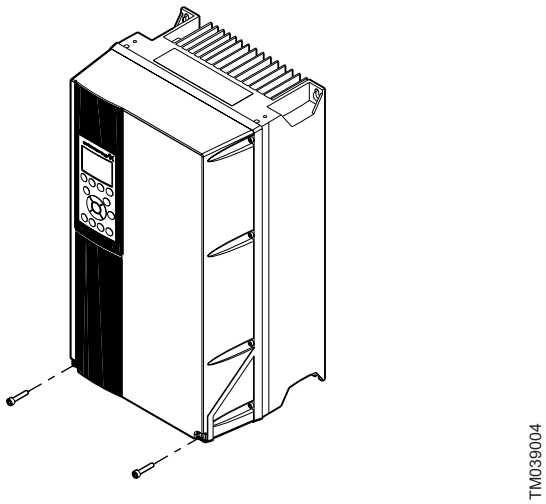

Access to signal terminals, A4, A5, B1, B2, B3, B4, C1, C2, C3 and C4

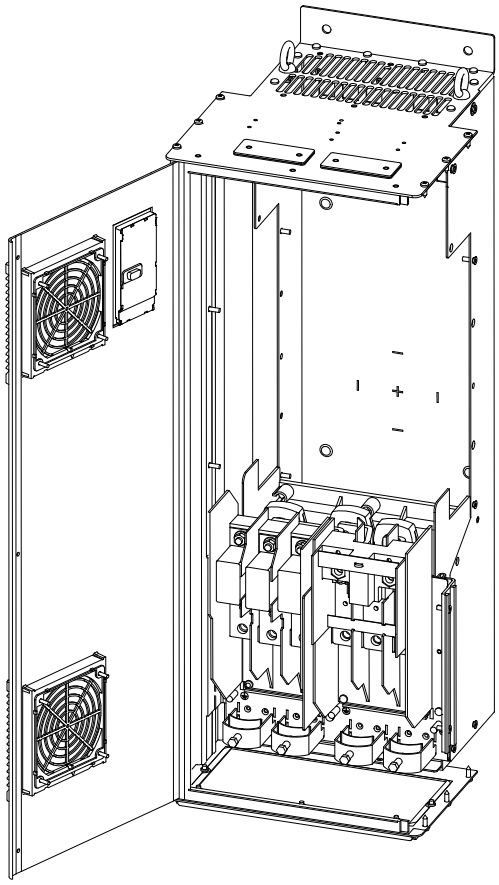

TM059654

Access to signal terminals, D1h and D2h

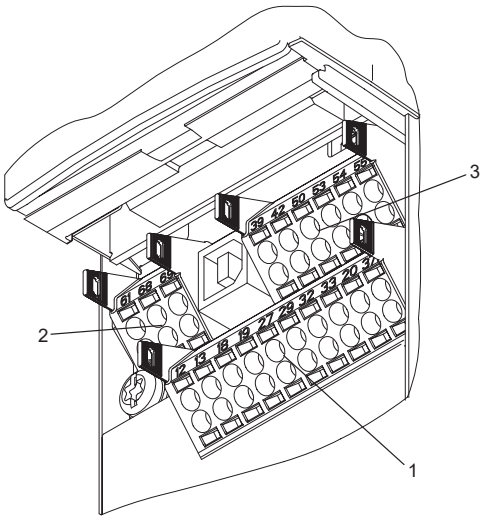

TM039025

Signal terminals, all enclosures

6.7.2.2 Fitting the conductor

1. Remove the insulation at a length of 9 to 10 mm.
2. Insert a screwdriver with a tip of maximum 0.4 × 2.5 mm into the square hole.
3. Insert the conductor into the corresponding round hole. Remove the screwdriver. The conductor is now fixed in the terminal.

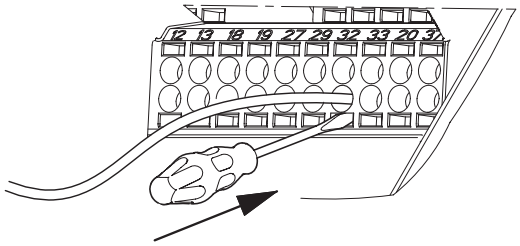

TM039026

Fitting the conductor into the signal terminal

6.7.2.3 Setting the analog inputs, terminals 53 and 54

Contacts A53 and A54 are positioned behind the operating panel and used for setting the signal type of the two analog inputs.

The factory setting of the inputs is voltage signal "U".

If a 0/4-20 mA sensor is connected to terminal 54, the input must be set to current signal "I".

Switch off the power supply before setting contact A54.

Remove the operating panel to set the contact. See the figure below.

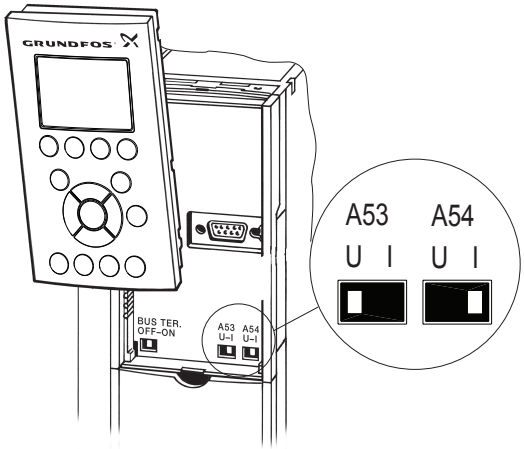

TM039104

Setting contact A54 to current signal "I"

6.7.2.4 RS-485 GENIbus network connection

One or more CUE units can be connected to a control unit via GENIbus.

The reference potential, GND, for RS-485 (Y) communication must be connected to terminal 61.

If more than one CUE unit is connected to a GENIbus network, the termination contact of the last CUE must be set to ON (termination of the RS-485 port).

The factory setting of the termination contact is OFF (not terminated).

Remove the operating panel to set the contact. See the figure below.

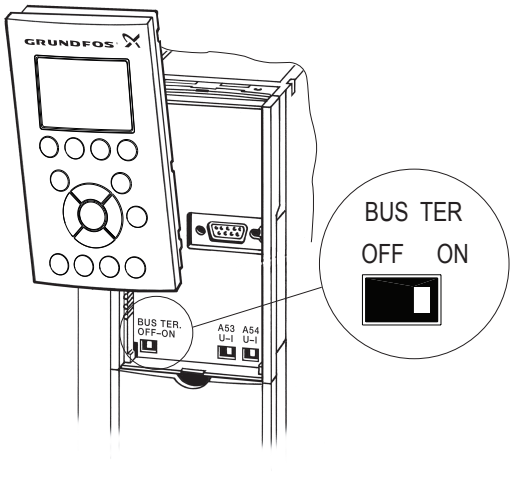

TM039006

Setting the termination contact to ON

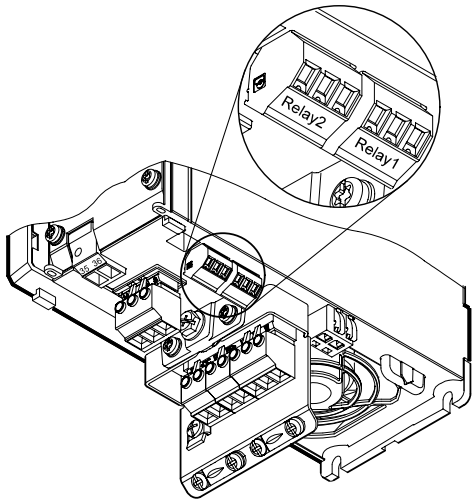

TM039007

Terminals for relay connection, A2 and A3

6.8 Connecting the signal relays

As a precaution, signal cables must be separated from other cable groups by reinforced insulation in their entire lengths.

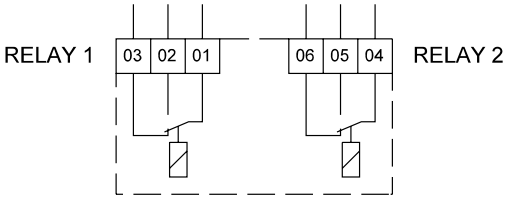

TM038801

Terminals for signal relays in normal state (not activated)

Terminal		Function
C 1	C 2	Common
NO 1	NO 2	Normally open contact
NC 1	NC 2	Normally closed contact

6.8.1 Access to signal relays

The relay outputs are positioned as shown in the figures below.

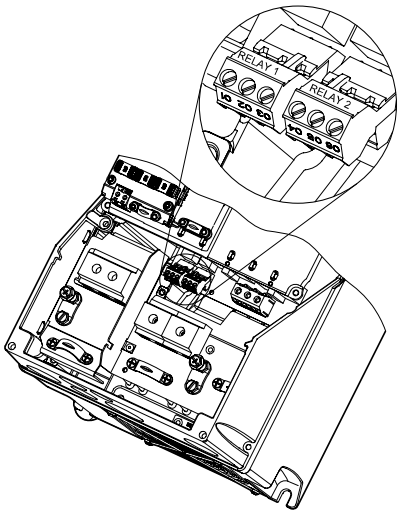

TM039008

Terminals for relay connection, A4, A5, B1 and B2

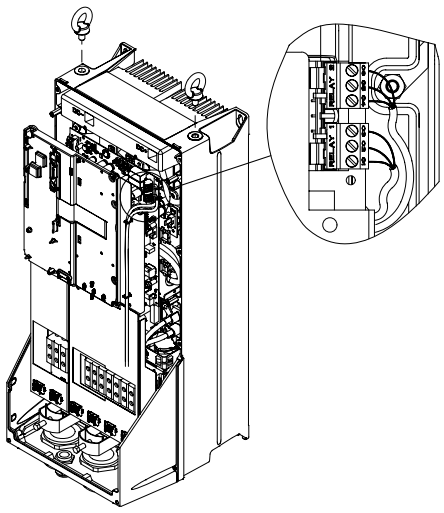

TM039009

Terminals for relay connection, C1 and C2

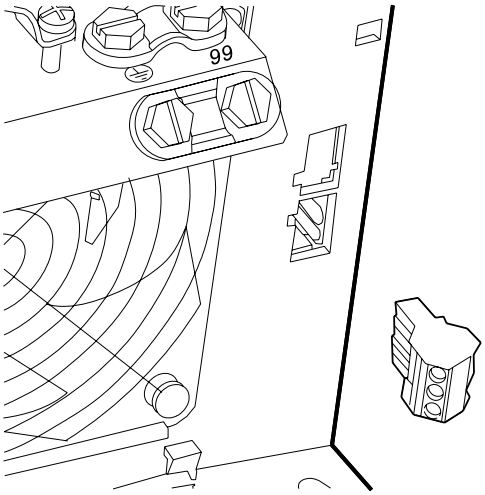

TM039442

Terminals for relay connection, B3

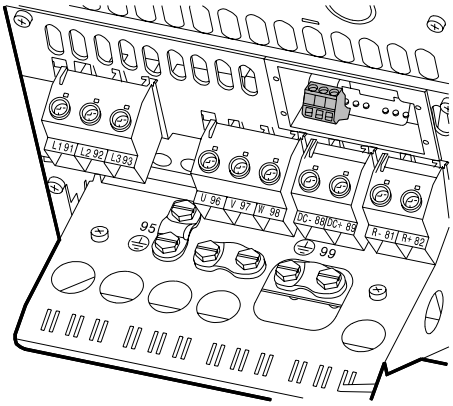

TM039441

Terminals for relay connection, B4

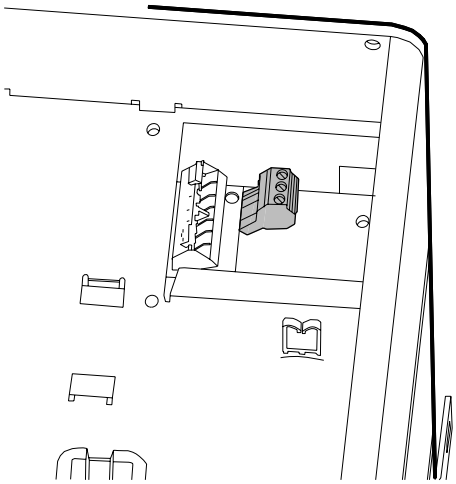

TM039440

Terminals for relay connection, C3, C4, D1h, D2h, D5h and D7h, in the upper right corner of CUE

6.8.2 Connecting the MCB 114 sensor input module

MCB 114 is an option offering additional analog inputs for CUE.

6.8.2.1 Configuration of MCB 114

MCB 114 is equipped with three analog inputs for the following sensors:

- One additional sensor 0/4-20 mA.
- Two Pt100/Pt1000 temperature sensors for measurement of motor bearing temperature or an alternative temperature, such as liquid temperature.

When MCB 114 is installed, CUE automatically detects if the sensor is Pt100 or Pt1000 when it is switched on.

6.8.2.2 Wiring diagram, MCB 114

! When using Pt100 with a 3-wire cable, the resistance must not exceed 30 Ω.

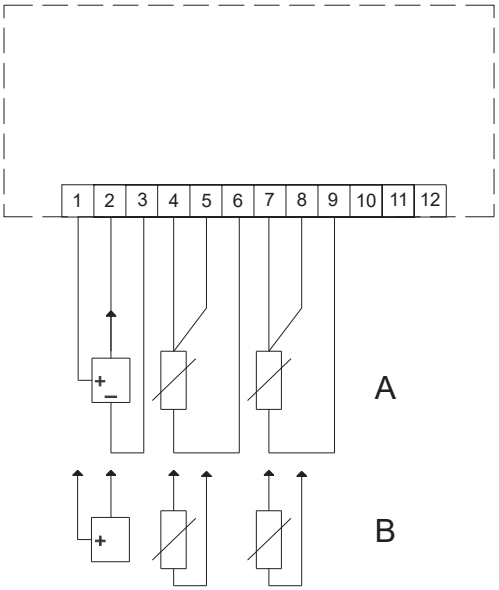

TM075432

Wiring diagram, MCB 114

Terminal	Type	Function
1 (VDO)	+24 V out	Supply to sensor
2 (I IN)	AI 3	Sensor 2, 0/4-20 mA
3 (GND)	GND	Common frame for analog input
4 (TEMP) 5 (WIRE)	AI 4	Temperature sensor 1, Pt100/Pt1000
6 (GND)	GND	Common frame for temperature sensor 1
7 (TEMP) 8 (WIRE)	AI 5	Temperature sensor 2, Pt100/Pt1000
9 (GND)	GND	Common frame for temperature sensor 2
A	-	3-wire
B	-	2-wire

Terminals 10, 11 and 12 are not used.

6.8.3 Fitting MCB 114 in CUE

6.8.3.1 Enclosures A2, A3 and B3

1. Switch off the power to CUE. See the section regarding mains and motor connection.
2. Remove the operating panel, the terminal cover and the frame from CUE. See the figure below.
3. Fit MCB 114 into port B.
4. Connect the signal cables, and fasten the cables with the enclosed cable strips.
5. Remove the knock-out plate in the extended frame so that MCB 114 fits under the extended frame.
6. Fit the extended frame and the terminal cover.

7. Fit the operating panel in the extended frame.
8. Connect power to CUE.

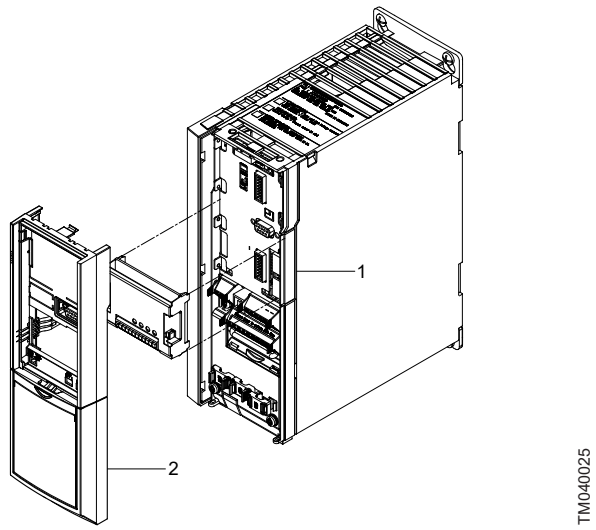

Enclosures A2, A3 and B3

Pos.	Description
1	Port B
2	Frame

Related information

6.5.4 Motor connection, enclosures A2 and A3

6.5 Mains and motor connection

6.8.3.2 Enclosures A5, B1, B2, B4, C1, C2, C3, C4, D1 and D2

1. Switch off the power to CUE.
2. Remove the operating panel and the cradle from CUE. See the figure below.
3. Fit MCB 114 into port B.
4. Connect the signal cables, and fasten the cables with the enclosed cable strips. See the figure below.
5. Fit the cradle and the operating panel.
6. Connect power to CUE.

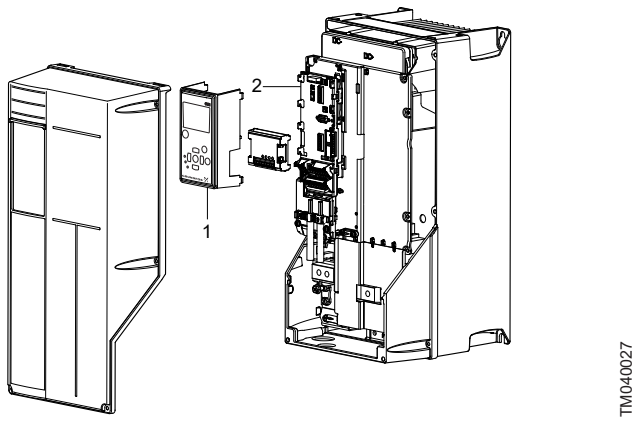

Enclosures A5, B1, B2, B4, C1, C2, C3, C4, D1 and D2

Pos.	Description
1	Cradle
2	Port B

Related information

6.5 Mains and motor connection

7. Starting up the product

Any installation, maintenance and inspection must be carried out by trained persons.

Before you switch on the power supply, you must do the following:

- Close the cover.
- Make sure that all cable glands are tightened properly.
- Make sure that there is no phase-to-phase and phase-to-earth voltage on the output terminals.
- Confirm continuity of the motor by measuring Ω values on U-V, V-W and W-U.
- Check for proper earthing of the frequency converter and the motor.
- Check that there are no loose connections on the terminals.
- Confirm that the supply voltage matches the voltage of the frequency converter and the motor.

7.1 Switching on the product

- Confirm that the input voltage is balanced within 3 %. If not, correct the input-voltage imbalance before proceeding. Repeat this procedure after the voltage correction.
- Make sure that the wiring of any optional equipment matches the installation application.
- Make sure that all operator devices are in the OFF position. The panel doors must be closed, and covers must be securely fastened.
- Apply power to the unit, but do not start the frequency converter yet. For units with a disconnect switch, turn it to the ON position to apply power to the frequency converter.

7.2 Activating the optional STO function

The STO function is activated by removing the voltage at terminal 37 of the frequency converter. By connecting the frequency converter to external safety devices providing a safe delay, an installation for a Safe Stop 1 is obtained. External safety devices need to fulfil Cat./PL or SIL when connected to terminal 37.

The STO function can be used for the following motor types:

- asynchronous
- synchronous
- permanent magnet motors.

When terminal 37 is activated, the frequency converter issues an alarm, trips the unit and coasts the motor to a stop. A manual restart is required. Use the STO function to stop the frequency converter in emergency stop situations. In normal operating mode, the STO terminal 37 must be deactivated to start the motor.

A successful commissioning test of the STO function is required after the initial installation and after each subsequent change to the installation.

8. Control functions

The display contrast can be adjusted by pressing [Status] and then pressing [Up] or [Down].

8.1 Operating panel

The operating panel consists of a display and several buttons. It enables manual setting and monitoring of the system, such as follows:

- Start, stop and control of speed.
- Reading of operating data and warnings and alarms.
- Setting functions for the frequency converter.
- Manual reset of the frequency converter.

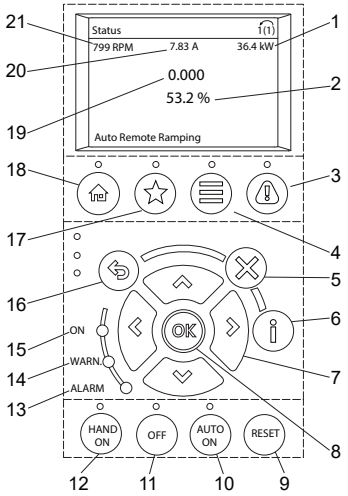

TM074597

Operating panel

Pos.	Buttons	Description
1		Power [kW]
2		Reference [%]
3		[Alarm log]: shows a list of current warnings, the last 10 alarms and the maintenance log.
4		[Main menu]: allows access to all programming settings.
5		[Cancel]: cancels the last change or command as long as the display mode has not changed.
6		[Info]: press for a definition of the function being displayed.
7		[Up]/[Down]/[Left]/[Right]: use the four arrow buttons to navigate between items in the menu.
8	OK	**OK**: used to access parameter groups or to accept a selection.
9	RESET	**RESET**: resets the frequency converter manually after a fault has been cleared.
10	AUTO ON	**AUTO ON**: puts the system in remote operating mode. • Responds to an external start command by control terminals or serial communication.
11	OFF	**OFF**: stops the motor, but does not remove power to the frequency converter.
12	HAND ON	**HAND ON**: starts the frequency converter in local control. • An external stop signal by control input or serial communication overrides the local **HAND ON** function.
13	**ALARM** Red	A fault condition causes the red alarm light to flash, and an alarm text is displayed.
14	**WARN.** Yellow	When warning conditions are met, the yellow warning light comes on and text appears in the display area identifying the problem.
15	**ON** Green	The **ON** light activates when the frequency converter receives power from the mains voltage, a DC bus terminal or an external 24 V supply.
16		[Back]: reverts to the previous step or list in the menu structure.
17		[Favourites]: allows access to programming parameters for initial setup instructions and many detailed application instructions.
18		[Status]: shows operating information.
19		Frequency
20		Motor current
21		Speed, RPM

Related information

9. Setting the product

8.2 Menu overview

Overview of the main menus. The ** represents a number to a submenu.

Press **OK** to select a menu and use the [Up] and [Down] buttons to navigate in the menus.

Example: To get to the menu **1-28 Motor Rotation Check**, you must do the following:

1. Navigate to **1-** Load and Motor**, and press **OK**.
2. Use the [Up] and [Down] buttons to navigate to **1-2* Motor Data**, and press **OK**.
3. Use the [Up] and [Down] buttons to navigate to **1-28 Motor Rotation Check**, and press **OK** to select the menu.

Related information

8.3 Menu structure

9. Setting the product

8.3 Menu structure

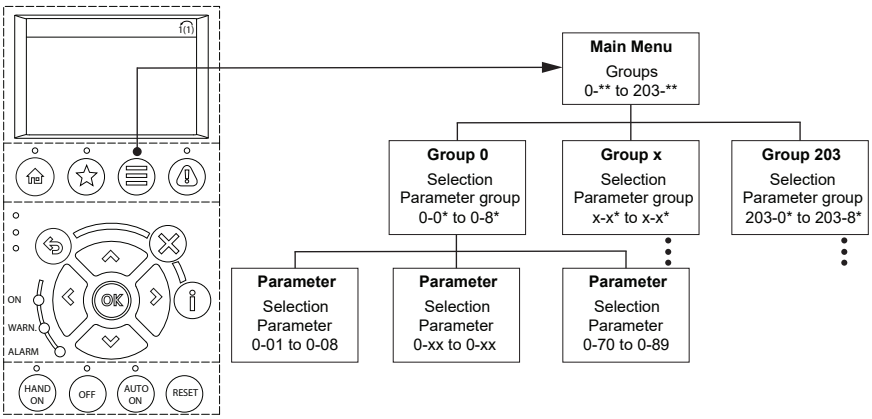

TM078811

0- Operation / Display**	**14-** Special Functions**	**27-** Cascade CTL Option**
0-0* Basic Settings	**14-0* Inverter Switching**	**27-0* Control & Status**
0-1* Set-up Operations	**14-1* Mains On/Off**	**27-1* Configuration**
0-2* LCP Display	**14-2* Reset Functions**	**27-2* Bandwidth Settings**
0-4* LCP Keypad	**14-3* Current Limit Ctrl.**	**27-3* Staging Speed**
0-5* Copy/Save	**14-4* Energy Optimising**	**27-4* Staging Settings**
0-6* Password	**14-5* Environment**	**27-5* Alternate Settings**
0-7* Clock Settings	**14-6* Auto Derate**	**27-6* Digital Inputs**
1- Load and Motor**	**14-8* Options**	**27-7* Connections**
1-0* General Settings	**14-9* Fault Settings**	**27-8* Advanced Settings**
1-1* Motor Selection	**15-** Drive Information**	**27-9* Readouts**
1-1* VVC+ PM	**15-0* Operating Data**	**29-** Water Application Functions**
1-2* Motor Data	**15-3* Alarm Log**	**29-0* Pipe Fill**
1-3* Adv. Motor Data	**15-4* Drive Identification**	**29-1* Deragging Function**
1-5* Load Indep. Setting	**15-6* Option Ident**	**29-2* Derag Power Tuning**
1-6* Load Depen. Setting	**15-8* Operating Data II**	**29-4* Pre/Post Lube**
1-7* Start Adjustments	**15-9* Parameter Info**	**30-** Special Features**
1-8* Stop Adjustments	**16-** Data Readouts**	**30-2* Adv. Start Adjust**
1-9* Motor Temperature	**16-0* General Status**	**35-** Sensor Input Option**
2- Brakes**	**16-1* Motor Status**	**35-0* Temp. Input Mode**
2-0* DC-Brake	**16-3* Drive Status**	**35-1* Temp. Input X48/4**
2-1* Brake Energy Funct.	**16-5* Ref. & Feedb.**	**35-2* Temp. Input X48/7**
4- Limits / Warnings**	**16-6* Inputs & Outputs**	**35-3* Temp. Input X48/10**
4-1* Motor Limits	**16-8* Fieldbus & FC Port**	**35-4* Analog Input X48/2**
4-5* Adj. Warnings	**16-9* Diagnosis Readouts**	**40-** Special Settings**
4-6* Speed Bypass	**18-** Info & Readouts**	**40-4* Extended. Alarm Log**
5- Digital In/Out**	**18-0* Maintenance Log**	**200 - Operation Settings**
5-0* Digital I/O mode	**18-3* Analog Readouts**	**200-0* Operation Settings**
5-1* Digital Inputs	**18-6* Inputs & Outputs 2**	**200-1* Setpoint Handling**
5-3* Digital Outputs	**20-** Drive Closed Loop**	**200-2* Proportional Pressure Setup**
5-4* Relays	**20-0* Feedback**	**200-4* Pump Setup**
5-8* I/O Options	**20-2* Feedback/Setpoint**	**200-5* Special Command Parameters**
6- Analog In/Out**	**20-8* PID Basic Settings**	**200-6* Setpoint Configuration Parameters**
6-1* Analog Input 53	**20-9* PID Controller**	**200-7* Configuration Command Parameters**
6-2* Analog Input 54	**21-** Ext. Closed Loop**	**201- Key Functions**
6-5* Analog Output 42	**21-1* Ext. CL 1 Ref./Fb.**	**201-0* Limit Exceed**
8- Comm. and Options**	**21-2* Ext. CL 1 PID**	**201-1* Bearing Supervision**

8-0* General Settings	**21-3* Ext. CL 2 Ref./Fb.**	**201-3* Constant Pressure Stop Function**
8-1* Control Settings	**21-4* Ext. CL 2 PID**	**201-5* Stop Adjustments Ext.**
8-3* FC Port Settings	**22-** Appl. Functions**	**202 - Sensors**
8-4* FC MC protocol set	**22-0* Miscellaneous**	**202-0* Analog Input Sensor Setup**
8-5* Digital/Bus	**22-2* No-Flow Detection**	**202-1* Temperature Input Sensor Setup**
8-8* FC Port Diagnostics	**22-3* No-Flow Power Tuning**	**203 - Status Monitor**
8-9* Bus Jog / Feedback	**22-4* Sleep Mode**	**203-0* Grundfos Readouts**
13- Smart Logic**	**22-5* End of Curve**	**203-1* GENIbus**
13-1* Comparators	**23-** Timer-based Functions**	**203-3* Alarm/Warning Log**
13-1* RS Flip Flops	**23-0* Timed Actions**	**203-4* Accumulated Flow**
13-4* Logic Rules	**23-1* Maintenance**	**203-5* GENIbus Readout Parameters**
	23-1* Maintenance Reset	**203-7* GENIbus Setpoint Readout**
	23-5* Energy Log	**203-8* Misc. Functions**
	23-6* Trending	
	23-8* Payback Counter	

Related information

8.2 Menu overview

8.4 Operating modes

The following operating modes are set on the operating panel using the [Favourites] menu.

Operating mode	Description
Normal	The pump is running in the operating mode selected.
Stop	The pump has been stopped, and the green indicator light is flashing.
Min.	The pump is running at minimum speed.
Max.	The pump is running at maximum speed.
User curve	The pump is running at a user-defined speed.

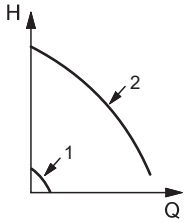

Minimum and maximum curves

The pump speed is kept at a given set value for minimum and maximum speed.

Pos. 1: Minimum

Pos. 2: Maximum

Examples:

- Maximum curve operation can, for instance, be used in connection with venting the pump during installation.
- Minimum curve operation can, for instance, be used in periods with a very small flow rate requirement.

8.5 Control modes

The control mode is set in the [Favourites] menu.

There are two basic control modes:

- Uncontrolled operation (open loop).
- Controlled operation (closed loop) with a sensor connected.

Related information

8.5.1 Uncontrolled operation (open loop)

8.5.2 Controlled operation (closed loop)

8.5.1 Uncontrolled operation (open loop)

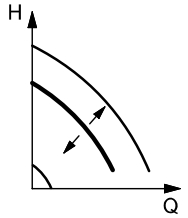

Constant curve

The speed is kept at a set value in the range between the minimum and maximum curves.

The setpoint is set in % corresponding to the required speed.

Examples:

- Operation on constant curve can, for instance, be used for pumps with no sensor connected.
- Typically used in connection with an overall control system, such as MPC or another external controller.

Related information

8.5 Control modes

8.5.2 Controlled operation (closed loop)

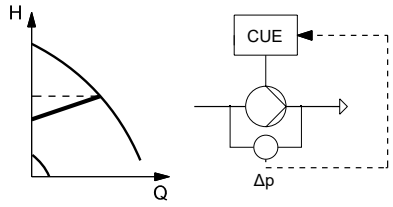

Proportional differential pressure

The differential pressure is reduced at falling flow rate and increased at rising flow rate.

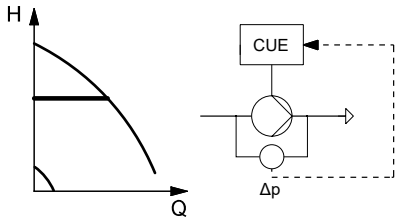

Constant differential pressure, pump

The differential pressure is kept constant, independently of the flow rate.

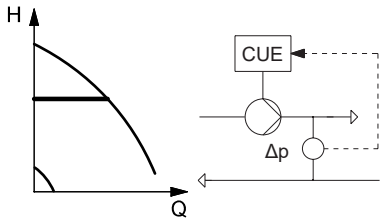

Constant differential pressure, system

The differential pressure is kept constant, independently of the flow rate.

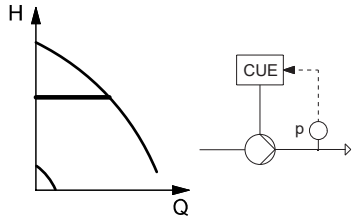

Constant pressure

The pressure is kept constant, independently of the flow rate.

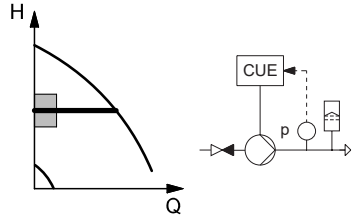

Constant pressure with stop function

The outlet pressure is kept constant at high flow rate. On/off operation at low flow rate.

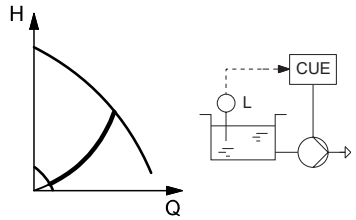

Constant level

The liquid level is kept constant, independently of the flow rate.

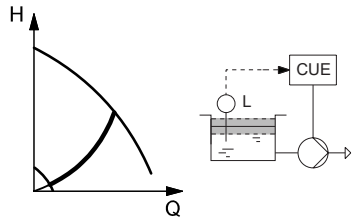

Constant level with stop function

The liquid level is kept constant at high flow rate.

On/off operation at low flow rate.

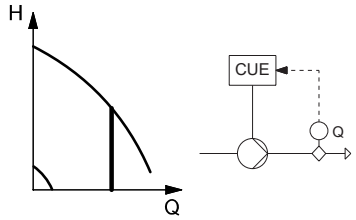

Constant flow rate

The flow rate is kept constant, independently of the head.

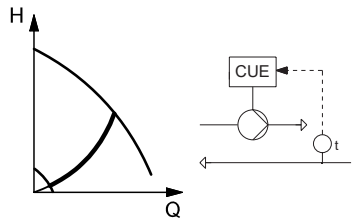

Constant temperature

The liquid temperature is kept constant, independently of the flow rate.

Related information

8.5 Control modes

9. Setting the product

For correct programming, it is often necessary to make settings in several submenus. The programmed data is saved internally in the frequency converter.

It is possible to make a backup of the data by uploading them to the operating panel's memory.

The menus are accessed or changed from the [Main Menu] or [Favourites] on the operating panel. However, not all menus are available in [Favourites].

All settings that have been made are visible in [Favourites]**Q5** > **Changes Made**.

Related information

8.1 Operating panel

8.2 Menu overview

9.1 First-time setup via the startup guide

The startup guide starts automatically the first time the product is switched on or after startup of the frequency converter. The guide enables quick configuration of basic pump- and application parameters.

Make sure that the equipment connected is ready for startup.

Make sure that CUE is connected to the power supply.

Make sure that you have the nameplate data for the motor, pump and CUE, since you need to enter some data during startup.

Reactivate the startup guide by pressing [Favourites] **Q4** > **Run start-up guide**

1. Press **OK** to begin the startup guide. Follow the on-screen instructions to complete the commissioning of the frequency converter. Some data from the motor nameplate is needed.

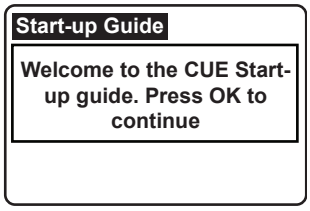

TM077488

Welcome screen

2. Press **OK** to choose the desired language then the down arrow key for the coming steps.

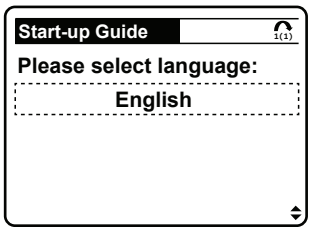

TM077489

Language

3. Select the unit type depending on the region where CUE is installed.

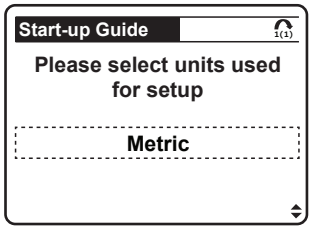

TM077490

Units

4. Select a specific pump type, or select "Other" for an unrestricted setting.

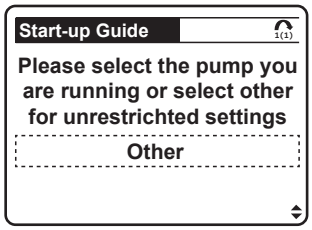

TM077491

Pump types

5. Select the required motor type (Asynchronous motor, PM Assisted Sync. Reluctance motor, IPM motor, SPM motor) and follow the startup guide. It is possible to skip the motor settings and the thermal protection parameters. Based on the motor type, the related parameters appear for adjustment.

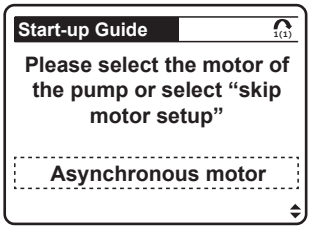

TM077492

Motor types

6. If there is a sine-wave filter installed, select "Yes" and define the switching frequency on the next screen. In the example below, it is assumed that there is no sine-wave filter installed.

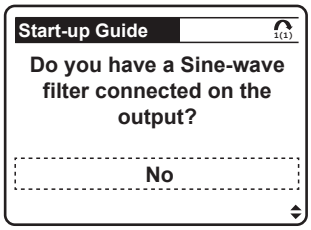

TM077493

Sine-Wave filter

7. The motor should be properly connected to CUE. AMA measures the electrical characteristics of the motor to provide an accurate electronic model of the motor and does not cause the motor to run. By selecting "Yes", you can go to the next steps.

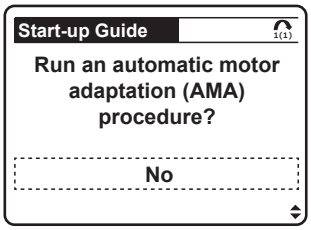

TM077494

Run AMA

8. Enter the acceleration time from 0 RPM to the rated motor speed and the deceleration time from the rated motor speed to 0 RPM.

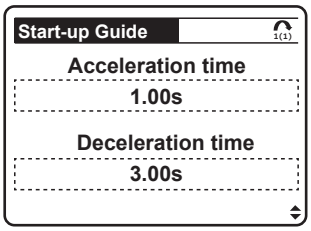

TM077510

Acceleration and deceleration time

9. Enter the ramp time between 0 RPM and the minimum speed.

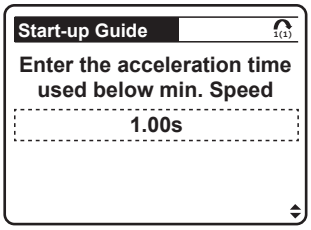

TM077511

Initial ramp time

10. The direction of rotation is set for CUE by default. If needed, double-check the direction of rotation by selecting "Yes", and follow the coming steps. If "Other" pump type is selected, there are two screens after the direction check: Min. frequency and Max. frequency.

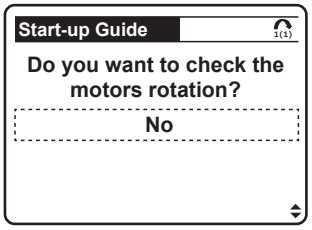

TM077512

Direction of rotation check

11. Select the relevant control mode for the desired application. It is preset according to the pump type selected by the user.

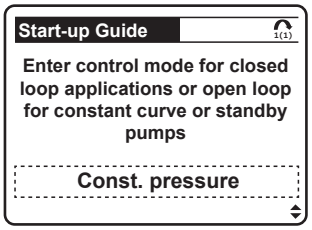

TM077549

Control mode

12. This screen is shown if the user has chosen one of the closed-loop control modes.

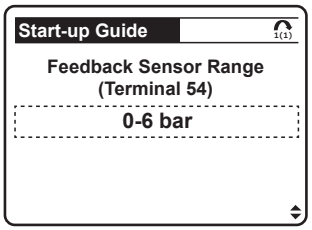

TM077550

Feedback sensor range

13. After choosing the sensor range, the user needs to select the electrical signal range that should be selected according to the dip-switch adjustment.

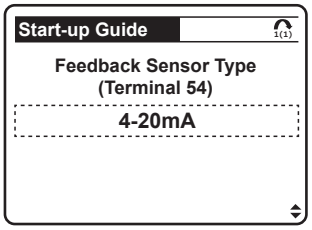

TM077551

Feedback sensor type

14. The setpoint can be influenced by the external setpoint input, and the electrical signal must be configured in this step.

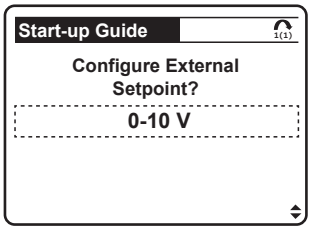

TM077552

External setpoint configuration

15. Here you can set a multipump system with multiple pumps connected in parallel.
    a. Variable speed pumps only: Alternation, Backup and Cascade
    b. Variable and Fixed speed pumps.

    According to configuration No. 1 and number of pumps select one of the following steps for. In case that there are more than 2 pumps needed and MCO101 has been mounted. If variable and fixed speed is needed, configuration No. 2 needs to be selected.

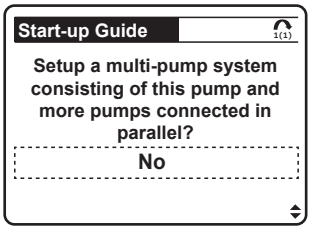

TM077553

Multipump configuration via Modbus RTU

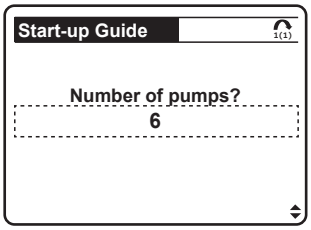

TM077554

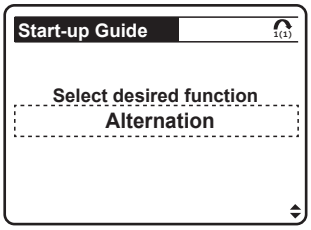

TM077555

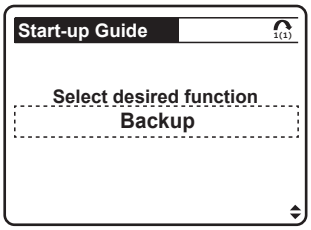

TM077556

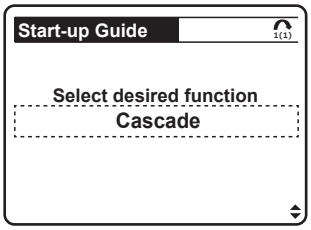

TM077557

16. Enter the setpoint value based on the selected control mode and feedback sensor.

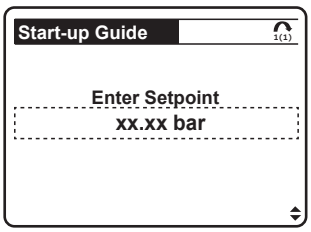

TM077558

Setpoint

17. By pressing **OK**, the unit is ready to run the pump(s).

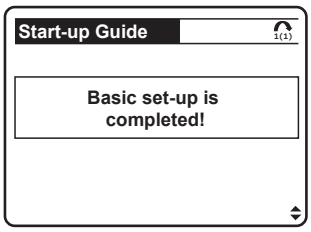

TM077508

Setup completed

9.2 Uploading or downloading data

It is possible to download stored data from one frequency converter and upload it to another.

You cannot cross platforms between CUE 202 (old model) and CUE 203 (new model). CUE 203 is not compatible with the keypad, storing and uploading settings of CUE202.

1. Navigate to **0-5* Copy/Save**, and press **OK**.
2. Press **OK** to activate **0-50 LCP Copy**.
3. Press [Up] to select **[1] All to LCP** to upload data to the operating panel, or select **[2] All from LCP** to download data from the operating panel.
4. Press **OK**. A progress bar shows the uploading or downloading progress.

9.3 Setting an asynchronous motor

To set an asynchronous motor manually in the [Main menu], enter the following motor data available on the motor nameplate:

- **1-20 Motor Power [kW]** or **1-21 Motor Power [HP]**
- **1-22 Motor Voltage**
- **1-23 Motor Frequency**
- **1-24 Motor Current**
- **1-25 Motor Nominal Speed**
- **1-29 Automatic Motor Adaptation (AMA)**.

9.4 Checking the motor rotation direction

There is a risk of damage to the pumps or the compressors if the motor is running in the wrong direction. Before starting the frequency converter, check the motor rotation direction.

1. Navigate to **1-28 Motor Rotation Check**, and press **OK**.
2. Scroll to **[1] Enable**.

The following text appears: **Note! Motor may run in wrong direction.**

1. Press **OK**.
2. Follow the on-screen instructions.

To change the direction of rotation, remove power to the frequency converter and wait before touching the product. See the waiting time in the section for installation requirements.

- Reverse the connection of any two of the three motor cables on the motor or frequency-converter side of the connection.

Related information

6. Electrical connection

9.5 Setting a permanent-magnet motor

To set a permanent-magnet motor manually in the [Main menu], enter the motor data available on the motor nameplate.

1. To activate PM motor operation, set **1-10 Motor Construction** to **[1] PM, non salient SPM.**
2. Set **0-02 Motor Speed Unit** to **[0] RPM**.

Program the following parameters in the listed order:

1. **1-24 Motor Current**
2. **1-26 Motor Cont. Rated Torque**
3. **1-25 Motor Nominal Speed**

4. **1-39 Motor Poles**
5. **1-30 Stator Resistance (Rs)**. Enter the line-to-common stator winding resistance (Rs). If only line-to-line data is available, divide the line-to-line value by two to get the line-to-common (starpoint) value.
6. **1-37 d-axis Inductance (Ld)**. Enter the line-to-common direct-axis inductance of the PM motor. If only line-to-line data is available, divide the line-to-line value by two to get the line-to-common (starpoint) value.
7. **1-40 Back EMF at 1000 RPM**. Enter the line-to-line back EMF of the PM motor at 1000 RPM mechanical speed (RMS value). Back EMF is the voltage generated by a PM motor when no frequency converter is connected and the shaft is turned externally. Back EMF is normally specified for nominal motor speed or for 1000 RPM measured between two lines. If the value is not available for a motor speed of 1000 RPM, calculate the correct value as follows: If back EMF is for example 320 V at 1800 RPM, it can be calculated at 1000 RPM as follows: Back EMF = (Voltage / RPM) × 1000 = (320 / 1800) × 1000 = 178. This is the value that must be programmed for **1-40 Back EMF at 1000 RPM**.

9.5.1 Testing the motor operation

1. Start the motor at low speed (100-200 RPM). If the motor does not turn, make sure that the installation, general programming and motor data are correct.
2. Make sure that the start function in **1-70 PM Start Mode** fits the application requirements.

9.6 Setting a synchronous reluctance motor

To set a synchronous reluctance motor manually in the [Main menu], enter the following motor data available on the motor nameplate:

- **1-10 Motor Construction**
- **1-23 Motor Frequency**
- **1-24 Motor Current**
- **1-25 Motor Nominal Speed**
- **1-26 Motor Cont. Rated Torque**
- **1-29 Automatic Motor Adaptation (AMA)**.

9.7 Setting a permanent-magnet assisted synchronous reluctance motor

To set a permanent-magnet assisted synchronous reluctance motor manually in the [Main menu], enter the motor data available on the motor nameplate.

1. Set **0-02 Motor Speed Unit** to **[0] RPM**, and program the following parameters in the ordered list:
   a. **1-24 Motor Current**
   b. **1-26 Motor Cont. Rated Torque**
   c. **1-25 Motor Nominal Speed**
   d. **1-39 Motor Poles**
   e. **1-30 Stator Resistance (Rs)**. Enter the line-to-common stator winding resistance (Rs). If only line-to-line data is available, divide the line-to-line value by two to get the line-to-common (starpoint) value.
   f. **1-37 d-axis Inductance (Ld)**. Enter the line-to-common direct axis inductance of the PM motor. If only line-to-line data is available, divide the line-to-line value by two to get the line-to-common (starpoint) value.
   g. **1-38 q-axis Inductance (Lq)**. Enter the line-to-common quadrature axis inductance of the PM motor. If only line-to-line data is available, divide the line-to-line value by two to get the line-to-common (starpoint) value.
   h. **1-40 Back EMF at 1000 RPM**. Enter the line-to-line back EMF of the PM motor at 1000 RPM mechanical speed (RMS value). Back EMF is the voltage generated by a PM motor when no frequency converter is connected and the shaft is turned externally. Back EMF is normally specified for nominal motor speed or for 1000 RPM measured between two lines. If the value is not available for a motor speed of 1000 RPM, calculate the correct value as follows: If back EMF is for example 320 V at 1800 RPM, it can be calculated at 1000 RPM as follows: Back EMF = (Voltage / RPM) × 1000 = (320 / 1800) × 1000 = 178. This is the value that must be programmed for **1-40 Back EMF at 1000 RPM**.
   i. **1-29 Automatic Motor Adaptation (AMA)**.

9.8 Automatic Energy Optimisation (AEO)

AEO is not relevant for permanent-magnet motors.

AEO is a procedure which minimises voltage to the motor, thereby reducing energy consumption, heat and noise.

To activate AEO, set **1-03 Torque Characteristics** to **[2] Auto Energy Optim. CT** or **[3] Auto Energy Optim. VT**.

9.9 Testing the local control

1. Press **HAND ON** to provide a local start command to the frequency converter.
2. Accelerate the frequency converter to full speed by pressing [Up]. Moving the cursor left of the decimal point provides quicker input changes.
3. Note any acceleration problems.
4. Press **OFF**. Note any deceleration problems.

9.10 Starting the system

The below steps require wiring and application programming to be completed. We recommend that you follow this procedure after application setup is completed.

1. Press **AUTO ON**.
2. Apply an external run command.
3. Adjust the speed reference throughout the speed range.
4. Remove the external run command.
5. Check the sound and vibration levels of the motor to ensure that the system is working as intended. If warnings or alarms occur, see the overview of warnings and alarms or refer to the service instructions for the frequency converter.

Related information

11.1 Overview of warnings and alarms

9.11 Resetting to default settings

You can make a backup of the changed settings first by uploading them to the operating panel.

9.11.1 Recommended reset

We recommend that you use **14-22 Operation Mode** to perform a reset to default settings. In this way, some settings are kept, such as operating hours, serial communication selections, personal menu settings, fault log, alarm log and other monitoring functions.

1. Navigate to **14-** Special Functions**, and press **OK**.
2. Select **14-22 Operation Mode**, and press **OK**.
3. Use [Up] and [Down] to navigate to **[2] Initialisation**, and press **OK**.
4. Switch off the power to the unit, and wait for the display to switch off.
5. Reconnect the power.
6. Alarm 80, **Drive initialised to default value**, is displayed.
7. Press **RESET** to return to operating mode.

9.11.2 Manual reset

You can also manually reset to default settings, but this method deletes all motor-, programming-, localisation- and monitoring data. It does not reset settings for **15-00 Operating hours**, **15-03 Power Up's**, **15-04 Over Temp's** and **15-05 Over Volt's**.

1. Switch off the power to the unit, and wait for the display to switch off.
2. Press and hold [Status], [Main Menu] and **OK** at the same time while switching on the power to the unit. The fan starts after approximately 5 seconds or when you hear an audible click.

10. Servicing the product

CAUTION
Electric shock
Minor or moderate personal injury

- Before starting any work on the product, make sure that the power supply has been switched off and that it cannot be accidentally switched on.
- Touching the electrical parts may be fatal, even after CUE has been switched off.

Conduct a functional test every 12 months to detect any failure or malfunction of the STO functionality.

To conduct the functional test, perform the following steps:

- Remove the 24 V DC voltage supply at terminal 37.
- Check if the operating panel displays the alarm **Safe Stop A68**.
- Verify that the frequency converter trips the unit.
- Verify that the motor is coasting and comes to a complete stop.
- Verify that the motor cannot be started.
- Reconnect the 24 V DC voltage supply to terminal 37.
- Verify that the motor is not started automatically and restarts only by giving a reset signal (via bus, Digital I/O or the **RESET** button).

Related information

4. Installation requirements

11. Fault finding the product

11.1 Overview of warnings and alarms

Type	LED indicator
Warning	Yellow
Alarm	Flashing red
Trip lock	Yellow and red

Number	Description	Warning	Alarm	Alarm, trip lock
1	10 V low	●	-	-
2	Live zero error	(●)	(●)	-
3	No motor	(●)	-	-
4	Mains phase loss	(●)	(●)	(●)
5	DC voltage high	●	-	-
6	DC voltage low	●	-	-
7	DC overvoltage	●	●	-
8	DC undervoltage	●	●	-
9	Inverter overloaded	●	●	-
10	Motor overtemperature	(●)	(●)	-
11	Motor thermistor overtemperature	(●)	(●)	-
12	Torque limit	●	●	-
13	Overcurrent	●	●	●
14	Protective earth fault	-	●	●
15	Hardware mismatch	-	●	●
16	Short circuit	-	●	●
17	Control word timeout	(●)	(●)	-
18	Start failed	-	●	-
21	Parameter error	●	●	-
23	Internal fan fault	●	-	-
24	External fan fault	●	-	-
25	Brake resistor short-circuit	●	-	-
26	Brake resistor power limit	(●)	(●)	-
27	Brake chopper fault	●	●	-
28	Brake check failed	(●)	(●)	-
29	Heat sink temperature	●	●	●
30	Motor phase U missing	(●)	(●)	(●)
31	Motor phase V missing	(●)	(●)	(●)
32	Motor phase W missing	(●)	(●)	(●)
33	Inrush fault	-	●	●
34	Fieldbus communication fault	●	●	-
35	Option fault	(●)	-	-
36	Mains failure	●	●	-
38	Internal fault	-	●	●
39	Heat sink sensor	-	●	●
40	Overload of digital output, terminal 27	(●)	-	-
41	Overload of digital output, terminal 29	(●)	-	-
42	Overload X30/6 or X30/7	(●)	-	-
45	Protective earth fault 2	●	●	●
46	Power card supply	-	●	●
47	24 V supply low	●	●	●
48	1.8 V supply low	-	●	●
49	Speed limit	●	-	-

Number	Description	Warning	Alarm	Alarm, trip lock
50	AMA calibration failed	-	●	-
51	AMA check U_{nom} and I_{nom}	-	●	-
52	AMA low I_{nom}	-	●	-
53	AMA motor too large	-	●	-
54	AMA motor too small	-	●	-
55	AMA parameter out of range	-	●	-
56	AMA interrupted by user	-	●	-
57	AMA timeout	-	●	-
58	AMA internal fault	●	●	-
59	Current limit	●	-	-
60	External interlock	●	●	-
61	Feedback error	(●)	(●)	-
62	Output frequency at maximum limit	●	-	-
64	Voltage limit	●	-	-
65	Control card overtemperature	●	●	●
66	Heat sink temperature low	●	-	-
67	Option configuration has changed	-	●	-
68	Safe stop activated	(●)	(●)[1]	-
69	Power card temperature	-	●	●
70	Illegal FC configuration	-	-	●
71	PTC 1 safe stop	●	●	-
72	Dangerous failure	●	●	●
76	Power unit setup	●	-	-
77	Reduced power mode	●	-	-
79	Illegal power section configuration	-	●	-
80	Drive initialised to default value	-	●	-
81	CSIV corrupt	-	●	-
82	CSIV parameter error	-	●	-
90	Feedback monitor	(●)	(●)	-
91	Analog input 54 wrong settings	-	-	●
92	No flow	(●)	(●)	-
93	Dry pump	(●)	(●)	-
94	End of curve	(●)	(●)	-
96	Start delayed	(●)	-	-
97	Stop delayed	(●)	-	-
98	Clock fault	●	-	-
99	Locked rotor	-	●	-
100	Derag limit fault	-	●	(●)
104	Mixing fan fault	(●)	(●)	-
148	System temperature	●	●	-
200	Fire mode	(●)	-	-
201	Fire mode was active	(●)	-	-
243	Brake IGBT	●	●	-
244	Heat sink temperature	●	●	●
245	Heat sink sensor	-	●	●
246	Power card supply	-	●	●
247	Power card temperature	-	●	●
248	Illegal power section configuration	-	●	●
249	Temperature of the rectifier heat sink	●	-	-
250	New spare part	-	-	●
251	New type code	-	●	●
274	The flow is not confirmed	-	●	-
275	Flow switch failure	-	●	-

Number	Description	Warning	Alarm	Alarm, trip lock
2004	External fault	-	●	-
2007	Too high bearing temperature	●	●	
2008	Too high bearing temperature	●	●	-
2010	Setpoint signal is outside range	-	●	-
2011	Sensor 1 is outside range	-	●	-
2012	Sensor 2 is outside range	-	●	-
2013	Temperature sensor 1 is outside range	-	●	-
2014	Temperature sensor 2 is outside range	-	●	-
2016	Limit 1 is exceeded	●	●	-
2017	Limit 2 is exceeded	●	●	-

[1] This warning or alarm cannot be auto reset via parameter selection.

Related information

9.10 Starting the system

12. Technical data

12.1 Enclosure

The individual CUE cabinet sizes are characterised by their enclosures. The table shows the relationship of enclosure class and enclosure type. The enclosure can be identified on the basis of typical shaft power, voltage and IP class.

Example:

Read from the nameplate:

- Supply voltage = 3 × 380-500 V.
- Typical shaft power = 1.5 kW (2 hp).
- Enclosure class = IP20.

The table shows that the CUE enclosure is A2.

Typical shaft power P2		Enclosure										
		1 x 200-240 V			3 x 200-240 V		3 x 380-500 V		3 x 525-600 V		3 x 525-690 V	
[kW]	[hp]	IP20	IP21	IP55	IP20	IP55	IP20	IP55	IP20	IP55	IP21	IP55
0.55	0.75											
0.75	1											
1.1	1.5	A3		A5	A2	A4	A2	A4	A3	A5		
1.5	2											
2.2	3		B1	B1								
3	4				A3	A5			A2/A3			
3.7	5											
4	5						A2	A4				
5.5	7.5		B1	B1			A3	A5	A3	A5		
7.5	10		B2	B2	B3	B1						
11	15											
15	20				B4	B2	B3	B1	B3	B1		
18.5	25										B2	B2
22	30				C3	C1						
30	40						B4	B2	B4	B2		
37	50				C4	C2						
45	60						C3	C1	C3	C1		
55	75										C2	C2
75	100						C4	C2	C4	C2		
90	125											

Related information

5. Mechanical installation

12.2 Operating conditions

Relative humidity	5-95 %
Ambient temperature	Max. 50 °C (122 °F)
Average ambient temperature over a period of 24 hours	Max. 45 °C (113 °F)
Minimum ambient temperature at full operation	0 °C (32 °F)
Minimum ambient temperature at reduced operation	-10 °C (14 °F)
Temperature during storage and transport	-25 to +65 °C (-13 to +149 °F)
Storage duration	Max. 6 months
Maximum altitude above sea level without performance reduction	1000 m (3280 ft)
Maximum altitude above sea level with performance reduction	3000 m (9840 ft)

! CUE comes in packaging that is not suitable for outdoor storage.

12.3 Mechanical data

12.3.1 Cable glands

Select standard gland holes for CUE frequency converters used outside USA and Canada.

Select imperial gland holes for CUE frequency converters used in USA and Canada.

Enclosure	Standard gland holes	Imperial gland holes
A3 IP20/21 / NEMA type 1	3 x 22.5 (1/2")	3 x 22.5 (1/2")
	3 x 28.4 (3/4")	3 x 28.4 (3/4")
A4 IP55 / NEMA type 12	1 x 22.5 (1/2")	1 x 22.5 (1/2")
	3 x 28.4 (3/4")	3 x 28.4 (3/4")
A5 IP55 / NEMA type 12	6 x 26.3	6 x 28.4 (3/4")
B1 IP21 / NEMA type 1	2 x 22.5 (1/2")	2 x 22.5 (1/2")
	3 x 37.2	3 x 34.7 (1")
B1 IP55 / NEMA type 12	2 x 21.5	2 x 22.5 (1/2")
	1 x 26.3	1 x 28.4 (3/4")
	3 x 33.1	3 x 34.7 (1")
B2 IP21 / NEMA type 1 and B2 IP55 / NEMA type 12	1 x 21.5	1 x 22.5 (1/2")
	1 x 26.3	1 x 28.4 (3/4")
	1 x 33.1	1 x 34.7 (1")
	2 x 42.9	2 x 44.2 (1 1/4")

12.3.2 Cable requirements

Maximum length, screened motor cable	150 m (500 ft)
Maximum length, unscreened motor cable	300 m (1000 ft)
Maximum length, signal cable	300 m (1000 ft)

Always comply with local regulations on cable cross-sections.

12.3.3 Cable cross-sections to signal terminals

Maximum cable cross-section to signal terminals, rigid conductor	1.5 mm^2 (14 AWG)
Maximum cable cross-section to signal terminals, flexible conductor	1.0 mm^2 (18 AWG)
Minimum cable cross-section to signal terminals	0.5 mm^2 (20 AWG)

Related information

6.1.2 Protection against short circuit, fuses

12.3.4 Non-UL fuses and conductor cross-sections to mains and motor, for installations outside North America

Typical shaft power P2	Maximum fuse size	Fuse type	Maximum conductor cross-section [1]
[kW (hp)]	[A]		[mm^2]
1 x 200-240 V			
1.1 (1.5)	20	gG	4
1.5 (2)	30	gG	10
2.2 (3)	40	gG	10
3 (4)	40	gG	10
3.7 (5)	60	gG	10
5.5 (7.5)	80	gG	10
7.5 (10)	100	gG	35
3 x 200-240 V			
0.75 (1)	10	gG	4
1.1 (1.5)	20	gG	4
1.5 (2)	20	gG	4
2.2 (3)	20	gG	4
3 (4)	32	gG	4
3.7 (5)	32	gG	4
5.5 (7.5)	63	gG	10
7.5 (10)	63	gG	10
11 (15)	63	gG	10
15 (20)	80	gG	35
18.5 (25)	125	gG	50
22 (30)	125	gG	50
30 (40)	160	gG	50
37 (50)	200	aR	95
45 (60)	250	aR	120
3 x 380-500 V			
0.55 (0.75)	10	gG	4
0.75 (1)	10	gG	4
1.1 (1.5)	10	gG	4
1.5 (2)	10	gG	4
2.2 (3)	20	gG	4
3 (4)	20	gG	4
4 (5)	20	gG	4
5.5 (7.5)	32	gG	4
7.5 (10)	32	gG	4
11 (15)	63	gG	10
15 (20)	63	gG	10
18.5 (25)	63	gG	10
22 (30)	63	gG	35
30 (40)	80	gG	35
37 (50)	100	gG	50
45 (60)	125	gG	50
55 (75)	160	gG	50
75 (100)	250	aR	95
90 (125)	250	aR	120
110 (150)	300	gG	2 × 70
132 (200)	350	gG	2 × 70
160 (250)	400	gG	2 × 185
200 (300)	500	gG	2 × 185
250 (350)	600	aR	2 × 185
3 x 525-600 V			
0.75 (1)	10	gG	4
1.1 (1.5)	10	gG	4
1.5 (2)	10	gG	4
2.2 (3)	20	gG	4
3 (4)	20	gG	4
4 (5)	20	gG	4
5.5 (7.5)	32	gG	4
7.5 (10)	32	gG	4
11 (15)	40	gG	10
15 (20)	40	gG	10
18.5 (25)	50	gG	10
22 (30)	60	gG	35
30 (40)	80	gG	35
37 (50)	100	gG	35
45 (60)	150	gG	50
55 (75)	160	gG	50
75 (100)	225	aR	150
90 (125)	250	aR	150
3 x 525-690 V			
11 (15)	63	gG	35
15 (20)	63	gG	35
18.5 (25)	63	gG	35
22 (30)	63	gG	35
30 (40)	63	gG	35
37 (50)	80	gG	95
45 (60)	100	gG	95
55 (75)	125	gG	95
75 (100)	160	gG	95
90 (125)	160	gG	95
110 (150)	225	-	2 × 70

Typical shaft power P2	Maximum fuse size	Fuse type	Maximum conductor cross-section [1]
132 (200)	250	-	2 × 70
160 (250)	350	-	2 × 70
200 (300)	400	-	2 × 185
250 (350)	500	-	2 × 185

1 Screened motor cable, unscreened supply cable.

Related information

4.4.2 Reduction in connection with long motor cables

12.3.5 UL fuses and conductor cross-sections to mains and motor, for installations in North America

12.3.5 UL fuses and conductor cross-sections to mains and motor, for installations in North America

Typical shaft power P2	Fuse type							Maximum conductor cross-section[1]
	Bussmann			SIBA	Littel Fuse	Ferraz-Shawmut		
[kW (hp)]	RK1/E1958/ JFHR2	J/E4273 T/ JDDZ	T/E4274 H/ JDDZ	RK1/ Bussmann E125085 JFHR2	RK1/SIBA E180276 RKI/ JDDZ	CC/Littel Fuse E71611 JFHR2	RK1/E60314 JFHR2	[AWG][2]
1 x 200-240 V								
1.1 (1.5)	KTN-R20	-	-	-	-	-	-	10
1.5 (2)	KTN-R30	-	-	-	-	-	-	7
2.2 (3)	KTN-R40	-	-	-	-	-	-	7
3 (4)	KTN-R40	-	-	-	-	-	-	7
3.7 (5)	KTN-R60	-	-	-	-	-	-	7
5.5 (7.5)	-	-	-	-	-	-	-	7
7.5 (10)	-	-	-	-	-	-	-	2
3 x 200-240 V								
0.75 (1)	KTN-R10	JKS-10	JJN-10	5017906-010	KTN-R10	ATM-R10	A2K-10R	10
1.1 (1.5)	KTN-R20	JKS-20	JJN-20	5017906-020	KTN-R20	ATM-R20	A2K-20R	10
1.5 (2)	KTN-R20	JKS-20	JJN-20	5017906-020	KTN-R20	ATM-R20	A2K-20R	10
2.2 (3)	KTN-R20	JKS-20	JJN-20	5017906-020	KTN-R20	ATM-R20	A2K-20R	10
3 (4)	KTN-R30	JKS-30	JJN-30	5012406-032	KTN-R30	ATM-R30	A2K-30R	10
3.7 (5)	KTN-R30	JKS-30	JJN-30	5012406-032	KTN-R30	ATM-R30	A2K-30R	10
5.5 (7.5)	KTN-R50	JKS-50	JJN-50	5012406-050	KLN-R50	-	A2K-50R	7
7.5 (10)	KTN-R50	JKS-60	JJN-60	5012406-050	KLN-R60	-	A2K-50R	7
11 (15)	KTN-R60	JKS-60	JJN-60	5014006-063	KLN-R60	A2K-60R	A2K-60R	7
15 (20)	KTN-R80	JKS-80	JJN-80	5014006-080	KLN-R80	A2K-80R	A2K-80R	2
18.5 (25)	KTN-R125	JKS-150	JJN-125	2028220-125	KLN-R125	A2K-125R	A2K-125R	1/0
22 (30)	KTN-R125	JKS-150	JJN-125	2028220-125	KLN-R125	A2K-125R	A2K-125R	1/0
30 (40)	FWX-150	-	-	2028220-150	L25S-150	A25X-150	A25X-150	1/0
37 (50)	FWX-200	-	-	2028220-200	L25S-200	A25X-200	A25X-200	4/0
45 (60)	FWX-250	-	-	2028220-250	L25S-250	A25X-250	A25X-250	250 MCM
3 x 380-500 V								
0.55 (0.75)	KTS-R10	JKS-10	JJS-10	5017906-010	KTN-R10	ATM-R10	A2K-10R	10
0.75 (1)	KTS-R10	JKS-10	JJS-10	5017906-010	KTN-R10	ATM-R10	A2K-10R	10
1.1 (1.5)	KTS-R10	JKS-10	JJS-10	5017906-010	KTN-R10	ATM-R10	A2K-10R	10
1.5 (2)	KTS-R10	JKS-10	JJS-10	5017906-010	KTN-R10	ATM-R10	A2K-10R	10
2.2 (3)	KTS-R20	JKS-20	JJS-20	5017906-020	KTN-R20	ATM-R20	A2K-20R	10
3 (4)	KTS-R20	JKS-20	JJS-20	5017906-020	KTN-R20	ATM-R20	A2K-20R	10
4 (5)	KTS-R20	JKS-20	JJS-20	5017906-020	KTN-R20	ATM-R20	A2K-20R	10
5.5 (7.5)	KTS-R30	JKS-30	JJS-30	5012406-032	KTN-R30	ATM-R30	A2K-30R	10
7.5 (10)	KTS-R30	JKS-30	JJS-30	5012406-032	KTN-R30	ATM-R30	A2K-30R	10
11 (15)	KTS-R40	JKS-40	JJS-40	5014006-040	KLS-R40	-	A6K-40R	7
15 (20)	KTS-R40	JKS-40	JJS-40	5014006-040	KLS-R40	-	A6K-40R	7
18.5 (25)	KTS-R50	JKS-50	JJS-50	5014006-050	KLS-R50	-	A6K-50R	7
22 (30)	KTS-R60	JKS-60	JJS-60	5014006-063	KLS-R60	-	A6K-60R	2
30 (40)	KTS-R80	JKS-80	JJS-80	2028220-100	KLS-R80	-	A6K-80R	2
37 (50)	KTS-R100	JKS-100	JJS-100	2028220-125	KLS-R100	-	A6K-100R	1/0
45 (60)	KTS-R125	JKS-150	JJS-150	2028220-125	KLS-R125	-	A6K-125R	1/0
55 (75)	KTS-R150	JKS-150	JJS-150	2028220-160	KLS-R150	-	A6K-150R	1/0
75 (100)	FWH-220	-	-	2028220-200	L50S-225	-	A50-P225	4/0
90 (125)	FWH-250	-	-	2028220-250	L50S-250	-	A50-P250	250 MCM
110 (150)	FWH-300	JJS-300	NOS-300	170M3017	2028220-38	L50S-300	A50-P300	2 x 2/0

Typical shaft power P2	Fuse type							Maximum conductor cross-section [1]
	Bussmann			SIBA	Littel Fuse	Ferraz-Shawmut		
[kW (hp)]	RK1/E1958/ JFHR2	J/E4273 T/ JDDZ	T/E4274 H/ JDDZ	RK1/ Bussmann E125085 JFHR2	RK1/SIBA E180276 RKI/ JDDZ	CC/Littel Fuse E71611 JFHR2	RK1/E60314 JFHR2	[AWG] [2]
132 (200)	FWH-350	JJS-350	NOS-350	170M3018	2028220-38	L50S-350	A50-P350	2 x 2/0
160 (250)	FWH-400	JJS-400	NOS-400	170M4012	206xx32-400	L50S-400	A50-P400	2 x 350 MCM
200 (300)	FWH-500	JJS-500	NOS-500	170M4014	206xx32-500	L50S-500	A50-P500	2 x 350 MCM
250 (350)	FWH-600	JJS-600	NOS-600	170M4016	206xx32-600	L50S-600	A50-P600	2 x 350 MCM
-	-	-	-	Bussmann E125085 JFHR2	SIBA E180276 JFHR2	-	Ferraz-Shawmut E76491 JFHR2	-
3 x 525-600 V								
0.75 (1)	KTS-R-5	JKS-5	JJS-6	5017906-005	KLS-R-005	-	A6K-5-R	12
1.1 (1.5)	KTS-R-10	JKS-5	JJS-6	5017906-005	KLS-R-005	-	A2K-5-R	12
1.5 (2)	KTS-R-10	JKS-10	JJS-10	5017906-010	KLS-R-010	-	A2K-10-R	12
2.2 (3)	KTS-R-10	JKS-10	JJS-10	5017906-010	KLS-R-010	-	A2K-10-R	12
3 (4)	KTS-R-15	JKS-15	JJS-15	5017906-016	KLS-R-020	-	A2K-15-R	12
4 (5)	KTS-R-20	JKS-20	JJS-20	5017906-020	KLS-R-020	-	A2K-20-R	12
5.5 (7.5)	KTS-R-25	JKS-25	JJS-25	5017906-025	KLS-R-030	-	A2K-25-R	12
7.5 (10)	KTS-R-30	JKS-30	JJS-30	5017906-030	KLS-R-030	-	A2K-30-R	12
11 (15)	KTS-R-35	JKS-35	JJS-35	5014006-040	KLS-R-035	-	A6K-35-R	8
15 (20)	KTS-R-35	JKS-35	JJS-35	5014006-040	KLS-R-035	-	A6K-35-R	8
18.5 (25)	KTS-R-45	JKS-45	JJS-45	5014006-050	KLS-R-045	-	A6K-45-R	8
22 (30)	KTS-R-50	JKS-50	JJS-50	5014006-050	KLS-R-050	-	A6K-50-R	2
30 (40)	KTS-R-60	JKS-60	JJS-60	5014006-063	KLS-R-060	-	A6K-60-R	2
37 (50)	KTS-R-80	JKS-80	JJS-80	5014006-080	KLS-R-075	-	A6K-80-R	2
45 (60)	KTS-R-100	JKS-100	JJS-100	5014006-100	KLS-R-100	-	A6K-100-R	1
55 (75)	KTS-R-125	JKS-125	JJS-125	2028220-125	KLS-R-125	-	A6K-125-R	1
75 (100)	KTS-R150	JKS-150	JJS-150	2028220-150	KLS-R-150	-	A6K-150-R	300 MCM
90 (125)	KTS-R175	JKS-175	JJS-175	2028220-200	KLS-R-175	-	A6K-175-R	300 MCM
3 x 525-690 V								
11 (15)	KTS-R-25	JKS-25	JJS-25	5017906-025	KLS-R-025	HST25	A6K-25R	1/0
15 (20)	KTS-R-30	JKS-30	JJS-30	5017906-030	KLS-R-030	HST30	A6K-30R	1/0
18.5 (25)	KTS-R-45	JKS-45	JJS-45	5014006-050	KLS-R-045	HST45	A6K-45R	1/0
22 (30)	KTS-R-45	JKS-45	JJS-45	5014006-050	KLS-R-045	HST45	A6K-45R	1/0
30 (40)	KTS-R-60	JKS-60	JJS-60	5014006-063	KLS-R-060	HST60	A6K-60R	1/0
37 (50)	KTS-R-80	JKS-80	JJS-80	5014006-080	KLS-R-075	HST80	A6K-80R	1/0
45 (60)	KTS-R-90	JKS-90	JJS-90	5014006-100	KLS-R-090	HST90	A6K-90R	1/0
55 (75)	KTS-R-100	JKS-100	JJS-100	5014006-100	KLS-R-100	HST100	A6K-100R	1/0
75 (100)	KTS-R-125	JKS-125	JJS-125	2028220-125	KLS-R-125	HST125	A6K-125R	1/0
90 (125)	KTS-R-150	JKS-150	JJS-150	2028220-150	KLS-R-150	HST150	A6K-150R	1/0
110 (150)	-	-	-	170M3017	2061032.38	-	6.6URD30D08 A038	2 x 2/0
132 (200)	-	-	-	170M3018	2061032.350	-	6.6URD30D08 A0350	2 x 2/0
160 (250)	-	-	-	170M4011	2061032.350	-	6.6URD30D08 A0350	2 x 2/0
200 (300)	-	-	-	170M4012	2061032.350	-	6.6URD30D08 A0400	2 x 350 MCM
250 (350)	-	-	-	170M4014	2061032.500	-	6.6URD30D08 A0500	2 x 350 MCM

1 Screened motor cable, unscreened supply cable.

2 American Wire Gauge.

Related information

4.4.2 Reduction in connection with long motor cables

12.3.4 Non-UL fuses and conductor cross-sections to mains and motor, for installations outside North America

12.4 Electrical data

Mains supply (L1, L2, L3)

Supply voltage	200-240 V ± 10 %
Supply voltage	380-500 V ± 10 %
Supply voltage	525-600 V ± 10 %
Supply voltage	525-690 V ± 10 %
Supply frequency	50/60 Hz
Maximum temporary imbalance between phases	3 % of rated value
Leakage current to protective earth	> 3.5 mA
Number of cut-ins, enclosure A	Max. 2 times/min
Number of cut-ins, enclosures B and C	Max. 1 time/min

Do not use the power supply for switching CUE on and off.

Motor output (U, V, W)

Output voltage	0-100 % [1]
Output frequency	0-590 Hz [2]
Switching on output	Not recommended

1 Output voltage in percentage of supply voltage.

2 Depending on the pump family selected.

RS-485 GENIbus connection

Terminal number	68 (A), 69 (B), 61 GND (Y)

The RS-485 circuit is functionally separated from other central circuits and galvanically separated from the supply voltage (PELV).

Digital inputs

Terminal number	18, 19, 32, 33
Voltage level	0-24 VDC
Voltage level, open contact	> 19 VDC
Voltage level, closed contact	< 14 VDC
Maximum voltage on input	28 VDC
Input resistance, R_i	Approx. 4 kΩ

All digital inputs are galvanically separated from the supply voltage (PELV) and other high-voltage terminals.

Signal relays

Relay 01, terminal number	1 (C), 2 (NO), 3 (NC)
Relay 02, terminal number	4 (C), 5 (NO), 6 (NC)
Maximum terminal load (AC-1) [1]	240 VAC, 2 A
Maximum terminal load (AC-15) [1]	240 VAC, 0.2 A
Maximum terminal load (DC-1) [1]	50 VDC, 1 A
Minimum terminal load	24 VDC, 10 mA 24 VAC, 20 mA

1 IEC 60947, parts 4 and 5.

C	Common
NO	Normally open
NC	Normally closed

The relay contacts are galvanically separated from other circuits by reinforced insulation (PELV).

Analog inputs

Analog input 1, terminal number	53
Voltage signal Voltage range Input resistance, R_i Maximum voltage	A53 = "U" [1] 0-10 V Approx. 10 kΩ ± 20 V
Current signal Current range Input resistance, R_i Maximum current	A53 = "I" 0-20, 4-20 mA Approx. 200 Ω 30 mA
Maximum fault	0.5 % of full scale

1 The factory setting is voltage signal "U".

Analog input 2, terminal number	54
Current signal	A54 = "I" [1]
Current range	0-20, 4-20 mA
Input resistance, R_i	Approx. 200 Ω
Maximum current	30 mA
Maximum fault	0.5 % of full scale

All analog inputs are galvanically separated from the supply voltage (PELV) and other high-voltage terminals.

Analog output

Analog output 1, terminal number	42
Current range	0-20 mA
Maximum load to frame	500 Ω
Maximum fault	0.8 % of full scale

The analog output is galvanically separated from the supply voltage (PELV) and other high-voltage terminals.

MCB 114 sensor input module

Analog input 3, terminal number	2
Current range	0/4-20 mA
Input resistance	< 200 Ω
Analog inputs 4 and 5, terminal number	4, 5 and 7, 8
Signal type, 2- or 3-wire	Pt100/Pt1000

Related information

6.1.3 Additional protection

12.5 Drive efficiency (CDM)

The IE classification for the complete drive module (CDM) is based on drive losses. The loss determination is based on factory settings such as the default switching frequency. The efficiency of CUE is determined as efficiency class IE2 according to EN 50598-2 and IEC 61800-9.

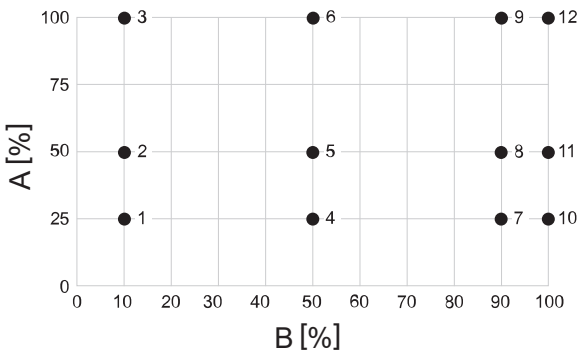

TM079993

Different operating points of CUE depending on the relative torque-producing current and the relative motor stator frequency

Pos.	Description
A	Relative torque-producing current
B	Relative motor stator frequency

Efficiencies and standby losses of CUE at different operating points

CUE drives with STO and/or DC suffixes in their description in Grundfos Product Center have the same efficiencies as the CUE drives with equivalent power sizes listed below.

Drive efficiencies for CUE 3 × 380-500 V, IP20/IP21 variants

Variant	Nominal power [kVA]	Nominal current [A]	Standby loss [W]	Frequency [%]											
				10	10	10	50	50	50	90	90	90	100	100	100
				Current [%]											
				25	50	100	25	50	100	25	50	100	25	50	100
				Operating point											
				1	2	3	4	5	6	7	8	9	10	11	12
				Efficiency [%]											
IP20 0.55 kW	1.3	1.8	12	78.2	83.4	84.4	93.5	95.5	95.9	95.6	98.9	97.2	95.8	97.2	97.4
IP20 0.75 kW	1.7	2.4	12	78.9	84.8	85.4	94.0	95.8	96.0	96.0	97.0	97.3	96.3	97.2	97.5
IP20 1.1 kW	2.1	3	12	78.1	84.8	85.6	93.9	95.7	96.1	96.1	97.1	97.3	96.4	97.2	97.6
IP20 1.5 kW	2.8	4.1	12	78.4	85.0	86.0	93.9	95.8	96.2	96.0	97.1	97.4	96.3	97.2	97.7
IP20 2.2 kW	3.9	5.6	12	60.1	71.9	77.8	87.4	92.1	94.0	92.0	95.8	96.7	92.6	96.2	97.0
IP20 3.0 kW	5	7.2	12	61.8	73.2	78.5	88.2	92.5	94.2	92.5	95.9	96.8	93.1	96.4	97.1
IP20 4.0 kW	6.9	10	12	65.0	75.6	79.6	89.5	93.2	94.6	93.4	96.3	96.9	94.0	96.8	97.2
IP20 5.5 kW	9	13	12	68.8	78.0	81.8	91.1	94.0	95.3	94.5	96.7	97.3	94.9	97.2	97.5
IP20 7.5 kW	11	16	12	71.2	79.7	82.5	92.0	94.4	95.5	95.1	97.0	97.4	95.5	97.3	97.6
IP20 11 kW	16.6	24	18	73.6	81.1	83.1	92.8	94.9	95.7	95.5	97.2	97.5	95.9	97.5	97.7
IP20 15 kW	22.2	32	18	76.2	82.7	84.2	93.5	95.4	95.9	96.0	97.4	97.6	96.3	97.7	97.8
IP20 18.5 kW	26	37.5	18	78.1	83.8	84.9	94.1	95.7	96.1	96.3	97.5	97.6	96.5	97.7	97.8
IP20 22 kW	30.5	44	22	80.3	85.1	85.5	94.7	96.1	96.3	96.6	97.6	97.7	96.8	97.9	97.9
IP20 30 kW	42.3	61	22	81.2	85.4	85.3	94.8	96.0	96.1	96.6	97.5	97.5	96.9	97.8	97.8
IP20 37 kW	50.6	73	22	81.8	85.6	85.2	94.9	96.0	96.0	96.7	97.5	97.4	96.9	97.7	97.6
IP20 45 kW	62.4	90	25	83.1	86.1	85.1	95.2	96.1	96.0	96.8	97.5	97.2	97.0	97.7	97.5
IP20 55 kW	73.4	106	25	83.6	86.4	85.8	95.4	96.2	96.1	96.9	97.5	97.3	97.1	97.8	97.6
IP20 75 kW	102	147	29	85.0	87.2	87.7	95.9	96.6	96.4	97.2	97.7	97.7	97.4	97.9	97.8
IP20 90 kW	123	177	29	86.6	88.3	88.2	96.1	96.7	96.5	97.2	97.7	97.6	97.4	97.9	97.7
IP21 110 kW	147	212	37	88.3	89.5	88.7	96.3	96.8	96.5	97.2	97.8	97.6	97.4	97.9	97.6

Variant	Nominal power [kVA]	Nominal current [A]	Standby loss [W]	Frequency [%]											
				10	10	10	50	50	50	90	90	90	100	100	100
				Current [%]											
				25	50	100	25	50	100	25	50	100	25	50	100
				Operating point											
				1	2	3	4	5	6	7	8	9	10	11	12
				Efficiency [%]											
IP21 132 kW	180	260	37	88.0	89.5	88.6	96.3	96.8	96.5	97.3	97.8	97.7	97.4	98.0	97.7
IP21 160 kW	218	315	37	84.7	86.7	83.4	95.3	96.1	95.7	96.6	97.5	97.3	96.8	97.8	97.6
IP21 200 kW	274	395	37	83.3	86.4	84.2	95.1	96.2	96.0	96.7	97.6	97.5	96.9	97.8	97.7
IP21 250 kW	333	480	37	82.3	86.0	84.9	95.2	96.3	96.2	96.8	97.7	97.7	97.0	97.9	97.9
IP21 315 kW	407	588	37	82.3	86.0	84.9	95.2	96.3	96.2	96.8	97.7	97.7	97.0	97.9	97.9

Drive efficiencies for CUE 3 × 380-500 V, IP55/IP54 variants

Variant	Nominal power [kVA]	Nominal current [A]	Standby loss [W]	Frequency [%]											
				10	10	10	50	50	50	90	90	90	100	100	100
				Current [%]											
				25	50	100	25	50	100	25	50	100	25	50	100
				Operating point											
				1	2	3	4	5	6	7	8	9	10	11	12
				Efficiency [%]											
IP55 0.55 kW	1.3	1.8	14	78.2	83.4	83.0	93.5	95.5	95.5	95.6	96.9	97.0	95.8	97.0	97.3
IP55 0.75 kW	1.7	2.4	14	77.3	83.8	84.3	93.5	95.5	95.7	95.7	96.9	97.1	96.0	97.1	97.4
IP55 1.1 kW	2.1	3	14	78.1	84.0	84.7	93.9	95.5	95.8	96.1	97.0	97.2	96.4	97.2	97.5
IP55 1.5 kW	2.8	4.1	14	78.4	84.4	85.3	93.9	95.7	96.0	96.0	97.0	97.3	96.3	97.2	97.6
IP55 2.2 kW	3.9	5.6	14	59.7	71.9	77.4	87.4	92.0	93.9	92.1	95.7	96.6	92.8	96.2	96.9
IP55 3.0 kW	5	7.2	14	61.5	73.2	78.2	88.2	92.4	94.1	92.6	95.9	96.7	93.2	96.4	97.0
IP55 4.0 kW	6.9	10	14	65.0	75.4	79.3	89.5	93.2	94.5	93.4	96.3	96.9	94.0	96.7	97.1
IP55 5.5 kW	9	13	14	68.8	78.0	81.6	91.1	94.0	95.2	94.5	96.7	97.3	94.9	97.1	97.5
IP55 7.5 kW	11	16	14	71.2	79.6	82.4	92.0	94.4	95.4	95.1	97.0	97.4	95.5	97.3	97.6
IP55 11 kW	16.6	24	24	73.5	80.8	82.6	92.8	94.8	95.5	95.5	97.1	97.4	95.9	97.5	97.7
IP55 15 kW	22.2	32	24	76.2	82.5	83.7	93.5	95.3	95.8	95.9	97.3	97.5	96.2	97.6	97.7
IP55 18.5 kW	26	37.5	24	78.0	83.6	84.5	94.0	95.6	96.0	96.2	97.4	97.6	96.5	97.7	97.8
IP55 22 kW	30.5	44	27	80.3	85.0	85.2	94.7	96.0	96.2	96.6	97.6	97.6	96.8	97.8	97.9
IP55 30 kW	42.3	61	27	81.1	85.3	85.1	94.8	96.0	96.1	96.6	97.5	97.5	96.9	97.8	97.7
IP55 37 kW	50.6	73	30	81.8	85.5	84.9	94.9	96.0	96.0	96.6	97.5	97.3	96.9	97.7	97.6
IP55 45 kW	62.4	90	30	83.0	86.0	84.9	95.2	96.0	95.9	96.8	97.4	97.2	97.0	97.7	97.5
IP55 55 kW	73.4	106	30	83.6	86.3	85.6	95.4	96.2	96.0	96.9	97.5	97.3	97.1	97.8	97.5
IP55 75 kW	102	147	41	85.0	87.1	87.5	95.8	96.6	96.4	97.2	97.7	97.6	97.4	97.9	97.7
IP55 90 kW	123	177	41	86.6	88.2	88.0	96.0	96.7	96.4	97.2	97.7	97.6	97.4	97.9	97.7
IP54 110 kW	147	212	37	88.3	89.5	88.7	96.3	96.8	96.5	97.2	97.8	97.6	97.4	97.9	97.6
IP54 132 kW	180	260	37	88.0	89.5	88.6	96.3	96.8	96.5	97.3	97.8	97.7	97.4	98.0	97.7
IP54 160 kW	218	315	37	84.7	86.7	83.4	95.3	96.1	95.7	96.6	97.5	97.3	96.8	97.8	97.6
IP54 200 kW	274	395	37	83.3	86.4	84.2	95.1	96.2	96.0	96.7	97.6	97.5	96.9	97.8	97.7
IP54 250 kW	333	480	37	82.3	86.0	84.9	95.2	96.3	96.2	96.8	97.7	97.7	97.0	97.9	97.9
IP54 315 kW	407	588	37	80.7	85.3	85.6	95.1	96.3	96.5	97.0	97.8	97.8	97.3	97.9	98.0

Drive efficiencies for CUE 3 × 525-690 V, IP21/IP55/IP54 variants

Variant	Nominal power [kVA]	Nominal current [A]	Standby loss [W]	Frequency [%]											
				10	10	10	50	50	50	90	90	90	100	100	100
				Current [%]											
				25	50	100	25	50	100	25	50	100	25	50	100
				Operating point											
				1	2	3	4	5	6	7	8	9	10	11	12
				Efficiency [%]											
IP__ 11 kW*	15.5	13	22	64.4	74.2	80.7	87.6	91.7	94.0	91.2	95.1	96.5	91.7	95.6	96.8
IP__ 15 kW*	21.5	18	22	69.9	78.0	82.9	90.0	93.1	94.7	93.0	95.9	96.9	93.4	96.3	97.1
IP__ 18.5 kW*	26.3	22	22	73.0	79.8	84.0	91.2	93.7	95.1	93.8	96.3	97.0	84.2	96.7	97.3
IP__ 22 kW*	32.3	27	22	75.6	81.4	84.9	92.3	94.3	95.4	94.6	96.6	97.2	94.9	96.9	97.5
IP__ 30 kW*	40.6	34	22	76.9	82.7	86.1	92.6	94.7	95.7	94.8	96.9	97.4	95.1	97.1	97.6
IP__ 37 kW*	49	41	22	79.0	83.9	86.6	93.4	95.0	95.9	95.4	97.1	97.5	95.6	97.3	97.7
IP__ 45 kW*	62.1	52	25	87.7	90.3	91.0	96.9	97.5	97.6	98.0	98.5	98.5	98.2	98.6	98.6
IP__ 55 kW*	74.1	62	25	88.8	90.8	91.0	97.2	97.6	97.6	98.2	98.5	98.4	98.3	98.6	98.5
IP__ 75 kW*	99.2	83	37	87.6	90.0	90.6	96.9	97.5	97.6	98.1	98.5	98.4	98.2	98.6	98.5
IP__ 90 kW*	119.5	100	37	86.4	88.7	88.9	96.7	97.2	97.2	98.0	98.3	98.3	98.2	98.5	98.4
IP__ 110 kW*	157	131	37	84.6	87.6	88.5	96.4	97.1	97.2	97.9	98.3	98.3	98.1	98.4	98.4
IP__ 132 kW*	185	155	37	83.4	86.8	88.0	96.1	97.0	97.2	97.8	98.2	98.3	98.0	98.4	98.4
IP__ 160 kW*	229	192	37	84.1	87.3	88.4	96.3	97.1	97.3	97.9	98.3	98.3	98.1	98.4	98.4
IP__ 200 kW*	289	242	37	84.9	87.8	88.5	96.5	97.2	97.3	98.0	98.3	98.3	98.2	98.5	98.5
IP__ 250 kW*	347	290	37	85.2	88.0	88.7	96.6	97.2	97.4	98.0	98.3	98.4	98.2	98.5	98.5
IP__ 315 kW*	411	344	37	86.0	88.3	88.6	96.8	97.3	97.3	98.1	98.4	98.4	98.3	98.5	98.5

* IP__ can be replaced by IP21, IP55 or IP54.

12.6 Dimensions and weights

12.6.1 Enclosures A2-A5, B1-B4 and C1-C4

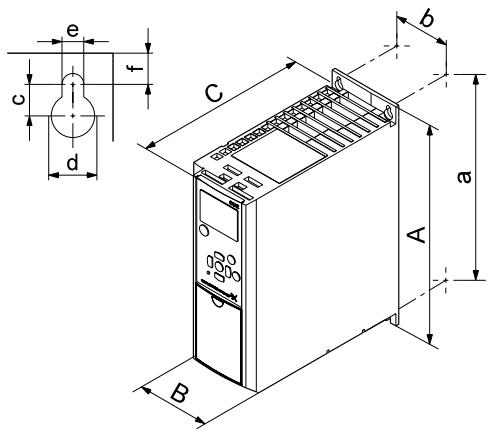

TM039000

Dimensions for enclosures A2 and A3

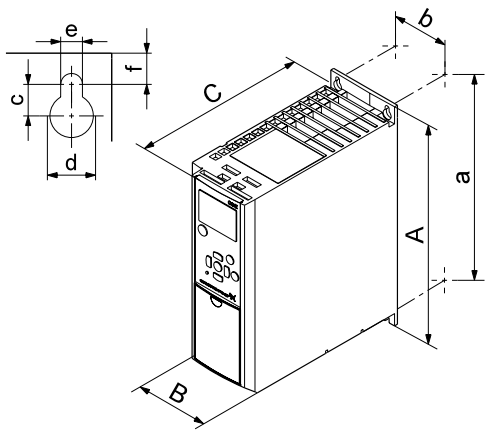

TM039000

Dimensions for enclosures A2 and A3

Enclosure	Max. height [mm]		Max. width [mm]		Max. depth [mm]		Screw holes [mm]				Weight [kg]
	A	a	B	b	C	C	c	Ød	Øe	f	
A2	268	257	90	70	205	219	8	11	5.5	9	4.9
IP21/NEMA1	375	350	90	70	205	219	8	11	5.5	9	5.3
A3	268	257	130	110	205	219	8	11	5.5	9	6.6
IP21/NEMA1	375	350	130	110	205	219	8	11	5.5	9	7
A4	420	401	200	171	175	175	8.2	12	6.5	6	9.2
A5	420	402	242	215	200	200	8.2	12	6.5	9	14
B1	480	454	242	210	260	260	12	19	9	9	23
B2	650	624	242	210	260	260	12	19	9	9	27
B3	399	380	165	140	248	262	8	12	6.8	7.9	12
IP21/NEMA1	475	-	165	-	249	262	8	12	6.8	7.9	-
B4	520	495	231	200	242	242	-	-	8.5	15	23.5
IP21/NEMA1	670	-	255	-	246	246	-	-	8.5	15	-
C1	680	648	308	272	310	310	12	19	9	9.8	45
C2	770	739	370	334	335	335	12	19	9	9.8	65
C3	550	521	308	270	333	333	-	-	8.5	17	35
IP21/NEMA1	755	-	329	-	337	337	-	-	8.5	17	-
C4	660	631	370	330	333	333	-	-	8.5	17	50
IP21/NEMA1	950	-	391	-	337	337	-	-	8.5	17	-

Related information

5.3 Mounting

12.6.2 Enclosures D1h, D2h, D5h and D7h

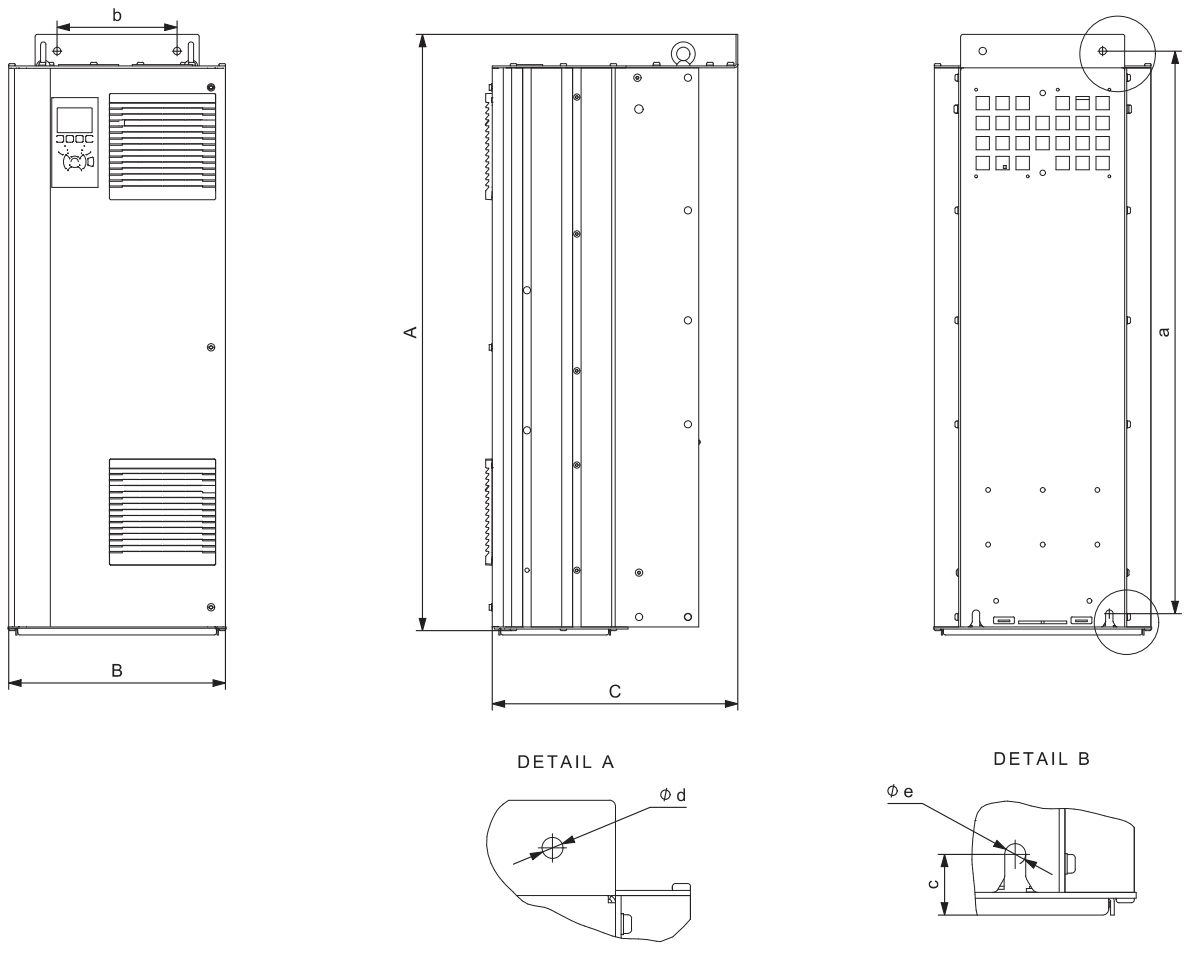

Dimensions for enclosures D1h and D2h

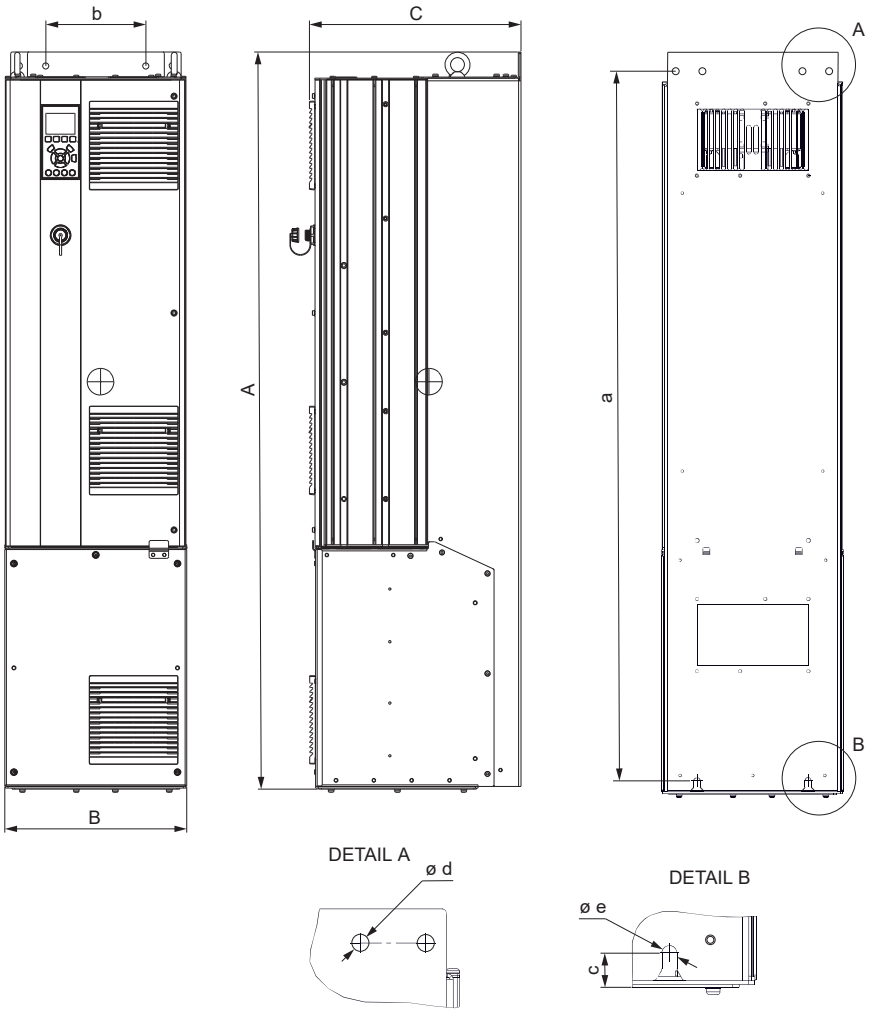

Dimensions for enclosure D5h

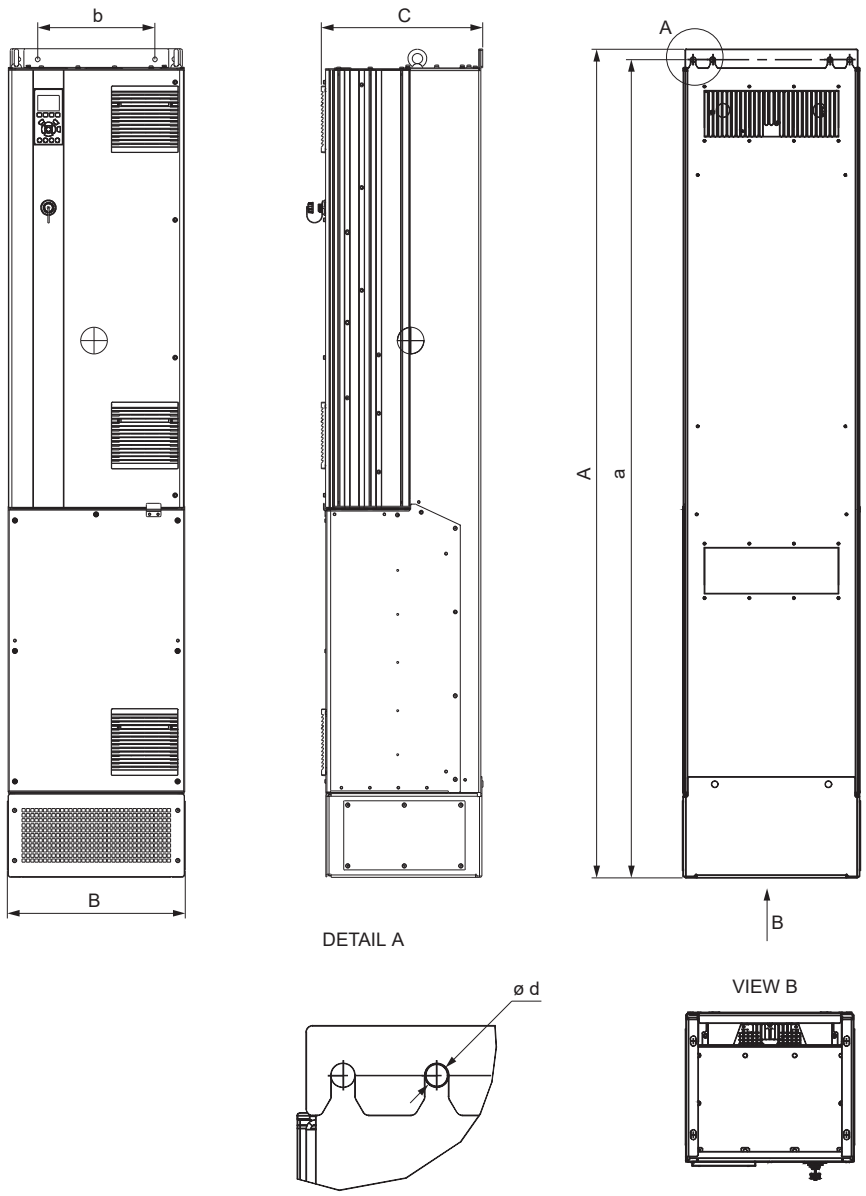

Dimensions for enclosure D7h

Enclosure	Max. height [mm]		Max. width [mm]		Max. depth [mm]	Screw holes [mm]				Weight [kg]
	A	a	B	b	C	c	Ød	Øe	f	
D1h	901	844	325	180	378	20	11	11	25	62
D2h	1107	1051	420	280	378	20	11	11	25	125
D5h	1324	1276	325	180	381	20	11	11	25	166
D7h	1998	1953	420	280	386	20	11	11	25	200

Shipping dimensions				
Enclosure	**Max. height [mm]**	**Max. width [mm]**	**Max. depth [mm]**	**Weight [kg]**
D1h	990	455	570	75
D2h	1210	550	570	125
D5h	1820	510	665	130
D7h	2460	585	675	215

12.7 Miscellaneous data

12.7.1 Sound pressure level

The sound pressure level of CUE is maximum 70 dB(A).

The sound pressure level of a motor controlled by a frequency converter may be higher than that of a corresponding motor which is not controlled by a frequency converter.

Related information

6.3 RFI filters

12.7.2 STO application

The STO signal must be SELV or PELV supplied.

European directive	Machinery Directive (2006/42/EC)	EN ISO 13849-1
		EN IEC 62061
		EN IEC 61800-5-2
	EMC Directive (2004/108/EC)	EN 50011
		EN 61000-6-3
		EN 61800-3
	Low Voltage Directive (2006/95/EC)	EN 50178
		EN 61800-5-1
Safety standards	Safety of machinery	EN ISO 13849-1, IEC 62061, IEC 60204-1
	Functional safety	IEC 61508-1 to -7, IEC 61800-5-2
Safety function		IEC 61800-5-2 (Safe Torque Off, STO) IEC 60204-1 (Stop Category 0)
Safety performance	ISO 13849-1	
	Category	Cat 3
	Diagnostic Coverage	DC: 90 %, medium
	Mean Time to Dangerous Failure	MTTFd: 14000 years, high
	Performance Level	PL d
	IEC 61508 / IEC 62061	
	Safety Integrity Level	SIL 2, SIL CL2
	Probability of Dangerous Failure per Hour	PFH: 1E-10/h High Demand Mode
	Probability of Dangerous Failure on Demand	PFD: 1E-10 Low Demand Mode
	Safe Failure Fraction	SFF: > 99 %
	Hardware Fault Tolerance	HFT: 0 (1oo1)
	Proof Test Interval T1	20 years
	Mission time TM	20 years
Reaction time	Input to output response time	Maximum 20 ms

13. Disposing of the product

This product or parts of it must be disposed of in an environmentally sound way.

1. Use the public or private waste collection service.
2. If this is not possible, contact the nearest Grundfos company or service workshop.
3. Dispose of the waste battery through the national collective schemes. If in doubt, contact your local Grundfos company.

The crossed-out wheelie bin symbol on a product means that it must be disposed of separately from household waste. When a product marked with this symbol reaches its end of life, take it to a collection point designated by the local waste disposal authorities. The separate collection and recycling of such products will help protect the environment and human health.

See also end-of-life information at *www.grundfos.com/product-recycling*.

Argentina
Bombas GRUNDFOS de Argentina S.A.
Ruta Panamericana km. 37.500industin
1619 - Garín Pcia. de B.A.
Tel.: +54-3327 414 444
Fax: +54-3327 45 3190

Australia
GRUNDFOS Pumps Pty. Ltd.
P.O. Box 2040
Regency Park
South Australia 5942
Tel.: +61-8-8461-4611
Fax: +61-8-8340-0155

Austria
GRUNDFOS Pumpen Vertrieb Ges.m.b.H.
Grundfosstraße 2
A-5082 Grödig/Salzburg
Tel.: +43-6246-883-0
Fax: +43-6246-883-30

Belgium
N.V. GRUNDFOS Bellux S.A.
Boomsesteenweg 81-83
B-2630 Aartselaar
Tel.: +32-3-870 7300
Fax: +32-3-870 7301

Belarus
Представительство ГРУНДФОС в Минске
220125, Минск
ул. Шафарнянская, 11, оф. 56, БЦ «Порт»
Тел.: +375 17 397 397 3
+375 17 397 397 4
Факс: +375 17 397 397 1
E-mail: minsk@grundfos.com

Bosnia and Herzegovina
GRUNDFOS Sarajevo
Zmaja od Bosne 7-7A
BiH-71000 Sarajevo
Tel.: +387 33 592 480
Fax: +387 33 590 465
www.ba.grundfos.com
E-mail: grundfos@bih.net.ba

Brazil
BOMBAS GRUNDFOS DO BRASIL
Av. Humberto de Alencar Castelo Branco, 630
CEP 09850 - 300
São Bernardo do Campo - SP
Tel.: +55-11 4393 5533
Fax: +55-11 4343 5015

Bulgaria
Grundfos Bulgaria EOOD
Slatina District
Iztochna Tangenta street no. 100
BG - 1592 Sofia
Tel.: +359 2 49 22 200
Fax: +359 2 49 22 201
E-mail: bulgaria@grundfos.bg

Canada
GRUNDFOS Canada inc.
2941 Brighton Road
Oakville, Ontario
L6H 6C9
Tel.: +1-905 829 9533
Fax: +1-905 829 9512

China
GRUNDFOS Pumps (Shanghai) Co. Ltd.
10F The Hub, No. 33 Suhong Road
Minhang District
Shanghai 201106 PRC
Tel.: +86 21 612 252 22
Fax: +86 21 612 253 33

Columbia
GRUNDFOS Colombia S.A.S.
Km 1.5 vía Siberia-Cota Conj. Potrero Chico,
Parque Empresarial Arcos de Cota Bod. 1A.
Cota, Cundinamarca
Tel.: +57(1)-2913444
Fax: +57(1)-8764586

Croatia
GRUNDFOS CROATIA d.o.o.
Buzinski prilaz 38, Buzin
HR-10010 Zagreb
Tel.: +385 1 6595 400
Fax: +385 1 6595 499
www.hr.grundfos.com

Czech Republic
GRUNDFOS Sales Czechia and Slovakia s.r.o.
Čajkovského 21
779 00 Olomouc
Tel.: +420-585-716 111

Denmark
GRUNDFOS DK A/S
Martin Bachs Vej 3
DK-8850 Bjerringbro
Tel.: +45-87 50 50 50
Fax: +45-87 50 51 51
E-mail: info_GDK@grundfos.com
www.grundfos.com/DK

Estonia
GRUNDFOS Pumps Eesti OÜ
Peterburi tee 92G
11415 Tallinn
Tel.: + 372 606 1690
Fax: + 372 606 1691

Finland
OY GRUNDFOS Pumput AB
Trukkikuja 1
FI-01360 Vantaa
Tel.: +358-(0) 207 889 500

France
Pompes GRUNDFOS Distribution S.A.
Parc d'Activités de Chesnes
57, rue de Malacombe
F-38290 St. Quentin Fallavier (Lyon)
Tel.: +33-4 74 82 15 15
Fax: +33-4 74 94 10 51

Germany
GRUNDFOS GMBH
Schlüterstr. 33
40699 Erkrath
Tel.: +49-(0) 211 929 69-0
Fax: +49-(0) 211 929 69-3799
E-mail: infoservice@grundfos.de
Service in Deutschland:
kundendienst@grundfos.de

Greece
GRUNDFOS Hellas A.E.B.E.
20th km. Athinon-Markopoulou Av.
P.O. Box 71
GR-19002 Peania
Tel.: +0030-210-66 83 400
Fax: +0030-210-66 46 273

Hong Kong
GRUNDFOS Pumps (Hong Kong) Ltd.
Unit 1, Ground floor, Siu Wai industrial Centre
29-33 Wing Hong Street & 68 King Lam Street, Cheung Sha Wan
Kowloon
Tel.: +852-27861706 / 27861741
Fax: +852-27858664

Hungary
GRUNDFOS Hungária Kft.
Tópark u. 8
H-2045 Törökbálint
Tel.: +36-23 511 110
Fax: +36-23 511 111

India
GRUNDFOS Pumps india Private Limited
118 Old Mahabalipuram Road
Thoraipakkam
Chennai 600 097
Tel.: +91-44 2496 6800

Indonesia
PT GRUNDFOS Pompa
Graha intirub Lt. 2 & 3
Jln. Cililitan Besar No.454. Makasar, Jakarta Timur
ID-Jakarta 13650
Tel.: +62 21-469-51900
Fax: +62 21-460 6910 / 460 6901

Ireland
GRUNDFOS (Ireland) Ltd.
Unit A, Merrywell Business Park
Ballymount Road Lower
Dublin 12
Tel.: +353-1-4089 800
Fax: +353-1-4089 830

Italy
GRUNDFOS Pompe Italia S.r.l.
Via Gran Sasso 4
I-20060 Truccazzano (Milano)
Tel.: +39-02-95838112
Fax: +39-02-95309290 / 95838461

Japan
GRUNDFOS Pumps K.K.
1-2-3, Shin-Miyakoda, Kita-ku
Hamamatsu
431-2103 Japan
Tel.: +81 53 428 4760
Fax: +81 53 428 5005

Korea
GRUNDFOS Pumps Korea Ltd.
6th Floor, Aju Building 679-5
Yeoksam-dong, Kangnam-ku, 135-916
Seoul, Korea
Tel.: +82-2-5317 600
Fax: +82-2-5633 725

Latvia
SIA GRUNDFOS Pumps Latvia
Deglava biznesa centrs
Augusta Deglava ielā 60
LV-1035, Rīga,
Tel.: + 371 714 9640, 7 149 641
Fax: + 371 914 9646

Lithuania
GRUNDFOS Pumps UAB
Smolensko g. 6
LT-03201 Vilnius
Tel.: + 370 52 395 430
Fax: + 370 52 395 431

Malaysia
GRUNDFOS Pumps Sdn. Bhd.
7 Jalan Peguam U1/25
Glenmarie industrial Park
40150 Shah Alam, Selangor
Tel.: +60-3-5569 2922
Fax: +60-3-5569 2866

Mexico
Bombas GRUNDFOS de México S.A. de C.V.
Boulevard TLC No. 15
Parque industrial Stiva Aeropuerto
Apodaca, N.L. 66600
Tel.: +52-81-8144 4000
Fax: +52-81-8144 4010

Netherlands
GRUNDFOS Netherlands
Veluwezoom 35
1326 AE Almere
Postbus 22015
1302 CA ALMERE
Tel.: +31-88-478 6336
Fax: +31-88-478 6332
E-mail: info_gnl@grundfos.com

New Zealand
GRUNDFOS Pumps NZ Ltd.
17 Beatrice Tinsley Crescent
North Harbour Industrial Estate
Albany, Auckland
Tel.: +64-9-415 3240
Fax: +64-9-415 3250

Norway
GRUNDFOS Pumper A/S
Strømsveien 344
Postboks 235, Leirdal
N-1011 Oslo
Tel.: +47-22 90 47 00
Fax: +47-22 32 21 50

Poland
GRUNDFOS Pompy Sp. z o.o.
ul. Klonowa 23
Baranowo k. Poznania
PL-62-081 Przeźmierowo
Tel.: (+48-61) 650 13 00
Fax: (+48-61) 650 13 50

Portugal
Bombas GRUNDFOS Portugal, S.A.
Rua Calvet de Magalhães, 241
Apartado 1079
P-2770-153 Paço de Arcos
Tel.: +351-21-440 76 00
Fax: +351-21-440 76 90

Romania
GRUNDFOS Pompe România SRL
S-PARK BUSINESS CENTER, Clădirea A2, etaj 2
Str. Tipografilor, Nr. 11-15, Sector 1, Cod 013714
Bucuresti, Romania
Tel.: 004 021 2004 100
E-mail: romania@grundfos.ro

Russia
ООО Грундфос Россия
ул. Школьная, 39-41
Москва, RU-109544, Russia
Тел. (+7) 495 564-88-00 (495) 737-30-00
Факс (+7) 495 564 8811
E-mail grundfos.moscow@grundfos.com

Serbia
Grundfos Srbija d.o.o.
Omladinskih brigada 90b
11070 Novi Beograd
Tel.: +381 11 2258 740
Fax: +381 11 2281 769
www.rs.grundfos.com

Singapore
GRUNDFOS (Singapore) Pte. Ltd.
25 Jalan Tukang
Singapore 619264
Tel.: +65-6681 9688
Faxax: +65-6681 9689

Slovakia
GRUNDFOS s.r.o.
Prievozská 4D 821 09 BRATISLAVA
Tel.: +421 2 5020 1426
sk.grundfos.com

Slovenia
GRUNDFOS LJUBLJANA, d.o.o.
Leskoškova 9e, 1122 Ljubljana
Tel.: +386 (0) 1 568 06 10
Fax: +386 (0)1 568 06 19
E-mail: tehnika-si@grundfos.com

South Africa
GRUNDFOS (PTY) LTD
16 Lascelles Drive, Meadowbrook Estate
1609 Germiston, Johannesburg
Tel.: (+27) 10 248 6000
Fax: (+27) 10 248 6002
E-mail: lgradidge@grundfos.com

Spain
Bombas GRUNDFOS España S.A.
Camino de la Fuentecilla, s/n
E-28110 Algete (Madrid)
Tel.: +34-91-848 8800
Fax: +34-91-628 0465

Sweden
GRUNDFOS AB
Box 333 (Lunnagårdsgatan 6)
431 24 Mölndal
Tel.: +46 31 332 23 000
Fax: +46 31 331 94 60

Switzerland
GRUNDFOS Pumpen AG
Bruggacherstrasse 10
CH-8117 Fällanden/ZH
Tel.: +41-44-806 8111
Fax: +41-44-806 8115

Taiwan
GRUNDFOS Pumps (Taiwan) Ltd.
7 Floor, 219 Min-Chuan Road
Taichung, Taiwan, R.O.C.
Tel.: +886-4-2305 0868
Fax: +886-4-2305 0878

Thailand
GRUNDFOS (Thailand) Ltd.
92 Chaloem Phrakiat Rama 9 Road
Dokmai, Pravej, Bangkok 10250
Tel.: +66-2-725 8999
Fax: +66-2-725 8998

Turkey
GRUNDFOS POMPA San. ve Tic. Ltd. Sti.
Gebze Organize Sanayi Bölgesi
Ihsan dede Caddesi
2. yol 200. Sokak No. 204
41490 Gebze/ Kocaeli
Tel.: +90 - 262-679 7979
Fax: +90 - 262-679 7905
E-mail: satis@grundfos.com

Ukraine
Бізнес Центр Європа
Столичне шосе, 103
м. Київ, 03131, Україна
Tel.: (+38 044) 237 04 00
Fax: (+38 044) 237 04 01
E-mail: ukraine@grundfos.com

United Arab Emirates
GRUNDFOS Gulf Distribution
P.O. Box 16768
Jebel Ali Free Zone, Dubai
Tel.: +971 4 8815 166
Fax: +971 4 8815 136

United Kingdom
GRUNDFOS Pumps Ltd.
Grovebury Road
Leighton Buzzard/Beds. LU7 4TL
Tel.: +44-1525-850000
Fax: +44-1525-850011

U.S.A.
GRUNDFOS Water Utility Headquarters
856 Koomey Road
Brookshire, Texas 77423 USA

Uzbekistan
Grundfos Tashkent, Uzbekistan
The Representative Office of Grundfos Kazakhstan in Uzbekistan
38a, Oybek street, Tashkent
Tel.: (+998) 71 150 3290 / 71 150 3291
Fax: (+998) 71 150 3292

Revision Info
Last revised on 09-09-2020

© 2021 Grundfos Holding A/S, all rights reserved.

Trademarks displayed in this material, including but not limited to Grundfos, the Grundfos logo and "be think innovate" are registered trademarks owned by The Grundfos Group. All rights reserved.

96780034 **06.2021**

ECM 1317100

GRUNDFOS