CR, CRN 95-155

Double shaft seal (Tandem)

Service instructions

be
think
innovate

GRUNDFOS

Original service instructions

CONTENTS

		Page
1.	**General information**	**3**
1.1	Hazard statements	3
1.2	Notes	3
1.3	Safety details to be aware of when working on the product	4
1.4	Contaminated products	4
1.5	Servicing the motor	4
2.	**Preparing the dismantling of the product**	**4**
2.1	Lifting the product	4
3.	**Dismantling and assembling the product to service the double shaft seals**	**5**
3.1	Motor	5
3.2	Upper shaft seal, motor stool, pump head cover and cover for lower shaft seal	5
4.	**Additional information**	**8**
4.1	Torques	8
4.2	Lubricants	8
4.3	Special service tools	9
4.4	Drawings	11

Read this document before starting service work on the product. Installation and service work must comply with local regulations and accepted codes of good practice.

Observe the safety instructions in the installation and operating instructions for the product.

1. General information

1.1 Hazard statements

The symbols and hazard statements below may appear in Grundfos installation and operating instructions, safety instructions and service instructions.

DANGER

Indicates a hazardous situation which, if not avoided, will result in death or serious personal injury.

WARNING

Indicates a hazardous situation which, if not avoided, could result in death or serious personal injury.

CAUTION

Indicates a hazardous situation which, if not avoided, could result in minor or moderate personal injury.

The hazard statements are structured in the following way:

SIGNAL WORD

Description of hazard

Consequence of ignoring the warning.

- Action to avoid the hazard.

1.2 Notes

The symbols and notes below may appear in Grundfos installation and operating instructions, safety instructions and service instructions.

Observe these instructions for explosion-proof products.

A blue or grey circle with a white graphical symbol indicates that an action must be taken.

A red or grey circle with a diagonal bar, possibly with a black graphical symbol, indicates that an action must not be taken or must be stopped.

If these instructions are not observed, it may result in malfunction or damage to the equipment.

Tips and advice that make the work easier.

1.3 Safety details to be aware of when working on the product

DANGER

Electric shock

Death or serious personal injury
- Before starting any work on the product, make sure that the power supply has been switched off and that it cannot be accidentally switched on.

WARNING

Falling objects

Death or serious personal injury
- Follow the lifting instructions.
- Use lifting equipment which is approved for the weight of the product.
- Persons must keep a safe distance to the product during lifting operations.
- Wear personal protective equipment.

For lifting instructions, see the instructions provided with the product.

WARNING

Falling objects

Death or serious personal injury
- Keep the product in a stable and fixed position when working on it.

WARNING

Corrosive liquids

Death or serious personal injury
- Wear personal protective equipment.

WARNING

Toxic liquids

Death or serious personal injury
- Wear personal protective equipment.

CAUTION

Hot or cold liquid

Minor or moderate personal injury
- Wear personal protective equipment.

CAUTION

Hot or cold surface

Minor or moderate personal injury
- Make sure that no one can accidentally come into contact with hot or cold surfaces.

We recommend that you repair pumps with motors of 7.5 kW and up at the pump site. Necessary lifting equipment must be available.

1.4 Contaminated products

CAUTION

Biological hazard

Minor or moderate personal injury
- Flush the pump thoroughly with water and rinse the pump parts in water after dismantling.

The product will be classified as contaminated if it has been used for a liquid which is injurious to health or toxic.

If you request Grundfos to service the product, contact Grundfos with details about the liquid before returning the product for service. Otherwise, Grundfos can refuse to accept the product for service.

Any application for service must include details about the liquid.

Clean the product in the best possible way before you return it.

Costs of returning the product are to be paid by the customer.

1.5 Servicing the motor

Grundfos MG and MGE motors

Service documentation is available in Grundfos Product Center > http://product-selection.grundfos.com/.

Motors of other makes

Contact the motor manufacturer.

2. Preparing the dismantling of the product

2.1 Lifting the product

Lifting procedures are described in the installation and operating instructions. Use the QR code or link below:

http://net.grundfos.com/qr/i/99078486

3. Dismantling and assembling the product to service the double shaft seals

These service instructions describe how to service the double shaft seals. Further details on how to service other pump parts are described in other service instructions, see the links below:

Service instructions for standard CR, CRN 95-255 pumps:

http://net.grundfos.com/qr/i/99233360

Service instructions for horizontal CR, CRN 95-255 pumps:

http://net.grundfos.com/qr/i/99545380

Parts are indicated by numbers and refer to the drawings in section *4.4 Drawings*.

Tools are indicated by letters and refer to section *4.3 Special service tools*.

3.1 Motor

3.1.1 Removal

1. Disconnect the power supply and remove the power cable.
2. Remove screws (7a) and coupling guards (7).
3. Remove screws (9) and coupling halves (10a). It may be necessary to gently loosen the coupling halves with a plastic hammer.
4. Remove the cylindrical pin (10) from the pump shaft (51).
5. Attach approved lifting equipment to the motor to prevent it from falling before proceeding with any further dismantling. For correct attachment of lifting equipment, see instructions supplied with the pump.
6. Remove the screws (28), washers (32) and nuts (36).
7. Carefully lift the motor off the pump using approved lifting equipment. For lifting the motor correctly, see instructions supplied with the pump.

3.1.2 Installation

1. Carefully lift the motor onto the motor stool (1a) using approved lifting equipment.
2. Install the screws (28), washers (32) and nuts (36).
3. Lubricate and tighten the nuts (36) to the specified torque. See section *4.1 Torques*.
4. Install the cylindrical pin (10) in the pump shaft (51).
5. Install the coupling halves (10a).
6. Lubricate and cross-tighten the screws (9). See sections *4.1 Torques* and *4.2 Lubricants*.
7. Install the coupling guards (7) and tighten the screws (7a). See section *4.1 Torques*.

3.2 Upper shaft seal, motor stool, pump head cover and cover for lower shaft seal

3.2.1 Preparations

1. Remove the motor as described in section *3.1.1 Removal*.
2. Close the isolating valves, if fitted, to avoid draining the pipe system.
3. Drain the pump by loosening the vent screw (18) and removing the plugs (25) and o-rings (38) placed in the pump base.

3.2.2 Dismantling

1. Clean the end of the shaft (51) with a cloth.
2. If the shaft seals (105) are to be reused, remove any marks or scratches on the shaft (51) by using service tool E together with a piece of fine emery cloth.
3. Loosen the three set screws (113) of the upper shaft seal (105). Note that the set screws must be loosened no more than 1/4 turn.
4. Loosen the upper shaft seal by using service tool A together with service tools O and P.
5. Carefully lift the shaft seal (105) off the shaft (51).
6. Attach approved lifting equipment to the motor stool (1a) to prevent it from falling before proceeding with any further dismantling.
7. Remove nuts (36) and washers (66a).
8. Remove the motor stool (1a).
9. Remove the pump head cover (2). It may be necessary to loosen it from the cover (2b) using a plastic hammer.
10. Remove the o-ring (37) from the pump head cover.
11. Remove the two upper plugs (25) from cover (2b) to gain access to the set screws (113) of the lower shaft seal. See fig. 1.
12. Loosen the three set screws (113) of the lower shaft seal (105). See fig. 1.

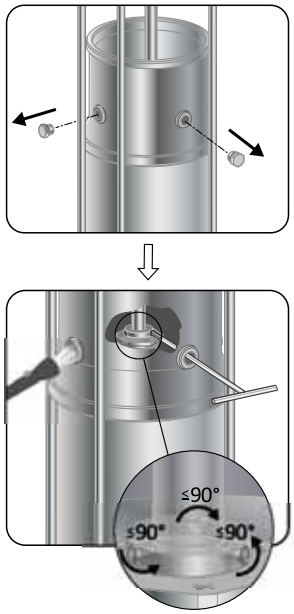

TM07 3634 0119

Fig. 1 Loosening set screws (113)

13. Remove the cover (2b).
14. Place the cover (2b) on a solid work table.
15. Loosen the lower shaft seal (105) and remove it from the cover (2b).

3.2.3 Assembly

1. Clean and smooth the shaft (51) using service tool E with an emery cloth supplied with the shaft seal kit.
2. Lubricate the o-rings in the lower shaft seal (105). See section *4.2 Lubricants*.
   Note: Avoid lubrication on the seal faces.
3. Install the lower shaft seal (105) in the cover (2b). See section *4.1 Torques*.
4. Lubricate and install a new o-ring (37) in the cover (2b).
5. Install the cover (2b) on the sleeve (55).
   Note: Make sure to align the cover (2b) according to the alignment marks on the sleeve (55). See fig. 2.

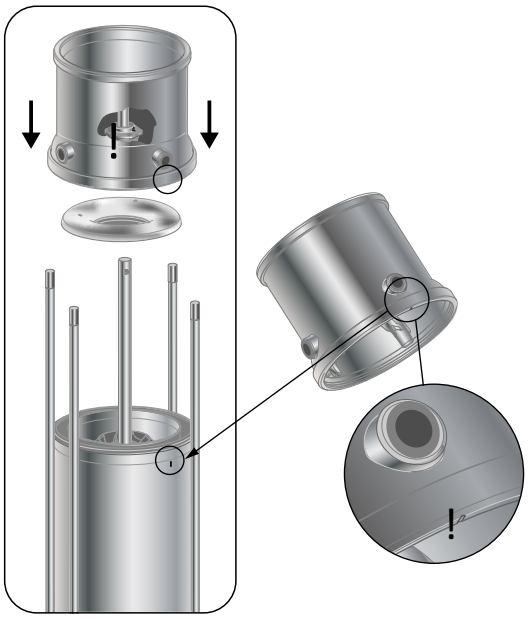

Fig. 2 Aligning cover (2), cover (2b) and sleeve (55)

6. Lubricate and install a new o-ring (37) in the pump-head cover (2).
7. Install the pump-head cover (2) on the cover (2b). Use service tool J to centre the chamber stack in the pump-head cover (2). See fig. 3.
   Note: Make sure to align the pump-head cover (2) according to the alignment marks on the pump-head cover (2), the cover (2b) and on the sleeve (55). See fig. 2.

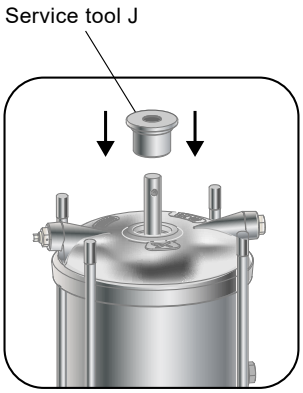

Fig. 3 Fitting service tool J in the pump-head cover (2)

8. Attach approved lifting equipment to the motor stool (1a) and lift the motor stool (1a) onto the pump-head cover (2).
9. Lubricate the threads of the staybolts (26).
10. Install washers (66a) and nuts (36) and cross-tighten the nuts (36) to the specified torque. See sections *4.1 Torques* and *4.2 Lubricants*.
11. Remove service tool J.
12. Install the upper shaft seal (105) in the cover (2). See section *4.1 Torques*.
13. Check that the height X is maximum 71 mm. See fig. 4.
    Note: If the measured height is not within the specifications, the pump has not been assembled correctly and the pump must be dismantled to find the reason.

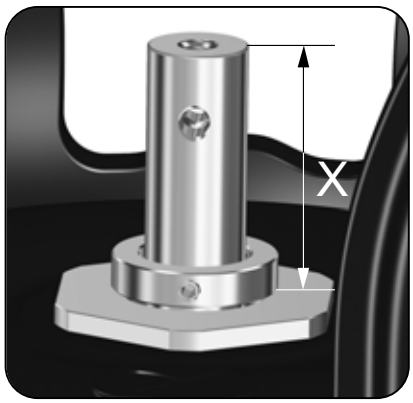

Fig. 4 Height measurement X

14. Install the motor as described in section *3.1.2 Installation*.
15. Install the cylindrical pin (10) in the pump shaft (51).
16. Install the coupling halves (10a).
17. Lubricate and tighten the screws (9), but leave loose. See section *4.2 Lubricants*.
18. Check that the gaps on either side of the coupling halves are equal. See fig. 5.

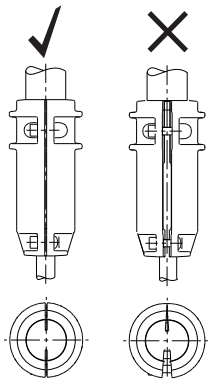

Fig. 5 Gap between coupling halves

19. Tighten the three set screws (113) of the upper shaft seal (105) to the specified torque. See section *4.1 Torques*.
20. Tighten the three set screws (113) of the lower shaft seal (105) to the specified torque. See section *4.1 Torques*.
    Note: Tighten the set screws (113) through one of the holes for plugs (25) in the cover (2b).

Shine a flash light through one of the holes for plugs (25) to easier locate the set screws (113) of the lower shaft seal (105).

21. Tighten the three set screws (113) of the upper shaft seal to the specified torque. See section *4.1 Torques*.
22. Lift the pump shaft with a crowbar and insert the adjusting fork F. See fig. 6.

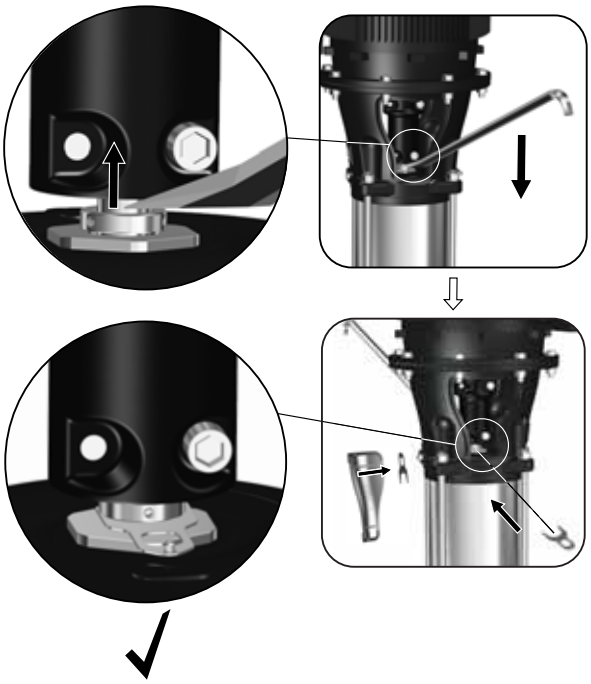

Fig. 6 Lifting pump shaft and fitting adjusting fork.

23. Cross-tighten the screws (9) to the specified torque. See *4.1 Torques*.
24. Pull the adjusting fork F free of the shaft (51) and place it on the backside of one of the coupling guards (7). See fig. 7.

Fig. 7 Fitting adjusting fork F on the backside of the coupling guard (7)

25. Install the coupling guards (7) and tighten the screws (7a). See section *4.1 Torques*.

4. Additional information

4.1 Torques

Pos.	Description	Dimensions	Torque [Nm]
2d	Screws for bracket	M6	6.5
7a	Coupling-guard screws	M5	4
9	Coupling screws	M10	85
		M16	100
18	Vent screw	1/2"	35
19	Plug	1/2"	35
25	Plug	1/2"	35
26b	Hexagon-socket head-cap screw	M8	15
36	Staybolt nuts	M16 (CR, CRN 95, PN 16/25/30)	160
		M20 (CR, CRN 95, PN 25)	220
		M20 (CR, CRN 95, PN 30/40)	320
		M20 (CR, CRN 95/125/155, PN 16)	190
		M20 (CR, CRN 125/155, PN 25/30)	320
		M24 (CR, CRN 125/155, PN 16)	190
		M24 (CR, CRN 125/155, PN 25/30/40)	625
		M30 (CR, CRN 185/215/255, PN 16)	410
		M30 (CR, CRN 185/215/255, PN 25)	710
		M30 (CR, CRN 185/215/255, PN 40)	950
36	Motor-stool nuts	M12	40
		M16	80
		M20	150
48	Split-cone nut	∅22 shaft (Hex 34)	70
		∅28 shaft (Hex 46)	130
		∅36 shaft (Hex 60)	290
105	Shaft seal	Hex 60	100
		Hex 75	150
113	Shaft-seal-set screws	M6 x 8	6
120f	Nut with left-hand thread	M12	60
		M16	140
L	Tool for installing neck ring	-	15

4.2 Lubricants

Pos.	Description	Lubricant	Product no.
9	Hexagon-socket screw	Un Lock	96611372
26	Staybolt		
36	Nut		
36			
37	O-ring	Rocol Sapphire Aqua-Sil	00RM2924
47a	Bearing		
109	O-ring for shaft seal (105)		
110	O-ring for shaft seal (105)		
120c	O-ring		
120g	Stationary ring		
120j	O-ring		

4.3 Special service tools

A	B	C	D
E	F	G	H H1 H2
I	J	K	L
M	N	O	P
Q			

4.3.1 Special tools

Pos.	Description	For pos.	Further information	Part number
A	Service tool for loosening and tightening shaft seal	105	For ∅22 pump shafts	99072586
			For ∅28 and ∅36 pump shafts	99072587
B	Eyebolt with swivel function	51	M10 x 1.5	-
C	Key for split-cone nut	48	For ∅22 pump shafts	SV0004
			For ∅28 pump shafts	99072584
			For ∅36 pump shafts	99072585
D	T-pin	51	-	99072581
E	Service tool for smoothening out marks on shaft	51	-	-
F	Adjusting fork	105	For ∅22, ∅28 and ∅36 pump shafts	-
G	Hook for thrust-handling device	120h	-	99176979
H1	Service tool for chamber stack		For vice	99081919
H2			For pump base	
I	Protection pipe for shaft	51	For ∅28 pump shafts reduced to ∅22 shaft ends	99081891
			For ∅36 pump shafts reduced to ∅22 shaft ends	99081920
			For ∅36 pump shafts reduced to ∅28 shaft ends	99081890
J	Service tool for alignment of pump head, sleeve and chamber stack	2, 51	For ∅22 pump shafts	99072588
			For ∅28 pump shafts	99072589
			For ∅36 pump shafts	99072590
K	Punch tools for bush	47, 47c, 47d	For ∅22 pump shafts	98369955
			For ∅28 and ∅36 pump shafts	99081918
L	Tool for installing neck ring	45a	For CR, CRN 95 - 255	99447875
M	Protective disc	48	For ∅28 pump shafts	99381867
			For ∅36 pump shafts	99381868
N	Screw-clamp for outer sleeve	55	-	99139064
O	Pin for torque wrench	105	14 x 18 x ∅14	SV0402
P	Torque wrench	105	-	-
Q	Hammering tool	48	For ∅28 pump shafts	99424834
			For ∅36 pump shafts	99424835

4.4 Drawings

4.4.1 Exploded views

Pumps with ∅22 shaft

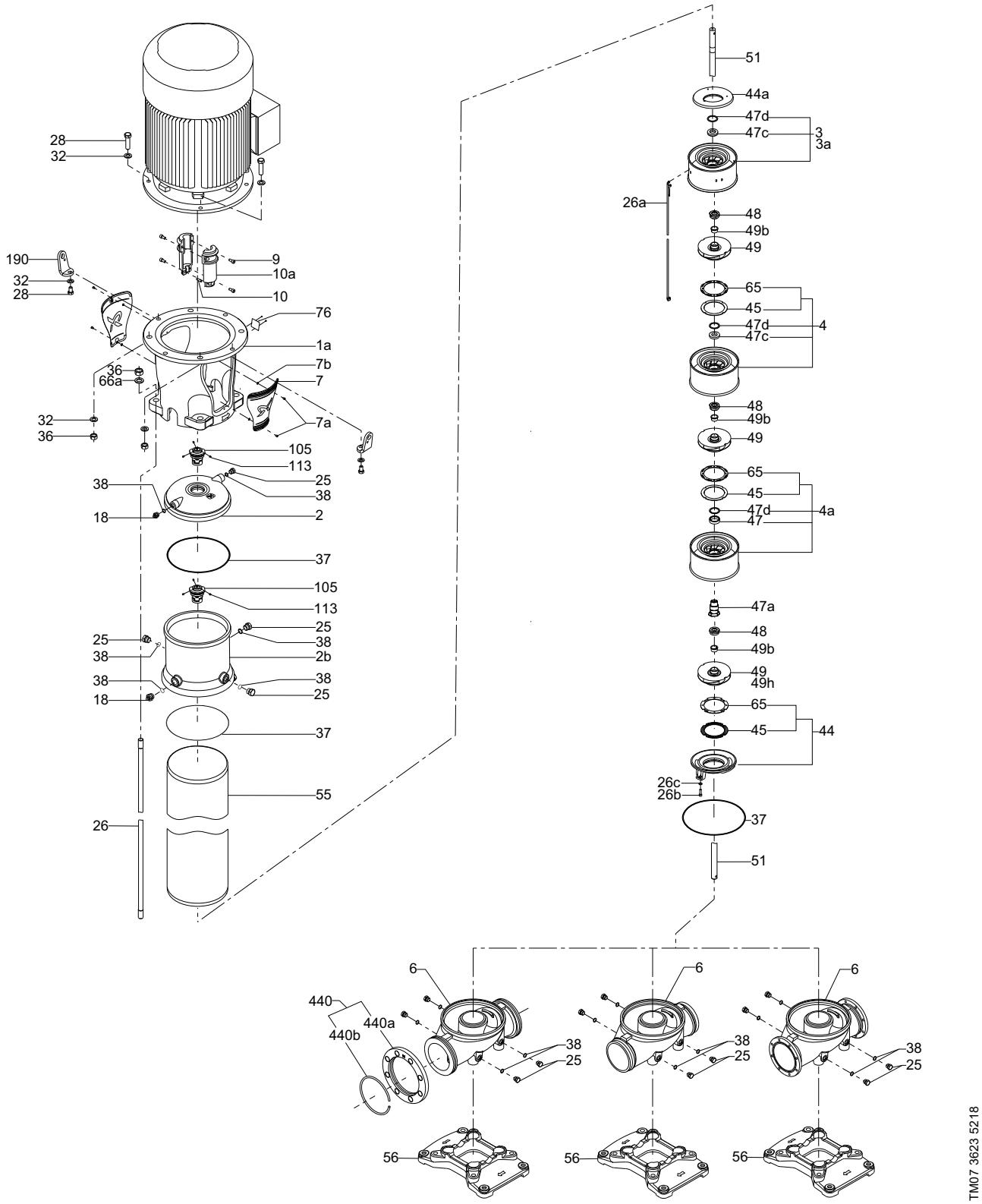

Fig. 8 Exploded view of CR, CRN pump with ∅22 mm shaft and tandem shaft seal arrangement

Pumps with ∅28 or ∅36 shaft

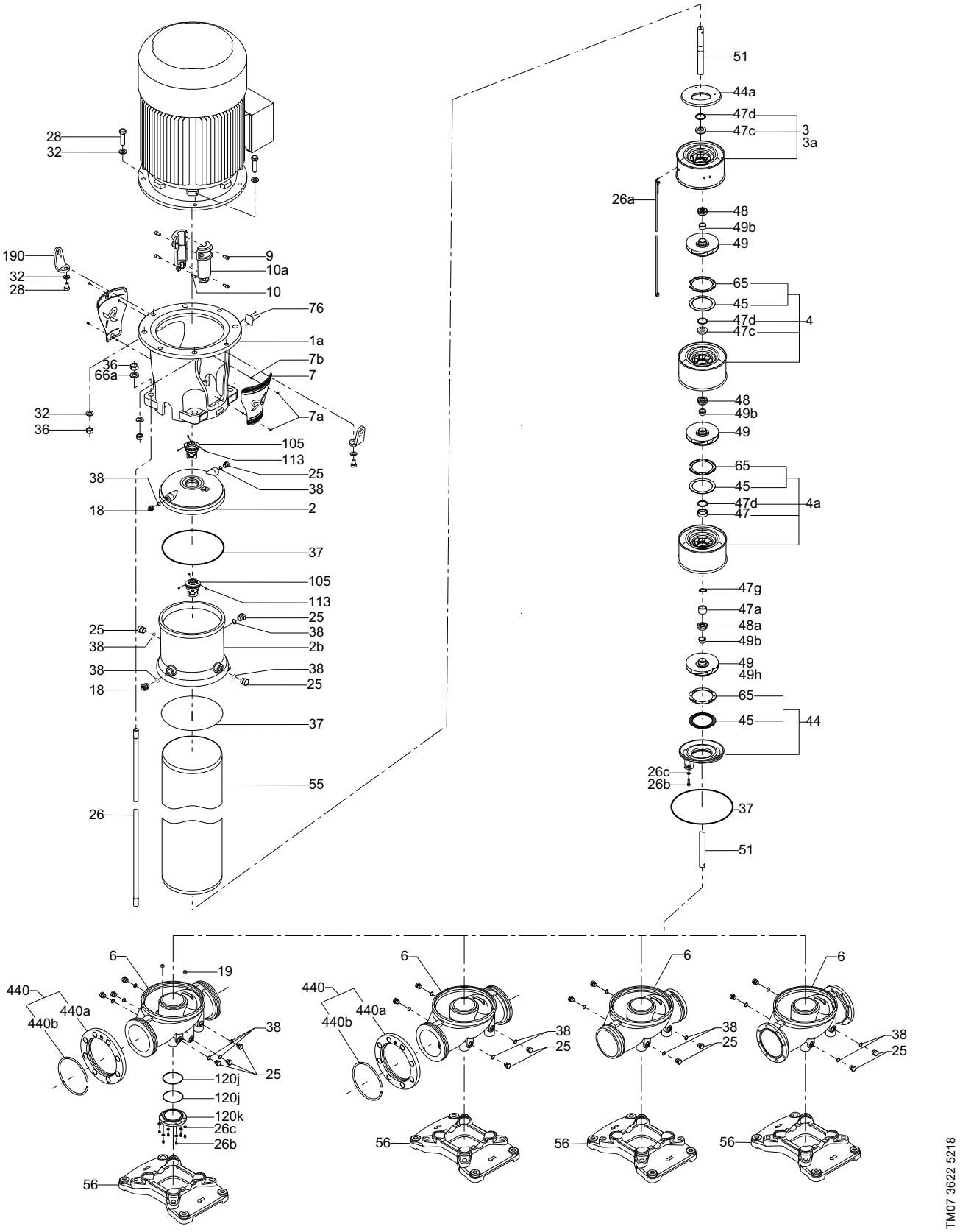

Fig. 9 Exploded view of CR, CRN pump with ∅28 or ∅36 mm shaft and tandem shaft seal arrangement

4.4.2 Sectional views

Pumps with ∅22 shaft

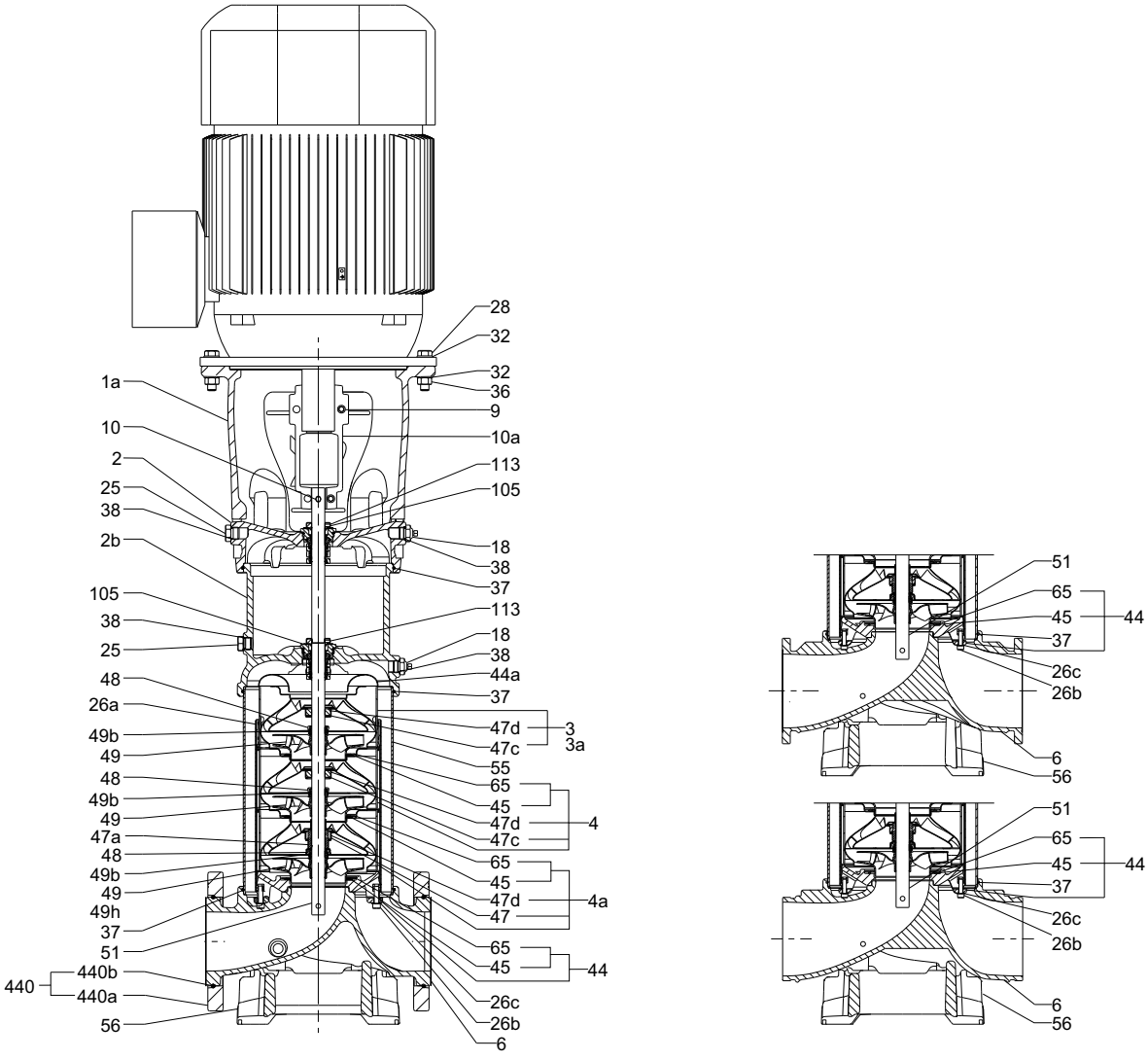

Fig. 10 Sectional view of CR, CRN pump with ∅22 shaft and tandem shaft seal arrangement

Pumps with ∅28 or ∅36 shaft

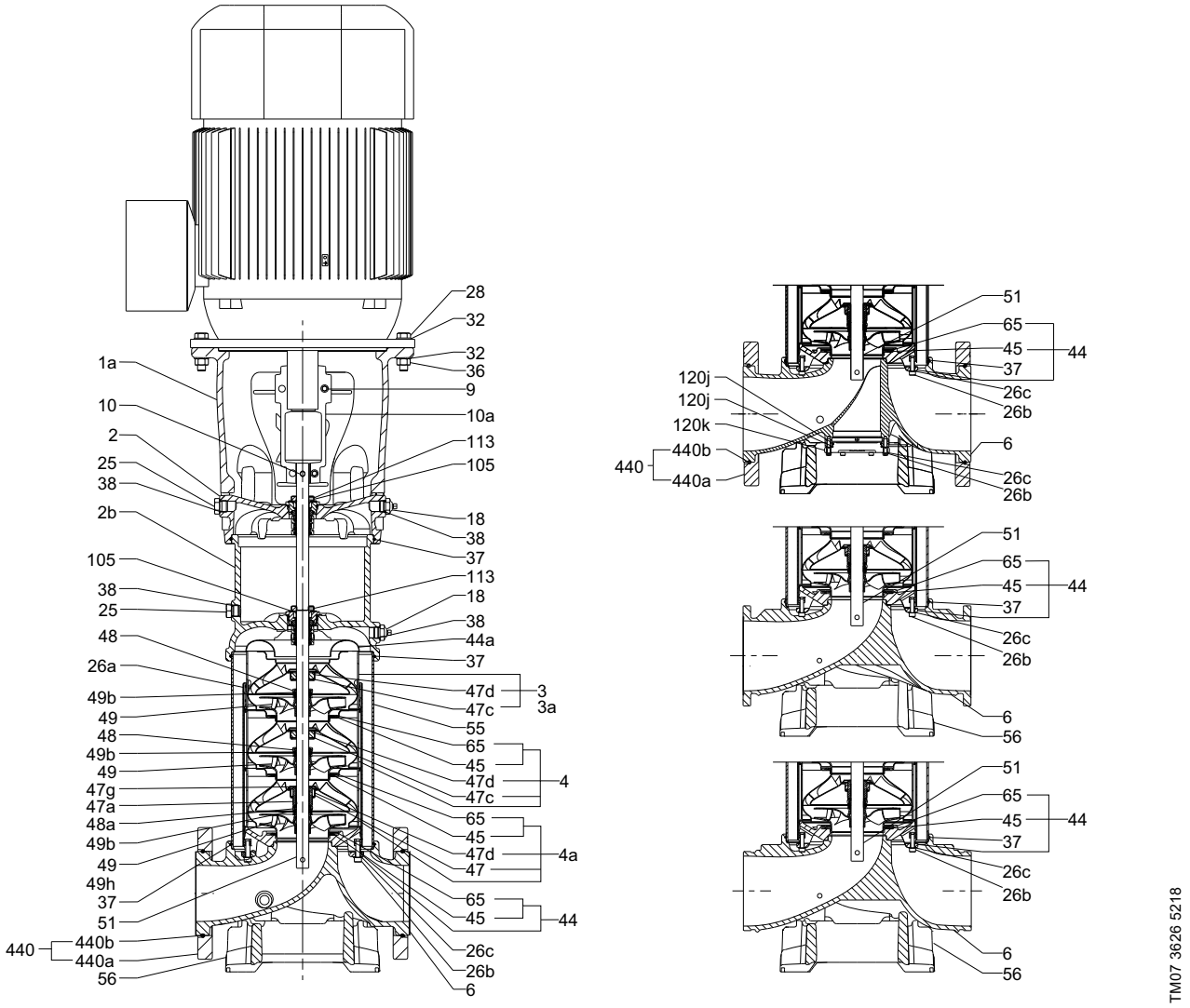

Fig. 11 Sectional view of CR, CRN pump with ∅28 or ∅36 shaft and tandem shaft seal arrangement

Argentina
Bombas GRUNDFOS de Argentina S.A.
Ruta Panamericana km. 37.500 Centro Industrial Garin
1619 Garín Pcia. de B.A.
Phone: +54-3327 414 444
Telefax: +54-3327 45 3190

Australia
GRUNDFOS Pumps Pty. Ltd.
P.O. Box 2040
Regency Park
South Australia 5942
Phone: +61-8-8461-4611
Telefax: +61-8-8340 0155

Austria
GRUNDFOS Pumpen Vertrieb Ges.m.b.H.
Grundfosstraße 2
A-5082 Grödig/Salzburg
Tel.: +43-6246-883-0
Telefax: +43-6246-883-30

Belgium
N.V. GRUNDFOS Bellux S.A.
Boomsesteenweg 81-83
B-2630 Aartselaar
Tél.: +32-3-870 7300
Télécopie: +32-3-870 7301

Belarus
Представительство ГРУНДФОС в Минске
220125, Минск
ул. Шафарнянская, 11, оф. 56, БЦ «Порт»
Тел.: +7 (375 17) 286 39 72/73
Факс: +7 (375 17) 286 39 71
E-mail: minsk@grundfos.com

Bosnia and Herzegovina
GRUNDFOS Sarajevo
Zmaja od Bosne 7-7A,
BH-71000 Sarajevo
Phone: +387 33 592 480
Telefax: +387 33 590 465
www.ba.grundfos.com
e-mail: grundfos@bih.net.ba

Brazil
BOMBAS GRUNDFOS DO BRASIL
Av. Humberto de Alencar Castelo Branco, 630
CEP 09850 - 300
São Bernardo do Campo - SP
Phone: +55-11 4393 5533
Telefax: +55-11 4343 5015

Bulgaria
Grundfos Bulgaria EOOD
Slatina District
Iztochna Tangenta street no. 100
BG - 1592 Sofia
Tel. +359 2 49 22 200
Fax. +359 2 49 22 201
email: bulgaria@grundfos.bg

Canada
GRUNDFOS Canada Inc.
2941 Brighton Road
Oakville, Ontario
L6H 6C9
Phone: +1-905 829 9533
Telefax: +1-905 829 9512

China
GRUNDFOS Pumps (Shanghai) Co. Ltd.
10F The Hub, No. 33 Suhong Road
Minhang District
Shanghai 201106
PRC
Phone: +86 21 612 252 22
Telefax: +86 21 612 253 33

COLOMBIA
GRUNDFOS Colombia S.A.S.
Km 1.5 vía Siberia-Cota Conj. Potrero Chico,
Parque Empresarial Arcos de Cota Bod. 1A.
Cota, Cundinamarca
Phone: +57(1)-2913444
Telefax: +57(1)-8764586

Croatia
GRUNDFOS CROATIA d.o.o.
Buzinski prilaz 38, Buzin
HR-10010 Zagreb
Phone: +385 1 6595 400
Telefax: +385 1 6595 499
www.hr.grundfos.com

GRUNDFOS Sales Czechia and Slovakia s.r.o.
Čajkovského 21
779 00 Olomouc
Phone: +420-585-716 111

Denmark
GRUNDFOS DK A/S
Martin Bachs Vej 3
DK-8850 Bjerringbro
Tlf.: +45-87 50 50 50
Telefax: +45-87 50 51 51
E-mail: info_GDK@grundfos.com
www.grundfos.com/DK

Estonia
GRUNDFOS Pumps Eesti OÜ
Peterburi tee 92G
11415 Tallinn
Tel: + 372 606 1690
Fax: + 372 606 1691

Finland
OY GRUNDFOS Pumput AB
Trukkikuja 1
FI-01360 Vantaa
Phone: +358-(0) 207 889 500

France
Pompes GRUNDFOS Distribution S.A.
Parc d'Activités de Chesnes
57, rue de Malacombe
F-38290 St. Quentin Fallavier (Lyon)
Tél.: +33-4 74 82 15 15
Télécopie: +33-4 74 94 10 51

Germany
GRUNDFOS GMBH
Schlüterstr. 33
40699 Erkrath
Tel.: +49-(0) 211 929 69-0
Telefax: +49-(0) 211 929 69-3799
e-mail: infoservice@grundfos.de
Service in Deutschland:
e-mail: kundendienst@grundfos.de

Greece
GRUNDFOS Hellas A.E.B.E.
20th km. Athinon-Markopoulou Av.
P.O. Box 71
GR-19002 Peania
Phone: +0030-210-66 83 400
Telefax: +0030-210-66 46 273

Hong Kong
GRUNDFOS Pumps (Hong Kong) Ltd.
Unit 1, Ground floor
Siu Wai Industrial Centre
29-33 Wing Hong Street &
68 King Lam Street, Cheung Sha Wan
Kowloon
Phone: +852-27861706 / 27861741
Telefax: +852-27858664

Hungary
GRUNDFOS Hungária Kft.
Tópark u. 8
H-2045 Törökbálint,
Phone: +36-23 511 110
Telefax: +36-23 511 111

India
GRUNDFOS Pumps India Private Limited
118 Old Mahabalipuram Road
Thoraipakkam
Chennai 600 096
Phone: +91-44 2496 6800

Indonesia
PT. GRUNDFOS POMPA
Graha Intirub Lt. 2 & 3
Jln. Cililitan Besar No.454. Makasar, Jakarta Timur
ID-Jakarta 13650
Phone: +62 21-469-51900
Telefax: +62 21-460 6910 / 460 6901

Ireland
GRUNDFOS (Ireland) Ltd.
Unit A, Merrywell Business Park
Ballymount Road Lower
Dublin 12
Phone: +353-1-4089 800
Telefax: +353-1-4089 830

Italy
GRUNDFOS Pompe Italia S.r.l.
Via Gran Sasso 4
I-20060 Truccazzano (Milano)
Tel.: +39-02-95838112
Telefax: +39-02-95309290 / 95838461

Japan
GRUNDFOS Pumps K.K.
1-2-3, Shin-Miyakoda, Kita-ku, Hamamatsu
431-2103 Japan
Phone: +81 53 428 4760
Telefax: +81 53 428 5005

Korea
GRUNDFOS Pumps Korea Ltd.
6th Floor, Aju Building 679-5
Yeoksam-dong, Kangnam-ku, 135-916
Seoul, Korea
Phone: +82-2-5317 600
Telefax: +82-2-5633 725

Latvia
SIA GRUNDFOS Pumps Latvia
Deglava biznesa centrs
Augusta Deglava ielā 60, LV-1035, Rīga,
Tālr.: + 371 714 9640, 7 149 641
Fakss: + 371 914 9646

Lithuania
GRUNDFOS Pumps UAB
Smolensko g. 6
LT-03201 Vilnius
Tel: + 370 52 395 430
Fax: + 370 52 395 431

Malaysia
GRUNDFOS Pumps Sdn. Bhd.
7 Jalan Peguam U1/25
Glenmarie Industrial Park
40150 Shah Alam
Selangor
Phone: +60-3-5569 2922
Telefax: +60-3-5569 2866

Mexico
Bombas GRUNDFOS de México S.A. de C.V.
Boulevard TLC No. 15
Parque Industrial Stiva Aeropuerto
Apodaca, N.L. 66600
Phone: +52-81-8144 4000
Telefax: +52-81-8144 4010

Netherlands
GRUNDFOS Netherlands
Veluwezoom 35
1326 AE Almere
Postbus 22015
1302 CA ALMERE
Tel.: +31-88-478 6336
Telefax: +31-88-478 6332
E-mail: info_gnl@grundfos.com

New Zealand
GRUNDFOS Pumps NZ Ltd.
17 Beatrice Tinsley Crescent
North Harbour Industrial Estate
Albany, Auckland
Phone: +64-9-415 3240
Telefax: +64-9-415 3250

Norway
GRUNDFOS Pumper A/S
Strømsveien 344
Postboks 235, Leirdal
N-1011 Oslo
Tlf.: +47-22 90 47 00
Telefax: +47-22 32 21 50

Poland
GRUNDFOS Pompy Sp. z o.o.
ul. Klonowa 23
Baranowo k. Poznania
PL-62-081 Przeźmierowo
Tel: (+48-61) 650 13 00
Fax: (+48-61) 650 13 50

Portugal
Bombas GRUNDFOS Portugal, S.A.
Rua Calvet de Magalhães, 241
Apartado 1079
P-2770-153 Paço de Arcos
Tel.: +351-21-440 76 00
Telefax: +351-21-440 76 90

Romania
GRUNDFOS Pompe România SRL
Bd. Biruintei, nr 103
Pantelimon county Ilfov
Phone: +40 21 200 4100
Telefax: +40 21 200 4101
E-mail: romania@grundfos.ro

Russia
ООО Грундфос Россия
ул. Школьная, 39-41
Москва, RU-109544, Russia
Тел. (+7) 495 564-88-00 (495) 737-30-00
Факс (+7) 495 564 8811
E-mail grundfos.moscow@grundfos.com

Serbia
Grundfos Srbija d.o.o.
Omladinskih brigada 90b
11070 Novi Beograd
Phone: +381 11 2258 740
Telefax: +381 11 2281 769
www.rs.grundfos.com

Singapore
GRUNDFOS (Singapore) Pte. Ltd.
25 Jalan Tukang
Singapore 619264
Phone: +65-6681 9688
Telefax: +65-6681 9689

Slovakia
GRUNDFOS s.r.o.
Prievozská 4D
821 09 BRATISLAVA
Phona: +421 2 5020 1426
sk.grundfos.com

Slovenia
GRUNDFOS LJUBLJANA, d.o.o.
Leskoškova 9e, 1122 Ljubljana
Phone: +386 (0) 1 568 06 10
Telefax: +386 (0)1 568 06 19
E-mail: tehnika-si@grundfos.com

South Africa
Grundfos (PTY) Ltd.
16 Lascelles Drive, Meadowbrook Estate
1609 Germiston, Johannesburg
Tel.: (+27) 10 248 6000
Fax: (+27) 10 248 6002
E-mail: lgradidge@grundfos.com

Spain
Bombas GRUNDFOS España S.A.
Camino de la Fuentecilla, s/n
E-28110 Algete (Madrid)
Tel.: +34-91-848 8800
Telefax: +34-91-628 0465

Sweden
GRUNDFOS AB
Box 333 (Lunnagårdsgatan 6)
431 24 Mölndal
Tel.: +46 31 332 23 000
Telefax: +46 31 331 94 60

Switzerland
GRUNDFOS Pumpen AG
Bruggacherstrasse 10
CH-8117 Fällanden/ZH
Tel.: +41-44-806 8111
Telefax: +41-44-806 8115

Taiwan
GRUNDFOS Pumps (Taiwan) Ltd.
7 Floor, 219 Min-Chuan Road
Taichung, Taiwan, R.O.C.
Phone: +886-4-2305 0868
Telefax: +886-4-2305 0878

Thailand
GRUNDFOS (Thailand) Ltd.
92 Chaloem Phrakiat Rama 9 Road,
Dokmai, Pravej, Bangkok 10250
Phone: +66-2-725 8999
Telefax: +66-2-725 8998

Turkey
GRUNDFOS POMPA San. ve Tic. Ltd. Sti.
Gebze Organize Sanayi Bölgesi
Ihsan dede Caddesi,
2. yol 200. Sokak No. 204
41490 Gebze/ Kocaeli
Phone: +90 - 262-679 7979
Telefax: +90 - 262-679 7905
E-mail: satis@grundfos.com

Ukraine
Бізнес Центр Європа
Столичне шосе, 103
м. Київ, 03131, Україна
Телефон: (+38 044) 237 04 00
Факс.: (+38 044) 237 04 01
E-mail: ukraine@grundfos.com

United Arab Emirates
GRUNDFOS Gulf Distribution
P.O. Box 16768
Jebel Ali Free Zone
Dubai
Phone: +971 4 8815 166
Telefax: +971 4 8815 136

United Kingdom
GRUNDFOS Pumps Ltd.
Grovebury Road
Leighton Buzzard/Beds. LU7 4TL
Phone: +44-1525-850000
Telefax: +44-1525-850011

U.S.A.
GRUNDFOS Pumps Corporation
9300 Loiret Blvd.
Lenexa, Kansas 66219
Phone: +1-913-227-3400
Telefax: +1-913-227-3500

Uzbekistan
Grundfos Tashkent, Uzbekistan The Representative Office of Grundfos Kazakhstan in Uzbekistan
38a, Oybek street, Tashkent
Телефон: (+998) 71 150 3290 / 71 150 3291
Факс: (+998) 71 150 3292

Addresses Revised 15.01.2019

Trademarks displayed in this material, including but not limited to Grundfos, the Grundfos logo and "be think innovate" are registered trademarks owned by The Grundfos Group. All rights reserved. © 2020 Grundfos Holding A/S, all rights reserved.

99557546 0320
ECM: 1279993