LS

Smaller models, flow range up to 3000 m³/h

Installation and operating instructions

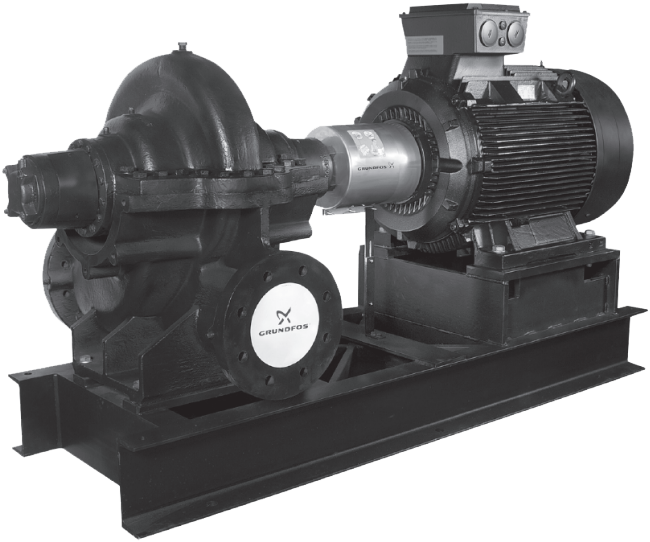

GRUNDFOS

LS

English (GB)

Installation and operating instructions 4

Original installation and operating instructions

Table of contents

1. General information 5
1.1 Hazard statements 5
1.2 Notes 5

2. Receiving the product. 6
2.1 Inspecting the product 6
2.2 Temporary storage 6

3. Installing the product 6
3.1 Location 6
3.2 Mechanical installation 6
3.3 Electrical connection 14
3.4 Pipes 15
3.5 Inlet pipe guidelines. 17

4. Starting up the product 20
4.1 General information. 20
4.2 Prestart checks 20
4.3 Priming 21
4.4 Startup. 22
4.5 Final alignment 22

5. Product introduction 30
5.1 Applications 30
5.2 Pumped liquids 30
5.3 Identification. 30

6. Servicing the product 34
6.1 Contaminated pumps 34
6.2 Operating checks 34
6.3 Maintaining the product. 34

7. Taking the product out of operation 36
7.1 Short-term shutdown 36
7.2 Long-term shutdown 36

8. Fault finding the product 38
8.1 The pump delivers no liquid 38
8.2 The pump does not deliver enough liquid . . 38
8.3 The pump does not create enough pressure 39
8.4 The pump loses liquid after running for a short time 40
8.5 The pump consumes too much power 40
8.6 The motor is overloaded 41
8.7 Vibrations 41
8.8 Cavitation noise 42
8.9 The pump bearings are overheated 42
8.10 The pump operates for a short time and then stops 42

9. Technical data 43
9.1 Operating conditions 43
9.2 Flange forces and torques 45

10. Disposing of the product 46

1. General information

Read this document before you install the product. Installation and operation must comply with local regulations and accepted codes of good practice.

Grundfos LS horizontal split case pumps are supplied either as a complete pump with motor, base frame and approved coupling guard or as a bare shaft pump.

These instructions apply to both types.

The LS pump can be driven by an electric motor or another type of driver. In the following we assume that the pump is driven by an electric motor.

1.1 Hazard statements

The symbols and hazard statements below may appear in Grundfos installation and operating instructions, safety instructions and service instructions.

DANGER

Indicates a hazardous situation which, if not avoided, will result in death or serious personal injury.

WARNING

Indicates a hazardous situation which, if not avoided, could result in death or serious personal injury.

CAUTION

Indicates a hazardous situation which, if not avoided, could result in minor or moderate personal injury.

The hazard statements are structured in the following way:

SIGNAL WORD

Description of the hazard

Consequence of ignoring the warning

- Action to avoid the hazard.

1.2 Notes

The symbols and notes below may appear in Grundfos installation and operating instructions, safety instructions and service instructions.

Observe these instructions for explosion-proof products.

A blue or grey circle with a white graphical symbol indicates that an action must be taken.

A red or grey circle with a diagonal bar, possibly with a black graphical symbol, indicates that an action must not be taken or must be stopped.

If these instructions are not observed, it may result in malfunction or damage to the equipment.

Tips and advice that make the work easier.

2. Receiving the product

2.1 Inspecting the product

The pump is delivered from the factory in a crate or wooden box specially designed for transport by a forklift truck or a similar vehicle.

Upon receipt, check the pump visually to determine whether any damage has happened to it during transport or handling.

Check especially for these points:

1. broken or cracked equipment, including base frame, motor or pump feet and flanges
2. broken motor fan cover, bent eyebolts or damaged terminal box
3. missing parts.

Parts or accessories are sometimes wrapped individually or fastened to the equipment.

If any damage or losses have occurred, promptly notify Grundfos' representative and the carrier's agent at once.

Bolts for LS bare shaft pumps have US threads for which inch tools are required.

Bolts for coupling guard and for mounting of pump and motor on the base frame have metric threads.

2.2 Temporary storage

If you do not install or operate the pump soon after arrival, store it in a clean, dry place with slow, moderate changes in ambient temperature. Protect the pump from moisture, dust, dirt and foreign bodies. Avoid exposing the motor to direct, intense sunlight, rain, snow, ice and also dust for an extended period of time. Attach a covering structure or an additional cover when using or storing the product outdoors. Follow these precautions before and during storage:

1. Make sure that the bearings are filled with the recommended grease to prevent moisture from entering around the shaft. See section Lubrication.
2. Make sure that the inlet and outlet ports and all other openings are covered with cardboard, wood or masking tape to prevent foreign objects from entering the pump.
3. Cover the unit with a tarpaulin or other suitable covering if it is to be stored without a protective covering.
4. Rotate the shaft two turns every two weeks to prevent corrosion of the bearing surfaces and the stuffing box or sticking of the shaft seal faces.

Related information

6.3.3 Lubrication

3. Installing the product

3.1 Location

Install the pump with accessibility for inspection and maintenance. Allow ample space and headroom for the use of an overhead crane or hoist sufficiently strong to lift the unit.

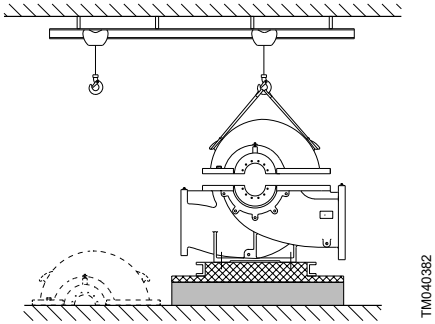

LS pump with accessibility for inspection and headroom for the use of an overhead crane

Install the pump as close as possible to the supply of pumped liquid, so that the inlet pipe is as short and direct as possible.

3.2 Mechanical installation

WARNING
Crushing of hands
Death or serious personal injury

- Make sure that all installations are performed by persons experienced in the placement, alignment and connection of pumping equipment.

3.2.1 Lifting the product

WARNING
Crushing hazard
Death or serious personal injury

- Handling must be performed by qualified persons.
- When unloading the pump, lift equally at four or more points on the base frame. Do not lift by the motor or by the pump. Do not lift by the flanges or by the eyebolts on the motor.

Lift the pump by means of nylon straps and shackles.

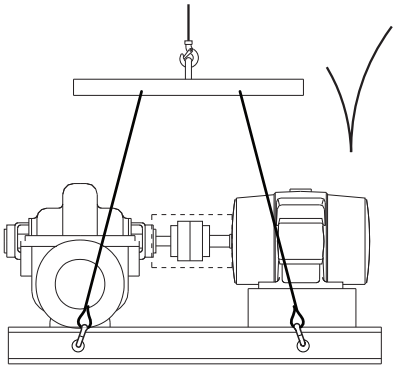

How to lift and handle the LS pumps

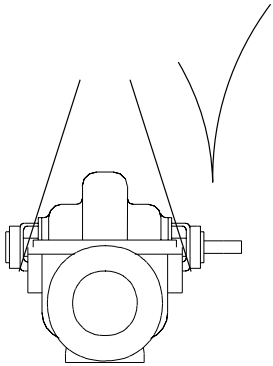

How to lift and handle the LS bare shaft pumps

3.2.2 Foundation

We recommend that you install the pump on a concrete foundation, which is heavy enough to provide permanent and rigid support for the entire pump. The foundation must be capable of absorbing any vibration, normal strain or shock. We recommend that the weight of the concrete foundation is 3 times the weight of the complete pump unit. For specific requirements, consult the contractor, engineer, or established industry standards.

In installations where silent operation is particularly important, we recommend a foundation that is up to 5 times as heavy as the complete pump unit.

3.2.3 Vibration dampers

Vibration dampers may be required to prevent pump vibrations from being transmitted to the building or the pipes. In order to select the right type of vibration damper, you need this information:

- Forces transmitted through the damper.
- Motor speed. Take the motor speed into account in the case of speed control.
- Desired dampening in %. The recommended value is 70 %.

The choice of vibration dampers differs from installation to installation. In certain cases a wrong damper may increase the vibration level. Vibration dampers must therefore be sized by the supplier of the vibration dampers.

3.2.4 Expansion joints

Expansion joints provide these advantages:

- absorption of thermal expansion and contraction of pipes caused by variations in liquid temperature
- reduction of mechanical influences in connection with pressure surges in the pipes
- isolation of structure-borne noise in the pipes (only rubber bellows expansion joints).

Do not fit expansion joints to make up for inaccuracies in the pipes, such as centre displacement or misalignment of flanges.

Fit the expansion joints at a minimum distance of 2 pipe diameters (DN) away from the pump flange on the inlet side. This prevents turbulence in the joints, thus ensuring optimum inlet conditions and minimum pressure drop on the outlet side.

At flow velocities greater than 2.4 m/s, we recommend that you fit larger expansion joints matching the pipes.

3.2.5 Foundation and preliminary alignment

The foundation and preliminary alignment procedure has four steps:

1. pouring of foundation
2. shimming of base frame
3. preliminary alignment
4. grouting.

Pouring of foundation

We recommend the following procedure to ensure a good foundation:

1. Pour the foundation without interruptions to within 19-32 mm of the final level. Use vibrators to ensure that the concrete is evenly distributed. The top surface must be well scored and grooved before the concrete sets. This provides a bonding surface for the grout.
2. Embed anchor bolts in the concrete as shown in figure below. Allow enough bolt length to reach through grout, shims, lower base frame, nuts and washers.

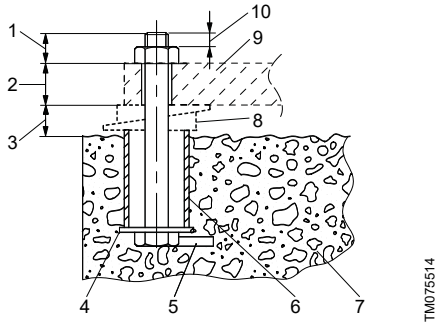

Typical anchor bolt design

Pos.	Description
1	Bolt length above base frame
2	Thickness of base frame
3	19 to 32 mm allowance for grout
4	Washer
5	Lug
6	Pipe sleeve
7	Top of foundation left rough
8	Wedges and shims left in place
9	Base frame
10	5 to 10 mm

Let the foundation cure for several days before the base frame is shimmed and grouted.

Shimming of base frame

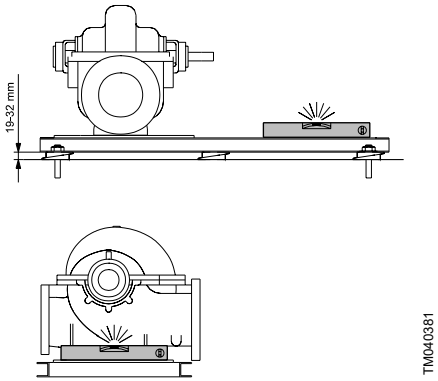

Shimming of base frame and levelling of pump

1. Lift/jack up the base frame to the final level 19-32 mm above the concrete foundation, and support the base frame by means of blocks and shims, both at the anchor bolts and midway between bolts. See figure above.
2. Level the base frame by adding or removing shims under the base frame. See figure above.
3. Tighten the anchor bolt nuts against the base frame. Make sure the pipes can be aligned to the pump flanges without putting strain on the pipes or flanges.

3.2.5.1 Preliminary alignment

DANGER
Electric shock
Death or serious personal injury
- Before starting work on the pump, make sure that the power supply has been switched off and that it cannot be accidentally switched on.

The pump and motor are pre-aligned on the base frame from the factory. Some deformation of the base frame may occur during transport, and it is therefore essential to check alignment at the installation site before final grouting.

Inaccurate alignment results in vibration and excessive wear on the bearings, shaft and wear rings.

Carry out alignment of the motor only, as pipe strain will occur if the pump is shifted.

If the coupling guard is installed, remove it before the alignment. For align methods, see sections Aligning the pump and motor with a straightedge ruler, Aligning the pump and motor with a dial indicator and Aligning the pump and motor with a laser equipment.

Related information

4.5.4 Tightening torques

4.5.1 Aligning the pump and motor with a straightedge ruler

4.5.2 Aligning the pump and motor with a dial indicator

4.5.3 Aligning the pump and motor with a laser equipment

4.5.5 Pin coupling air-gap width S2

3.2.5.2 Spacer coupling installation

Preparation

- Check the spacer coupling for possible transport damage and missing parts. Clean the spacer coupling components.
- Proper lifting and assembling devices should be on hand.

Installing the spacer coupling

Make sure the spacer coupling is clean.

Make sure the keys fit in key slots between shafts and hubs properly with a small clearance over the top to keep dynamic balance.

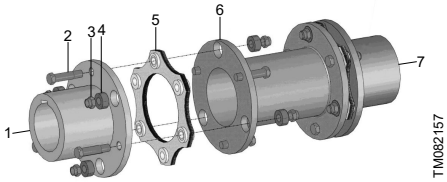

Spacer coupling

Pos.	Description
1	Hub
2	Bolt
3	Lock nut
4	Sleeve
5	Disc pack
6	Spacer
7	Hub

1. Install the hub on the shaft. Make sure the shaft end align with the hub end. If necessary, place limit blocks to limit the gap between coupling and shaft shoulder. Use shaft lock nut or end plate to secure the hub axially. To achieve clearance fit, install the hub on the shaft directly and use soft hammer to hit the hub gently.

After the installation of hubs, apply rust prevention to the hubs immediately.

2. Use dial indicator to check hub circumference and end face. Adjust the hub alignment according to the measurements. The deviation of hub circumference and end face mustn't exceed 0.05 mm. For hub flange diameter bigger than 250 mm, the maximum deviation is 0.08 mm. Reinstall the hub if the deviation exceeds the limit. Refer to section Tightening torques for spacer coupling.

3. Place the motor and the pump in working position and measure the distance F between the two hub surfaces of the motor and pump. Take four readings along circumference with 90° interval and calculate the average value. Adjust the position of the motor and pump until the value of F meets the dimension Ls in the assembly drawing, Ls is the distance between pump shaft end and motor shaft end. The deviation should be from 0 mm to 0.4 mm.

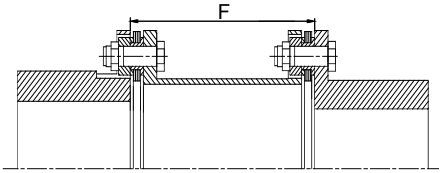

TM082166

4. Choose one of the following methods that suits best for the installation:
   a. Use professional aligning apparatus.
   b. Use the dial indicator to measure the deviation of the circumference and the end face. Determine the location of shafts by analyzing the measurements, and then adjust the shafts based on the results. See section on Accepted misalignment.

   In order to improve the precision, use two dial indicators that locate equidistant to axis to measure the deviation of the end face.

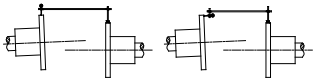

TM082161

5. Place the disc packs and the spacer between the hubs, tighten with bolts, sleeves and self-locking nuts or slotted nuts. The hexagon bolts (2) must be installed next to flanges (8). The sleeves (4) and the nuts (3) must be installed next to each other. Reversion is prohibited.Refer to the figure below.

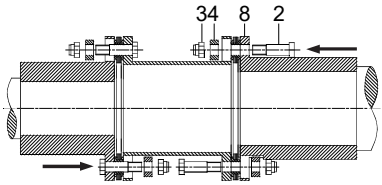

TM082160

- With short shafts distance, pre-install the bolts into spacer and then perform the step above.

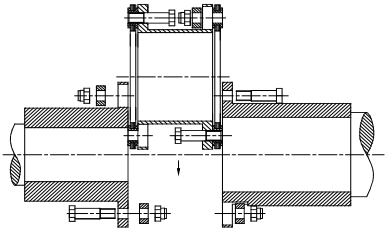

TM082159

- The dynamically balanced coupling parts must be installed according to the position mark (M) on the coupling. Fasteners with the same specification in the same set of coupling can be replaced with each other.

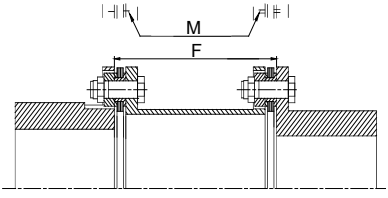

TM082158

6. Tighten the nuts diagonally and evenly and make sure the bolts won't rotate when tightening. Use the torque wrench to achieve the required tightening torque at least in two rounds. See section on Torque.

Apply a little grease to the nut thread before the installation.

Self-locking nuts can be used repeatedly. But if the nuts can be freely tighten to bolts manually or the nuts have defects, the users mustn't use them.

For slotted nuts, insert a cotter pin to secure and make sure it won't loosen when operating.

7. Turn the motor for two or three rounds slowly. Make sure it can rotates freely.

Accepted misalignment

Accepted misalignment is usually provided by device manufacturer. Refer to table below for the deviations of hubs and radial direction if you don't have the data.

The deviation of hub's end face and radial direction

Type	Dial indication	
	End face (mm)	Radial (mm)
TDE4-4	0.10	0.16
TDE4-6	0.10	0.10
TDE4-14	0.15	0.15
TDE4-22	0.20	0.20
TDE4-44	0.25	0.25
TDE4-112	0.25	0.25
TDE4-142	0.30	0.30
TDE4-220	0.35	0.35
TD6-4	0.08	0.08
TD6-11	0.10	0.10
TD6-21	0.10	0.10
TD6-42	0.15	0.15
TD (P) 6-66	0.10	0.10
TD (P) 6-150	0.15	0.15
TD (P) 6-210	0.15	0.15
TD (P) 6-370	0.20	0.20
TD (P) 6-470	0.20	0.20
TD (P) 6-523	0.25	0.25
TD (P) 6-840	0.25	0.25
TD (P) 6-1300	0.25	0.25
TD (P) 6-2100	0.30	0.30
TD (P) 6-2700	0.30	0.30
TD (P) 6-3300	0.35	0.35
TD (P) 6-4200	0.40	0.40
TD (P) 8-840	0.15	0.15
TD (P) 8-1700	0.20	0.20
TD (P) 8-2700	0.20	0.20
TD (P) 8-3300	0.25	0.25
TD (P) 8-4200	0.30	0.30
TD (P) 8-6600	0.30	0.30
TD (P) 8-8400	0.35	0.35
TD (P) 8-9011	0.35	0.35
TD (P) 8-9015	0.40	0.40
TD (P) 8-9021	0.45	0.45
TD (P) 8-9026	0.45	0.45
TD (P) 10-5300	0.15	0.15
TD (P) 10-8400	0.20	0.20
TD (P) 10-9011	0.20	0.20
TD (P) 10-9013	0.20	0.20
TD (P) 10-9019	0.20	0.20
TD (P) 10-9023	0.25	0.25
TD (P) 10-9033	0.25	0.25

Tightening torques for spacer coupling

Refer to this tightening torques table when install the spacer coupling.

Type	Tightening torque (Nm)
M4	3
M5	8
M6	8
M8	15
M10	25
M12	45
M16	100
M18	150
M20	180
M24	350
M27	500
M30	700
M36	1200
M42	1900

3.2.5.3 Grouting

Grouting compensates for uneven foundation, distributes the weight of the unit, dampens vibrations and prevents shifting. Use an approved, non-shrinking grout. If you have questions or doubts about the grouting, consult an expert on grouting.

Proceed as follows:

1. Build a strong formwork around the foundation to contain the grout.
2. Soak the top of the concrete foundation thoroughly, then remove surface water.
3. Fill the formwork with grout up to the top edge of the base frame. See figure below. Allow the grout to dry thoroughly before attaching the pipe to the pump. 24 hours is sufficient time with approved grouting procedure.
4. When the grout has thoroughly hardened, check the anchor bolt nuts and tighten them if necessary.
5. Approximately two weeks after the grout has been poured, or when the grout has thoroughly dried, apply an oil-based paint to the exposed edges of the grout to prevent air and moisture from getting in contact with the grout.

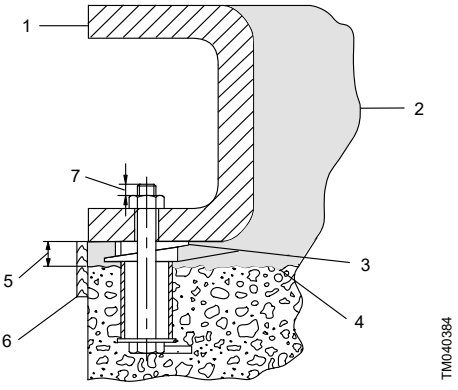

Sectional view of foundation with anchor bolt, grouting and base frame

Pos.	Description
1	Base frame
2	Grout
3	Levelling wedges or shims left in place
4	Top of foundation left rough
5	19 to 32 mm grout
6	Formwork

3.2.6 Installing coupling guard

1. Align the notch of coupling guard and the lubricating nipple (2). Then install the coupling guard (4) to the outer ring of the bearing housing (1) (or [1] the fixing ring for pre-installation).

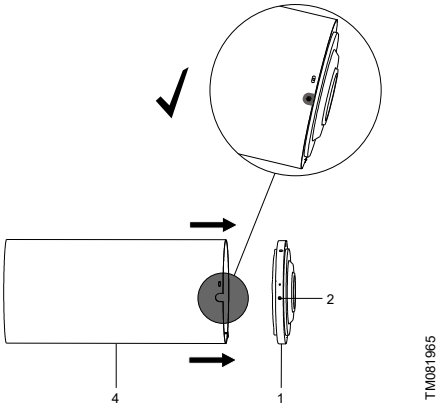

Installing the coupling guard to bearing housing

2. Install the coupling guard spacer (5) to the other side of coupling guard, and then fasten bolts (6) (3).

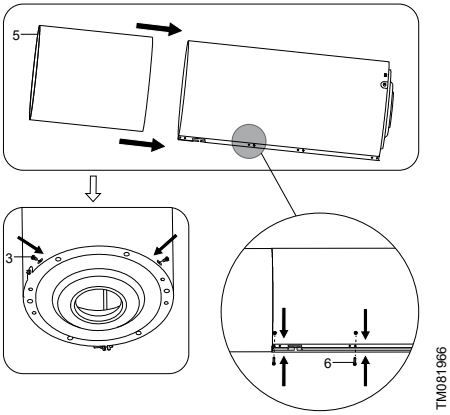

Install the coupling guard spacer

3. Pre-install the supporting foot (7) on the base frame via bolts (11).

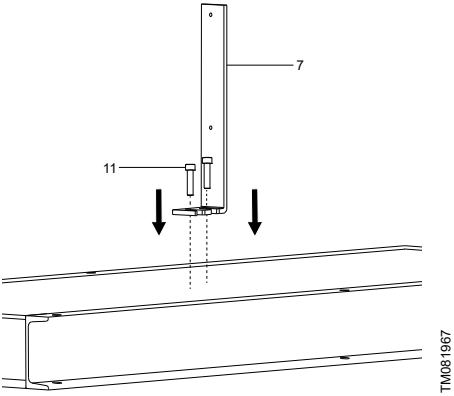

Pre-installing the supporting foot

The purpose of pre-installation is to provide space for adjustment in the following steps.

Normally, the base frame is a common base frame for motor and pump. For separated base frame, install the supporting foot directly to the concrete foundation.

4. Pre-install supporting bracket (8) to coupling guard (4) and supporting foot (7) via bolts (9) (10).

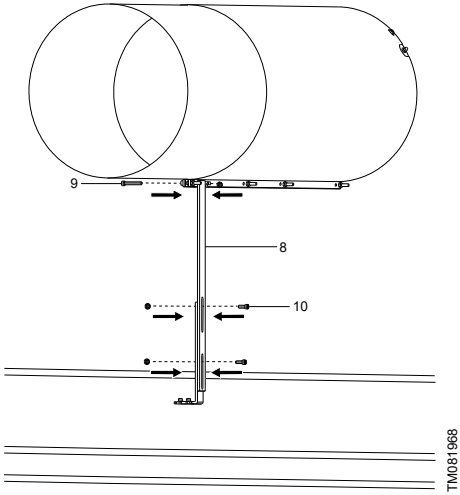

Pre-installing supporting bracket

The purpose of pre-installation is to provide space for adjustment in the following steps.

5. Adjust the axial position of coupling guard and the height of supporting bracket. Then fasten the bolts (9) (10) (11).
6. Adjust the location of coupling guard spacer. Make sure it can match properly with coupling guard and motor cover.

1) The fixing ring of pre-installation is only used in LS 1000-700-X. Align the the notch of fixing ring with lubricating nipple and install the coupling guard to fixing ring, then tighten the fasteners.

3.3 Electrical connection

The electrical connections must be carried out by an authorised electrician in accordance with local regulations.

DANGER
Electric shock
Death or serious personal injury

- Before you remove the terminal box cover and before you remove or dismantle the pump, make sure that the power supply has been switched off and that it cannot be accidentally switched on.

The operating voltage and frequency are marked on the motor nameplate.

Make sure that the motor is suitable for the power supply of the installation site.

Carry out the electrical connections as shown on the motor nameplate or in the wiring diagram on the back of the terminal box cover.

For further information, contact the motor supplier.

DANGER
Electric shock
Death or serious personal injury

- Whenever you use powered equipment in explosive surroundings, observe the rules and regulations generally or specifically imposed by the relevant responsible authorities or trade organisations.

3.3.1 Frequency converter operation

You can connect all three-phase motors to a frequency converter.

However, frequency converter operation often exposes the motor insulation system to a heavier load and causes the motor to be more noisy than usual due to eddy currents caused by voltage peaks.

If in doubt whether the supplied motor can handle frequency converter operation, contact the motor supplier.

In addition, large motors driven via a frequency converter will be loaded by bearing currents.

When the pump is operated via a frequency converter, check the following operating conditions:

Operating conditions	Action
2-, 4- and 6-pole motors, frame size 225 and larger	Ensure that the non-drive-end motor bearing is electrically isolated.
Noise-critical applications	Fit a dU/dt filter between the motor and the frequency converter. It reduces the voltage peaks and thus the noise.
Particularly noise-critical applications	Fit a sinusoidal filter.
Cable length	Fit a cable that meets the specifications laid down by the frequency converter supplier. The length of the cable between the motor and frequency converter affects the motor load.
Supply voltage up to 500 V	Make sure that the motor is suitable for frequency converter operation.
Supply voltage between 500 V and 690 V	• Fit a dU/dt filter. It reduces the voltage peaks and thus the noise. • Or make sure that the motor has reinforced insulation.
Supply voltage of 690 V and upwards	• Fit a dU/dt filter. • Make sure that the motor has reinforced insulation.

3.4 Pipes

Protective covers are fitted to the inlet and outlet ports to prevent foreign bodies from entering the pump during transportation and installation. Remove these covers from the pump before connecting any pipes.

Inlet and outlet pipe

In order to minimise friction losses and hydraulic noise in the pipes, choose a pipe that is one or two sizes larger than the pump inlet and outlet ports. Typically, flow velocities must not exceed 2 m/s (6 ft/sec) for the inlet pipe (port) and 3 m/s (9 ft/sec) for the outlet pipe (port).

Make sure that the NPSH available (NPSHA) is higher than the NPSH required (NPSHR). NPSH = Net Positive Suction Head.

3.4.1 General precautions

When installing the pipes, observe these precautions:

- Always run the pipes directly to the pump.
- Do not move the pump to the pipes. This could make the final alignment impossible and cause stress to the pump flanges and pipes.

  Make sure that both the inlet and outlet pipes are independently supported near the pump so that no strain is transmitted to the pump when you tighten the flange bolts. Use pipe hangers or other supports with necessary spacing to provide support.

- When you use expansion joints in the pipe system, fit the joints at a minimum distance of 2 pipe diameters away from the pump on the inlet side. This prevents turbulence in the joints, thus ensuring optimum inlet conditions.
- Install the pipes as straight as possible and avoid unnecessary bends. Where necessary, use 45° or long-sweep 90° fittings to reduce friction loss.
- Make sure that all pipe joints are tight.
- Where you use flanged joints, ensure that the inside diameters match properly.
- Remove burrs and sharp edges when making up joints.
- Make sure that the pipes do not cause stress or strain in the pump.
- Provide for expansion of pipe material by means of expansion joints on both sides of the pump.
- Always allow sufficient space and accessibility for maintenance and inspection.

3.4.2 Inlet pipes

Place the pump below system liquid level whenever possible. This will facilitate priming, assure a steady liquid flow and provide a positive suction head.

The sizing and installation of the inlet pipe is extremely important.

You can avoid many NPSH problems if you install the inlet pipe properly. See section General precautions.

In section **Inlet pipe guidelines**, common inlet pipe installations are illustrated for two situations:

- **Flooded systems:** Closed systems and open systems where the liquid level is above the pump inlet.
- **Suction lift systems:** Closed systems and open systems where the liquid level is below the pump inlet.

Related information

3.4.1 General precautions

10. Disposing of the product

3.4.3 Valves in the inlet pipe

If the pump is operating under permanent suction lift conditions, install a non-return valve in the inlet pipe to avoid having to prime the pump each time it is started. The non-return valve must be of the flap type or a foot-valve with a minimum of pressure loss.

3.4.4 Outlet pipe

The outlet pipe is usually preceded by a non-return valve and an isolating or throttle valve. The non-return valve protects the pump against excessive counterpressure and reverse rotation of the pump and prevents backflow through the pump in case of operational stop or failure of the motor.

In order to minimise friction losses and hydraulic noise in the pipes, flow velocities must not exceed 3 m/s (9 ft/sec) in the outlet pipe (port).

On long horizontal runs, keep the pipe as level as possible.

Avoid high spots, such as loops, as they will collect air and throttle the system or lead to uneven pumping.

3.4.5 Auxiliary pipes

Drains

Install the drain pipes from the pump casing and stuffing boxes to a convenient disposal point.

Flushing pipes

- Pumps fitted with stuffing boxes

When the inlet pressure is below the ambient pressure, supply the stuffing boxes with liquid to provide lubrication and prevent the ingress of air. This is normally achieved via a flushing pipe from the outlet side to the stuffing box. You can fit a control valve or orifice plate in the flushing pipe to control the pressure to the stuffing box.

If the pumped liquid is dirty and cannot be used for flushing the packing rings, we recommend a separate clean, compatible liquid supply to the stuffing box at 1 bar (15 psi) above the inlet pressure.

- Pumps fitted with mechanical seals

Seals requiring recirculation will normally be provided with a flushing pipe from the pump casing.

3.4.6 Measuring instruments

To ensure continuous monitoring of operation, we recommend that you install pressure gauges on the pump inlet and outlet flanges. The pressure gauge on the inlet side must be capable of measuring vacuum. The pressure tappings must only be opened for test purposes. The measuring range of the outlet side pressure gauge must be minimum 20 % above the maximum pump outlet pressure.

When measuring with pressure gauges on the pump flanges, note that a pressure gauge does not register dynamic pressure (velocity pressure). The diameters of the inlet and outlet flanges are different, and this results in different flow velocities in the two flanges. Consequently, the pressure gauge on the outlet flange will not show the pressure stated in the technical documentation, but a value which may be lower.

3.5 Inlet pipe guidelines

3.5.1 Common guidelines

Avoid air pockets or turbulence in the inlet pipe

Never use reducers in a horizontal inlet pipe as shown in figure Reducers resulting in air pockets and turbulence. Instead, use an eccentric reducer as illustrated in figure Correctly mounted reducer.

Correct

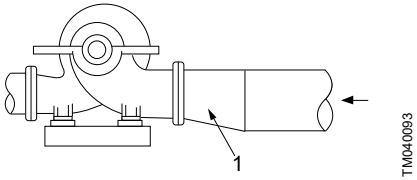

Correctly mounted reducer

Pos.	Description
1	Eccentric reducer

Wrong

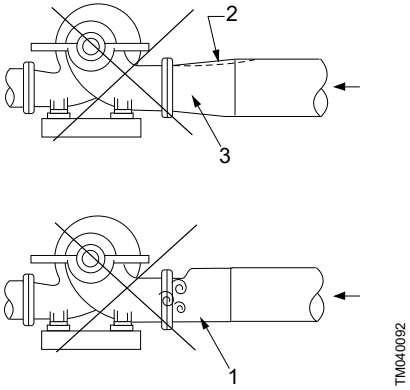

Reducers resulting in air pockets and turbulence

Pos.	Description
1	Turbulent flow
2	Air pocket
3	Concentric reducer

3.5.2 Flooded systems

Closed systems and open systems where the liquid level is above the pump inlet.

Correct

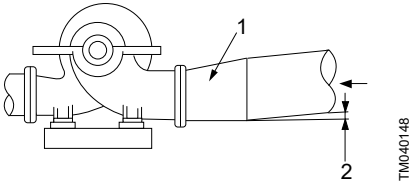

Correctly mounted inlet pipe

Pos.	Description
1	Eccentric reducer
2	Pipe sloping down towards pump

3.5.3 Suction lift systems

Open systems where the liquid level is below the pump inlet.

Install the inlet pipe sloping upwards towards the inlet port. Any high point in the pipe will be filled with air and thus prevent proper operation of the pump. When reducing the pipe to the inlet port diameter, use an eccentric reducer with the eccentric side down to avoid air pockets.

Correct

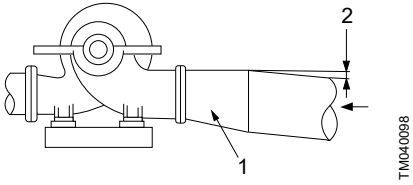

Correctly mounted inlet pipe

Pos.	Description
1	Eccentric reducer
2	Pipe sloping up towards pump

Wrong

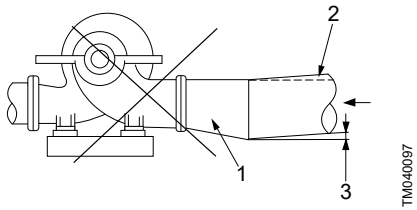

Inlet pipe resulting in air pockets

Pos.	Description
1	Eccentric reducer
2	Air pocket
3	Pipe sloping down towards pump

3.5.4 Inlet pipe if the feed line comes in different horizontal planes

Avoid high spots, such as loops, as they will collect air and throttle the system or lead to uneven pumping.

Correct

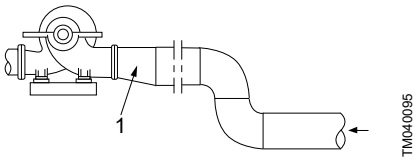

Correctly mounted inlet pipe

Pos.	Description
1	Eccentric reducer

Wrong

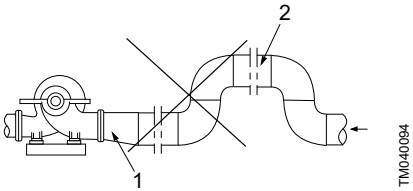

Inlet pipe resulting in air pockets

Pos.	Description
1	Eccentric reducer
2	Air pocket

3.5.5 Inlet pipe with a horizontal elbow in the feed line

Make sure that the liquid flow is evenly distributed to both sides of the double-suction impeller.

There is always an uneven, turbulent flow through an elbow. See figure below. If you install an elbow in the inlet pipe near the pump in a position other than vertical, more liquid will enter one side of the impeller than the other. This will result in heavy, unbalanced thrust loads overheating the bearings, causing rapid wear and reducing the hydraulic performance.

Correct

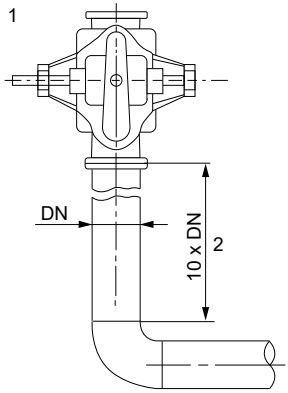

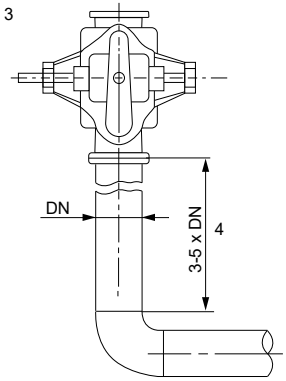

Recommended inlet pipe installation with a length of straight pipe between horizontal elbow and pump

Pos.	Description
1	Open system
2	≥ 10 x DN plus expansion joint
3	Closed system
4	3-5 x DN plus expansion joint

Wrong

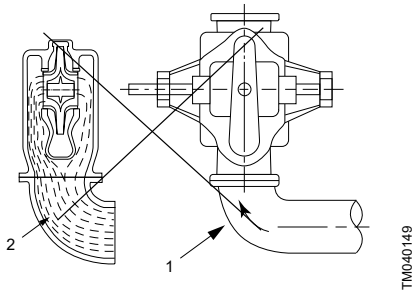

Unbalanced loading of a double-suction impeller due to uneven flow through a horizontal elbow close to the pump

Pos.	Description
1	Uneven flow
2	Water pressure increases here causing a greater flow to one side of the impeller than to the other

3.5.6 Installations with vertical inlet pipe in confined space

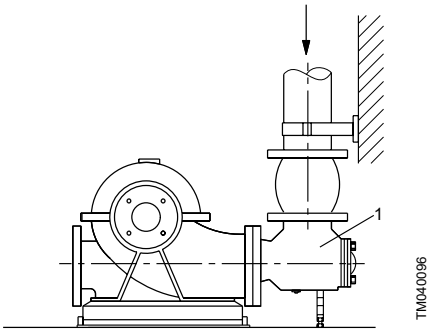

Inlet diffuser (1) in the inlet pipe

4. Starting up the product

4.1 General information

Do not start the pump until it has been filled with liquid and vented.

CAUTION
Biological hazard
Minor or moderate personal injury

- When pumping drinking water, the pump must be flushed thoroughly with clean water before startup in order to remove any foreign matters, such as preservatives, test liquid or grease.

4.1.1 Pumps with stuffing box

In the case of pumps with stuffing box, check that the stuffing box gland is correctly fitted. It must be possible to turn the pump shaft manually. If the pump has been inactive for a long period, turn it manually to make sure it has not got stuck. Loosen the stuffing box or remove the packing.

4.1.2 Flushing the pipe system

The pump is not designed to pump liquids containing solid particles such as pipe debris and welding slag. Before starting up the pump, the pipe system must be thoroughly cleaned, flushed and filled with clean water.

The warranty does not cover any damage caused by flushing the pipe system by means of the pump.

The startup procedure for the pumps has four steps:

1. Prestart checks. See section Prestart checks.
2. Priming. See section Priming.
3. Starting. See section Startup.
4. Final alignment. See section Alignment.

Only start the pump when you have gone through all of the prestart checks.

Related information

4.2 Prestart checks
4.3 Priming
4.4 Startup
4.5 Final alignment

4.2 Prestart checks

Prestart checks have four steps:

1. Bearings
2. Stuffing boxes
3. Pressure gauge
4. Direction of rotation.

4.2.1 Bearings

Make sure that all bearings are properly lubricated. See section Lubrication.

Related information

6.3.3 Lubrication

4.2.2 Stuffing boxes

Make sure that the stuffing box packing rings have been properly tightened.

This does not apply to pumps with mechanical shaft seals.

4.2.3 Pressure gauges

Make sure that the pressure gauge connections are closed.

4.2.4 Direction of rotation

Check the direction of rotation in the following way:

1. Remove the coupling guard.
2. Disconnect the two coupling halves between pump and motor.
3. Make sure that the motor shaft can turn freely.
4. Start the motor briefly to check the direction of rotation. The correct direction of rotation is indicated by the arrows on the pump casing.

   The direction of rotation of the pump is not always the same as the flow direction.

5. If the direction of rotation is wrong, correct it by interchanging two phases on the motor.

   DANGER
   Electric shock
   Death or serious personal injury

   - Before interchanging two phases, make sure that the power supply has been switched off and that it cannot be accidentally switched on.

6. Check the direction of rotation again.
7. Reassemble the coupling and the guards.

4.3 Priming

If not primed properly, the pump will not deliver liquid.

Closed systems or open systems where the liquid level is above the pump inlet (flooded systems)

Fill the inlet pipe and pump with liquid and vent them before the pump is started. Proceed as follows:

1. Close the outlet isolating or throttle valve.
2. Loosen the vent screw (17) and the plug for shaft seal flushing (20d).

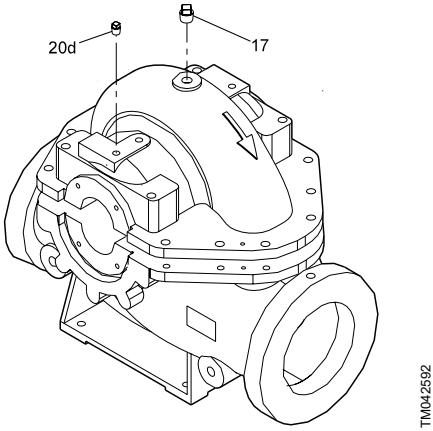

Position of the vent valve and plug for shaft seal flushing

WARNING
Hot or cold surface
Death or serious personal injury

- Pay attention to the direction of the vent hole, and ensure that the escaping water does not cause injury to persons or damage to the motor or other components.
- In hot-water installations, pay special attention to the risk of injury caused by scalding hot water and hot surfaces.
- In cold-liquid installations, pay special attention to the risk of injury caused by cold liquids and cold surfaces.

3. Slowly open the isolating valve in the inlet pipe until a steady flow of liquid runs out of the vent hole.
4. Rotate the shaft by hand, if possible, while priming and venting to free entrapped air from the impeller channels.
5. Tighten the vent screw and completely open the isolating or throttle valve(s).

Open systems where the liquid level is below the pump inlet (suction lift systems)

Fill the inlet pipe and pump with liquid and vent them before the pump is started. Proceed as follows:

Suction lift system with foot valve

1. Close the outlet isolating or throttle valve and open the isolating valve in the inlet pipe.
2. Remove the vent screw and connect a priming device to a drain hole.
3. Fill the inlet pipe and casing with liquid at a pressure of 1 to 2 bar from an external source until the inlet pipe and pump are completely filled with liquid.
4. Rotate the shaft by hand while priming and venting to free entrapped air from the impeller channels.
5. Refit the vent screw and tighten it securely.
6. You can fill the inlet pipe with liquid and vent it before you connect the pipe to the pump. You can also install a priming device before the pump.

Suction lift system without foot valve

1. Connect an external vacuum pump to the vent hole on the top of the pump casing.
2. Close the outlet isolating or throttle valve and open the isolating valve in the inlet pipe.
3. Open the valves between the pump and vacuum pump.
4. Start the external vacuum pump.
5. Pump until the inlet pipe and the pump are completely filled with liquid.
6. Rotate the shaft by hand while priming and venting to free entrapped air from the impeller channels.
7. When the liquid runs out of the vacuum pump, stop the external vacuum pump and close the valves between the pump and vacuum pump.

Never let the pump run dry. The pump is not self-priming.

Dry-running will cause serious damage to the stuffing boxes, shaft seals, wear rings and shaft sleeves.

4.3.1 Opening of valves

1. Open the valves for the flushing liquid to the stuffing boxes.
2. Completely open the isolating valve on the inlet side of the pump and leave the outlet isolating or throttle valve partly open.

4.4 Startup

Make sure that the pump is filled with liquid. The pump must not run dry. Dry-running will cause serious damage to the stuffing boxes, shaft seals, wear rings and shaft sleeves.

1. Start the pump.
2. **WARNING**
   Hot or cold surface
   Death or serious personal injury
   - Pay attention to the direction of the vent hole, and ensure that the escaping water does not cause injury to persons or damage to the motor or other components.
   - In hot-water installations, pay special attention to the risk of injury caused by scalding hot water and hot surfaces.
   - In cold-liquid installations, pay special attention to the risk of injury caused by cold liquids and cold surfaces.

   Vent the pump during startup by loosening the vent screw until a steady flow of liquid runs out of the vent hole.
3. When the pipe system has been filled with liquid, slowly open the outlet isolating or throttle valve until it is completely open. Ensure that the differential pressure developed by the pump is within the performance range of the pump and/or close to the designed duty point. Throttle the outlet isolating valve or reduce the speed of the pump if the flow exceeds the rated performance range or the differential pressure is lower than the rated performance range.
4. Ensure the pump unit is operating smoothly without abnormal noise, vibration or overheating.

   Do not allow a stuffing box to run dry, and do not overtighten the stuffing box gland to eliminate leaking as the shaft sleeve will become damaged.

4.5 Final alignment

Make the final alignment by shimming the motor only.

1. Let the pump run until it has reached its operating temperature under normal operating conditions (approximately 1 hour).
2. Stop the pump.
3. Remove the coupling guard.
4. Check the alignment on the coupling by means of ruler or dial gauges or laser.

   The coupling tolerances may differ from coupling make to coupling make. For the standard coupling, the allowable tolerance is ± 0.13 mm. For other coupling types, see the coupling data supplied with the pump.

   WARNING
   Crushing hazard
   Death or serious personal injury
   - To protect persons from rotating machine parts, always install all guards after the installation is complete and before starting the pump.

4.5.1 Aligning the pump and motor with a straightedge ruler

1. Make a rough alignment of pump and motor, and tighten the screws in the base frame to the correct torque.

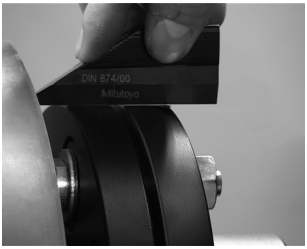

TM038340

See the table Tightening torques.

2. Make a mark on the coupling, for instance with a marker pen.

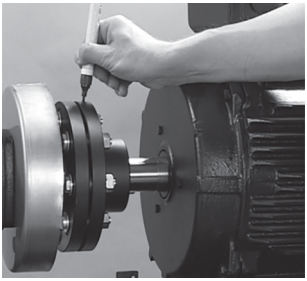

TM082476

3. Hold a straightedge ruler against the coupling, and determine the inaccuracy, if any, with a feeler gauge.

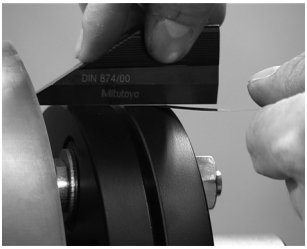

TM038300

4. Turn the coupling 90°, and repeat the measurement with straightedge and feeler gauge.

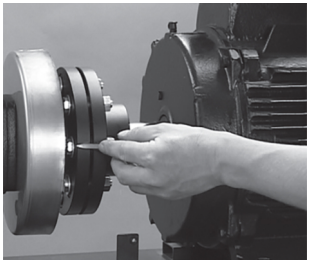

TM082477

- If the measured values are less than 0.13 mm, the alignment is complete. Go to step 8.

5. Adjust the position of the motor. Loosen the screws that hold the motor in place.

TM038321

6. Insert shims with the required thickness.

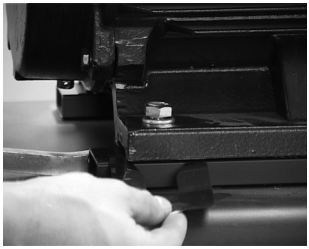

TM038322

7. Tighten the screws to the correct torque. Go to step 3, and check the alignment once more.

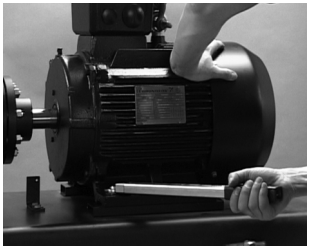

TM038324

8. Check the gap S2 both vertically and horizontally.

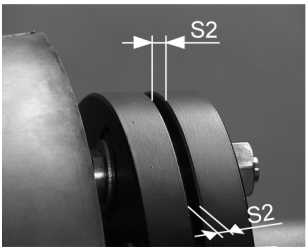

TM038325

- If the air-gap width is within the tolerances, the alignment is complete.
- If not, go to step 6.

See the table Air-gap width S2.

Related information

4.5.4 Tightening torques

4.5.5 Pin coupling air-gap width S2

4.5.2 Aligning the pump and motor with a dial indicator

1. Make a rough alignment of pump and motor, and tighten the screws in the base frame to the correct torque.

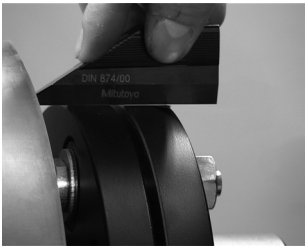

TM038340

See the table Tightening torques.

2. Make a mark on the coupling, for instance with a marker pen.

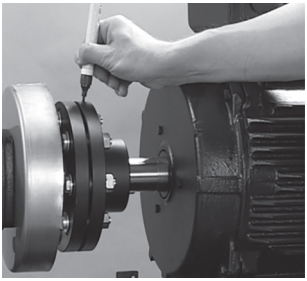

TM082476

3. Fasten a dial indicator to the hub of coupling guard, make sure the dial indicator is on the outer circumference of coupling guard.

TM082486

4. Turn the motor coupling and measure the deviation along circumference on 0°, 90°, 180° and 270°.

TM082487

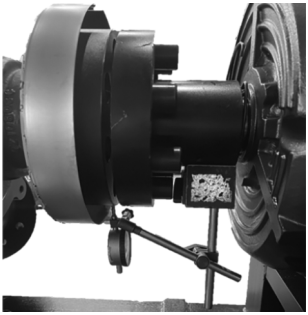

TM082488

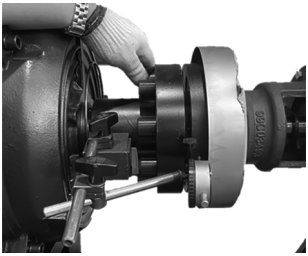

TM082489

5. Adjust the position of the motor. Loosen the screws that hold the motor in place.

TM038321

6. Insert shims with the required thickness.

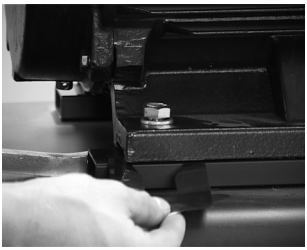

TM038322

7. Tighten the screws to the correct torque. Go to step 3, and check the alignment once more.

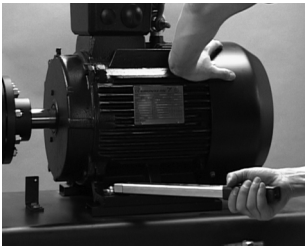

TM038324

8. Check the gap S2 both vertically and horizontally.

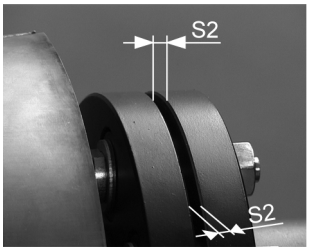

TM038325

- If the air-gap width is within the tolerances, the alignment is complete.
- If not, go to step 6.

See the table Air-gap width S2.

Related information

4.5.4 Tightening torques

4.5.5 Pin coupling air-gap width S2

4.5.3 Aligning the pump and motor with a laser equipment

1. Make a rough alignment of pump and motor, and tighten the screws in the base frame to the correct torque.

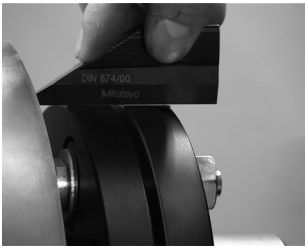

TM038340

See the table Tightening torques.

2. Fasten one laser bracket to the pump coupling.

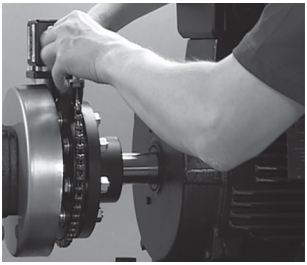

TM082478

3. Fasten the other laser bracket to the motor coupling.

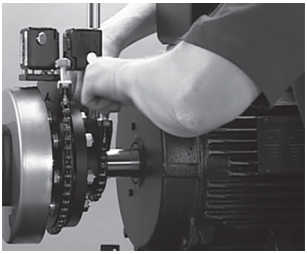

TM082479

4. Place laser unit S, stationary, on the stationary part and laser unit M, movable, on the movable part.

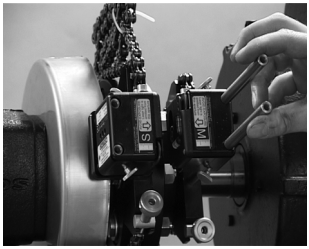

TM038305

5. Interconnect the laser units, and connect one laser unit to the control box.

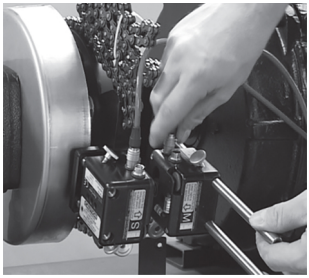

TM082480

6. Make sure that the laser units are at the same height.

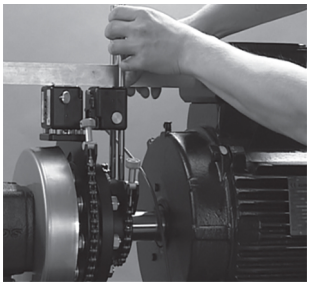

TM082481

7. Measure the distance between the white lines on the laser units.

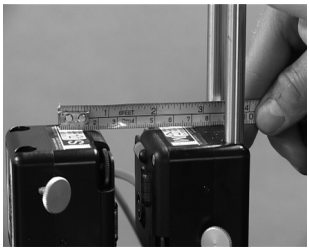

TM038309

8. Enter the distance.

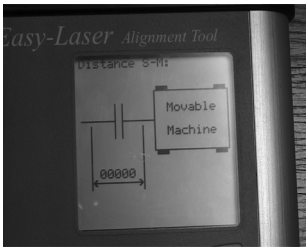

TM038308

9. Measure the distance between the S unit and the centre of the gap between the couplings.

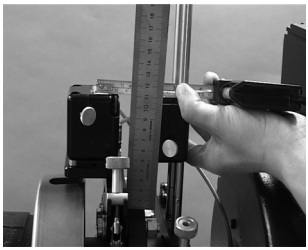

TM038310

10. Enter the distance.

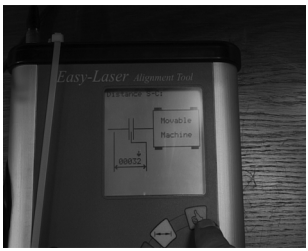

TM038311

11. Measure the distance from the S unit to the first screw on the motor.

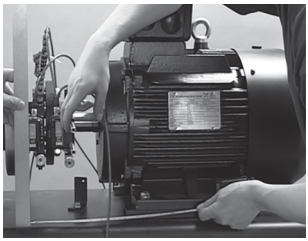

TM082482

12. Enter the distance.

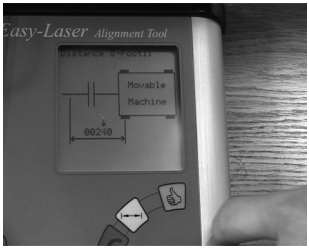

TM038313

13. Measure the distance from the S unit to the rear screw on the motor.

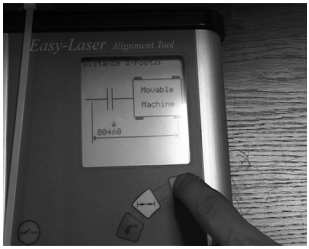

TM038314

14. The control box shows that the laser units must be turned to position 9 o'clock.

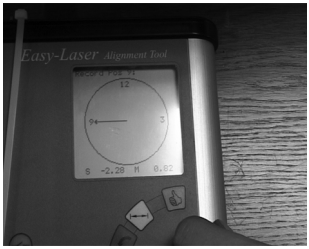

TM038315

15. Turn the laser units to position 9 o'clock.

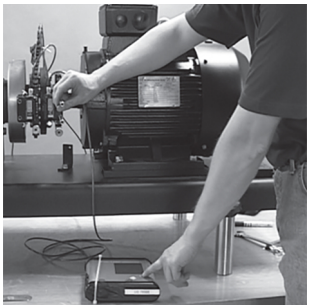

TM082483

16. Confirm on the control box.

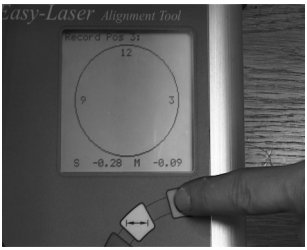

TM038319

17. Turn the laser units to position 12 o'clock. Confirm on the control box.

TM082484

18. Turn the laser units to position 3 o'clock. Confirm on the control box.

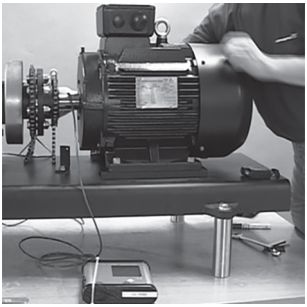

TM082485

19. If the measured values are less than 0.13 mm, the alignment is complete. Go to step 24.

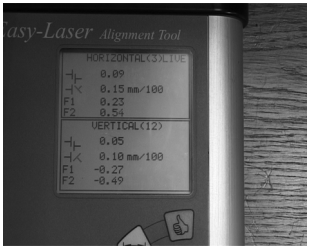

TM038320

20. Loosen the screws that hold the motor in place. Adjust the position of the motor.

TM038321

21. Insert shims with the required thickness.

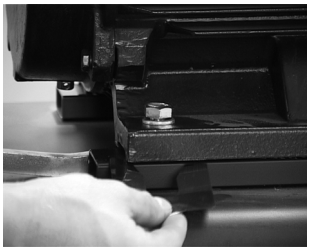

TM038322

22. Tighten the screws to the correct torque again.

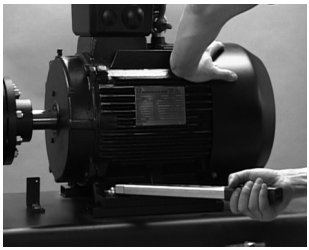

TM038324

23. Repeat the alignment until the values are within the tolerances. Go to step 14.

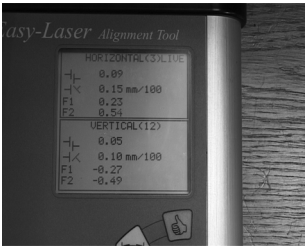

TM038320

24. Check the gap S2.

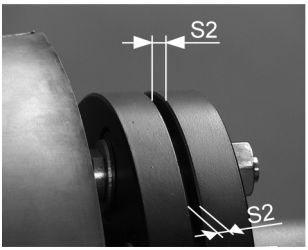

TM038325

See the table Air-gap width S2.

Related information

4.5.4 Tightening torques

4.5.5 Pin coupling air-gap width S2

4.5.4 Tightening torques

Refer to this tightening torques table when align the motor and pump.

Description	Dimensions	Tightening torque [Nm]
Hexagon head screw	M4	3 ± 10 %
	M6	9 ± 10 %
	M8	21 ± 10 %
	M10	41 ± 10 %
	M12	72 ± 10 %
	M14	114 ± 10 %
	M16	177 ± 10 %
	M18	244 ± 10 %
	M20	345 ± 10 %
	M22	470 ± 10 %
	M24	597 ± 10 %

4.5.5 Pin coupling air-gap width S2

Measure S2 all the way around the coupling. The maximum permissible deviation between the largest and the smallest measurement is 0.1 mm.

After the installation is finished, tighten the screws connecting the flange, feet and the anchor bolts according to the tightening torques. Anti-loose method should be applied.

Outside coupling diameter [mm]	Air-gap width S2 [mm]	
	Standard coupling	
	Nominal	Tolerance
90-213	3.2 mm	0/-1
251-270	4.8 mm	0/-1
306-757	6.4 mm	0/-1

If the coupling and motor are not supplied by Grundfos, make sure to follow the coupling manufacturer's instructions.

WARNING
Crushing of hands
Death or serious personal injury

- To protect persons from rotating machine parts, always install all guards after the installation is complete and before starting the pump.

5. Product introduction

5.1 Applications

Grundfos LS horizontal split case pumps are typically used in these applications:

- circulation in heating and air conditioning systems, water condensing and boiler feed systems
- liquid transfer and pressure boosting in various industrial systems
- water distribution and water treatment in public water systems.

5.2 Pumped liquids

Clean, thin, non-aggressive liquids, not containing solid particles or fibres. Do not pump liquids that will attack the pump materials chemically.

CAUTION
Hot Liquid
Minor or moderate personal injury

- Do not exceed the maximum operating temperature stated on the nameplate.

When pumping liquids with a density and/or viscosity higher than that of water, the head and flow will be reduced. Alternatively, use motors with correspondingly higher outputs.

The stuffing box packing rings or mechanical shaft seal O-rings chosen must be suitable for the liquid to be pumped.

Special stuffing box packing rings or shaft seal O-rings may be required if you use the pump for pumping treated water:

- at temperatures above 80 °C (176 °F).
- containing additives to prevent system corrosion, calcareous deposits, etc. (this may be the case in heating and ventilating systems).

When pumping liquids other than water, select an appropriate stuffing box or shaft seal. For further information, contact Grundfos.

5.3 Identification

The type designation and rating information of Grundfos horizontal split case pumps are stated on the nameplate. The type designation includes model number, size and type.

Permanent records for this pump are kept under its serial number production date, and this number must therefore be stated in all correspondence and spare parts orders.

For more information about weight, see the label on the packaging.

5.3.1 Nameplate

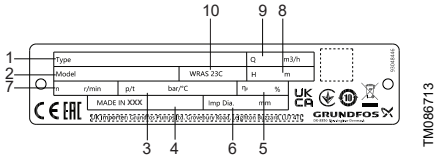

Nameplate of LS pump

Pos.	Description
1	Type
2	Model
3	Pressure rating and maximum temperature
4	Country of production
5	Hydraulic pump efficiency at optimum efficiency point
6	Impeller diameter
7	Speed of rotation [r/min]
8	Pump head at rated flow rate [m]
9	Rated flow rate [m^3/h]
10	Drinking water approval

5.3.2 Type key

Example: LS125-100-305X,(W) 1F1DS BAQE 1											
Pos.	1	2	3	4	5	6	7	8	9	10	11
Example	LS	125	-100	-305x	,(W)	1	F1	D	S	BAQE	1

Pos.	Code	Explanation
1	LS	**Type range** LS: Horizontal version
2	125	**Nominal diameter of inlet port (DN)**
3	-100	**Nominal diameter of outlet port (DN)**
4	-305x	**Maximum impeller diameter [mm]** If suffix "x" is used, the impeller or construction design is different, e.g. A, B, C,...Z. If suffix "x2" is used, the impeller is a double-stage impeller.
5	,(W)	**Drink water code (optional)** ACS or WARS certified pump
6	1	**Pump variant** 1: Grease-lubrication For LS, pump with motor, common base frame and non-spacer coupling For LSV, pump with motor, base frame, motor stool and non-spacer coupling
		2: Grease-lubrication For LS, bare shaft pump with common base frame, non-spacer coupling For LSV, pump with base frame, motor stool and non-spacer coupling
		3: Grease-lubrication For LS, bare shaft pump For LSV, bare shaft pump with base frame
		4: Grease-lubrication For LS, pump with motor, separated base frame and spacer coupling For LSV, pump with motor, base frame, motor stool and spacer coupling
		5: Grease-lubrication For LS, pump with separated base frame and spacer coupling For LSV, pump with base frame, motor stool and spacer coupling
		6: Oil-lubrication LS pump with motor, common base frame and non-spacer coupling
		7: Oil-lubrication LS bare shaft pump with common base frame and non-spacer coupling
		8: Oil-lubrication LS bare shaft pump
		9: Oil-lubrication LS pump with motor, separated base frame and spacer coupling
		A: Oil-lubrication LS pump with separated base frame and spacer coupling
		X: Special variant

Pos.	Code	Explanation	
7	F1	**Pipe connection** F1: 10 bar, DIN PN 10 F2: 16 bar, DIN PN 16 F3: 25 bar, DIN PN 25 XX: Special flange	G1: 175PSI(12 bar), ANSI125LB/150LB G2: 250PSI(17.2 bar), ANSI250LB/300LB G3: 400PSI(27.6 bar), ANSI250LB/300LB
8	D	**Code for shaft and sleeve materials** D: SS420 and no sleeve E: SS304 and no sleeve J: SS316 and no sleeve L: Duplex stainless steel and no sleeve X: Special	B: SS420 and bronze A: SS420 and SS304 C: SS420 and SS316 K: Duplex stainless steel and duplex stainless steel Q: Alloy steel and no sleeve M: Alloy steel and bronze N: Alloy steel and SS304

Pos.	Code	Explanation	
9	S	**Code for pump casing and impeller materials**	
		B: Cast iron and bronze	A: Ductile iron and bronze
		S: Cast iron and SS304	Q: Ductile iron and SS304
		C: Cast iron and SS316	G: Ductile iron and SS316
		D: Cast iron and duplex stainless steel	H: Ductile iron and duplex stainless steel
		U: SS304 and SS304	J: SS316 and SS316
		K: Duplex stainless steel and duplex stainless steel	E: Cast steel and SS304
		X: Special	F: Cast steel and SS316
10	BAQE	**Code for shaft seals or stuffing box**	
		BAQE : Rubber bellows unbalance seal, carbon [2], SiC, EPDM	
		AAQE : O-ring unbalance seal, carbon [2], SiC, EPDM	
		DAQE : O-ring balance seal, carbon [2], SiC, EPDM	
		SAQE : Rubber bellows balance seal, carbon [2], SiC, EPDM	
		BBQE : Rubber bellows unbalance seal, carbon, SiC, EPDM	
		ABQE : O-ring unbalance seal, carbon, SiC, EPDM	
		DBQE : O-ring balance seal, carbon, SiC, EPDM	
		SBQE : Rubber bellows balance seal, carbon, SiC, EPDM	
		BQQE : Rubber bellows unbalance seal, SiC, SiC, EPDM	
		AQQE : O-ring unbalance seal, SiC, SiC, EPDM	
		DQQE : O-ring balance seal, SiC, SiC, EPDM	
		SQQE : Rubber bellows balance seal, SiC, SiC, EPDM	
		BBVP: Rubber bellows seal, carbon, aluminium oxide, nitrile rubber	
		SNEK: Stuffing box with synthetic polymer packing rings, uncooled, with internal barrier fluid	
		BAQV: Rubber bellows unbalance seal, carbon [2], SiC, FKM	
		AAQV: O-ring unbalance seal, carbon [2], SiC, FKM	
		DAQV: O-ring balance seal, carbon [2], SiC, FKM	
		SAQV: Rubber bellows balance seal, carbon [2], SiC, FKM	
		BBQV: Rubber bellows unbalance seal, carbon, SiC, FKM	
		ABQV: O-ring unbalance seal, carbon, SiC, FKM	
		DBQV: O-ring balance seal, carbon, SiC, FKM	
		SBQV: Rubber bellows balance seal, carbon, SiC, FKM	
		BQQV: Rubber bellows unbalance seal, SiC, SiC, FKM	
		AQQV: O-ring unbalance seal, SiC, SiC, FKM	
		DQQV: O-ring balance seal, SiC, SiC, FKM	
		SQQV: Rubber bellows balance seal, SiC, SiC, FKM	
11	1	**Direction of rotation**	
		(Pump direction of rotation as seen from motor end)	
		1 Clockwise	
		2 Counterclockwise	

[2] Antimony, not approved for potable water.

The example shown is an LS 125-100-305F/273.1, standard type with standard coupling, DIN PN 16 flange, cast iron pump casing with SS304 impeller, BBQE mechanical shaft seal and clockwise direction of rotation.

6. Servicing the product

6.1 Contaminated pumps

CAUTION
Biological hazard
Minor or moderate personal injury

- Flush the pump thoroughly with water and rinse the pump parts in water after dismantling.

The product will be classified as contaminated if it has been used for a liquid which is injurious to health or toxic.

If you request Grundfos to service the product, contact Grundfos with details about the liquid before returning the product for service. Otherwise, Grundfos can refuse to accept the product for service.

Any application for service must include details about the liquid.

Clean the product in the best possible way before you return it.

Costs of returning the product are to be paid by the customer.

6.2 Operating checks

Warning
The sound pressure level is so high that hearing protection must be used.

1. Check the pump and pipes for leaks.
2. Check and record the pressure gauge readings for future reference.
3. Check the differential pressure. If the differential pressure is lower than anticipated, the motor may be overloaded. See description of measuring instruments in section Measuring instruments.
4. Measure the motor current consumption and compare the result with the rated current stated on the motor nameplate. In case of overload, throttle the outlet isolating or throttle valve until the motor is no longer overloaded.
5. Check the bearings for lubrication and temperature. Normal temperature is 70 °C (158 °F). The maximum temperature depends on the type of lubrication. See the lubricating plate on the pump.

Stop the pump immediately if you notice any defects.

Do not start the pump unless the defects have been remedied. See section Fault finding the product. Report immediately to the supplier that you cannot remedy the defects.

The operating checks apply both during the startup procedure and when checking the pump during normal operation.

Related information

3.4.6 Measuring instruments
8. Fault finding the product

6.3 Maintaining the product

DANGER
Electric shock
Death or serious personal injury

- Before starting work on the pump, make sure that the power supply has been switched off and that it cannot be accidentally switched on.

WARNING
Hot or cold surface
Death or serious personal injury

- Pay attention to the direction of the vent hole, and ensure that the escaping water does not cause injury to persons or damage to the motor or other components.
- In hot-water installations, pay special attention to the risk of injury caused by scalding hot water and hot surfaces.
- In cold-liquid installations, pay special attention to the risk of injury caused by cold liquids and cold surfaces.

6.3.1 General information

Routine maintenance is essential to maintain the pump in a good condition.

A high degree of cleanliness must be maintained during all maintenance procedures.

Consumable items including spare parts dismantling and re-assembly:

- tools
- re-assembly procedure.

Detailed information is mentioned in service manual.

6.3.2 Frequency of inspections

Carry out inspections in accordance with the maintenance table below.

Depending on operating and environmental conditions together with a comparison of previous inspections, the frequency of inspections may be altered to maintain satisfactory operation of the pump.

Every week	• Visually check for leaks. • Check for vibrations. • Hand test the bearing housing for any signs of temperature rise. • Check if the leakage of the stuffing box meets the standards, see on section Startup.
Every month	Check the pump bearing temperature.
Every 6 months	• Check the alignment of the pump and motor. • Check the fixing bolts and tighten, if necessary. • Check the coupling for wear.
Every year	• Check whether the grease in the pump bearings has hardened. • Check the shaft for scores. • Check the rotating assembly for wear. • Check the wear ring clearances.

CAUTION
Sharp element
Minor or moderate personal injury
- Wear protective gloves to protect yourself against sharp edges on the impeller and wear rings.

Between the regular maintenance inspections, be aware of signs of motor or pump problems.

Common symptoms are listed in section Fault finding the product.

Remedy any fault immediately and avoid costly repairs and shutdowns.

Related information

4.4 Startup

8. Fault finding the product

6.3.3 Lubrication

Pump bearings

Re-greaseable bearings are packed with grease at our factory prior to shipping. The initial filling of grease is valid for one year or 2,000 hours of normal operation, whichever occurs first. After that, regular grease maintenance must be implemented.

We recommend to use the same type of grease. If need to replace the grease with a new type, please clean up the old grease and then add the new grease.

Grease quantity

Inlet size	Grease quantity [g]
DN 65 to DN 100	11
DN 125 to DN 150	17
DN 200 to DN 300	25
DN 350 to DN 450	50

1. Remove four cap screws and bearing cap to access to the bearing.
2. Clean up the old grease thoroughly on the bearing with a clean cloth.
3. Re-pack the bearing with sufficient grease to completely fill and cover the balls inside the bearing.
4. Rotate the pump shaft to ensure even and complete lubrication.
5. For drive end bearing maintenance, loose and slide the bearing cap to leave enough space, then visually inspect the bearing for grease.
6. Proceed from step 1 to step 4. If you cannot access to the bearing by moving the bearing cap, you need to remove the coupling hub.
7. Install the bearing caps back when the lubrication is done.

Grease specifications: See Ball bearing grease below.

Do not overgrease.

Too much grease can cause overheating and premature bearing failure.

The bearing manufacturers recommend to fill up 1/3 of the bearing with grease. After filling the grease, rotate the pump shaft so the grease will cover the balls in the bearing.

Ball bearing grease

Manufacturer	Lubricant
KYODO YUSHI	MULTEMP SRL [3)]
Shell	Dolium R
Exxon	Polyrex
Chevron	SRI grease NLGI 2
	Black pearl NLGI 2
Philips	Polytac
Texaco	Polystar RB

3) Grundfos recommends KYODO YUSHI MULTEMP SRL grease for relubrication.

Motor bearings

Lubricate the motor bearings in accordance with the indications on the motor nameplate.

7. Taking the product out of operation

The following shutdown procedures apply to most normal shutdowns. If the pump is to be inoperative for a long time, follow the storage procedures in section Long-term shutdown.

1. Always close the outlet or throttle valve before stopping the pump. Close the valve slowly to prevent hydraulic shock, but make sure that the pump does not run against a closed valve for more than a few seconds.
2. Switch off the power supply to the motor.

Related information

7.2 Long-term shutdown

7.1 Short-term shutdown

1. For overnight or temporary shutdown periods under non-freezing conditions, the pump may remain filled with liquid. Make sure the pump is fully primed before restarting.
2. For short or frequent shutdown periods at temperatures below 0 °C, keep the liquid moving within the pump casing and insulate or heat the pump exterior to prevent freezing.

7.2 Long-term shutdown

For long shutdown periods or to isolate the pump for maintenance, close the inlet and outlet valves. If no inlet valve is fitted and the pump has positive inlet height, drain all liquid from the inlet pipe to terminate the liquid flow into the pump inlet port. If applicable, turn off any external source of cooling or lubricating liquid to the stuffing boxes or shaft seals. Remove the plugs in the pump drain and vent tappings, as required, and drain all liquid from the pump casing. Remove the stuffing box glands and packing rings, if applicable.

CAUTION
Hot or cold surface
Minor or moderate personal injury

- Make sure that the escaping water does not cause injury to persons or damage to the motor or other components.

- In hot-water installations, pay special attention to the risk of injury caused by scalding hot water.
- In cold-liquid installations, pay special attention to the risk of injury caused by cold liquids and cold surfaces.

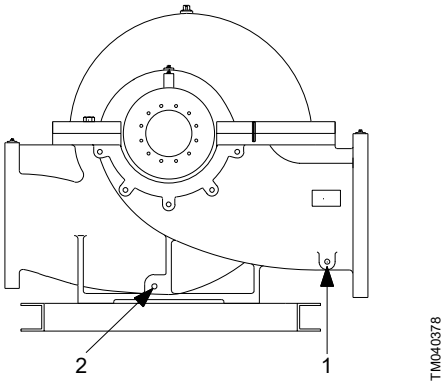

Example of drain plugs

Pos.	Description
1	Drain plug, inlet port
2	Drain plug, pump casing and outlet port

1. **WARNING**
   Harm to health
   Death or serious personal injury
   - Do not use antifreeze solution if you use the pump for public or potable-water supply.

   After draining the pump during long shutdown periods under freezing conditions, blow out all liquid in passages and air pockets using compressed air. You can prevent freezing of pumped liquid by filling the pump with antifreeze solution.

2. Rotate the shaft by hand monthly to coat the bearings with lubricant and delay oxidation and corrosion.

3. Where applicable, follow the motor manufacturer's storage recommendations.

   Do not tighten the vent screw or refit the drain plug until the pump is to be used again.

8. Fault finding the product

DANGER
Electric shock
Death or serious personal injury

- Before you remove the terminal box cover and before you remove or dismantle the pump, make sure that the power supply has been switched off and that it cannot be accidentally switched on.

8.1 The pump delivers no liquid

Cause	Remedy
The pump is not primed, lack of priming liquid, incomplete priming.	• Fill the pump and inlet pipe completely with pumped liquid.
Loss of priming liquid.	• Mend possible leaks in the inlet pipe, joints and fittings. Vent the pump housing to remove accumulated air.
The suction lift or static lift is too high.	• Reduce the difference in height between the water reservoir or water supply and the pump.
The outlet pressure is too high.	• Make sure that valves in the outlet pipe are fully open. • For parallel operation, this indicates that the outlet pressure is higher than designed friction losses in the pipes. Review system design and actual pressure developed in the system with parallel operation.
The speed is too low.	1. Make sure that the motor receives full voltage. 2. Make sure that the frequency is correct. 3. Make sure that all phases are connected.
Wrong direction of rotation.	• Compare the direction of rotation with the directional arrow on the pump housing. If required, change the direction of rotation by interchanging two phases in the motor.
The impeller is completely clogged.	• Dismantle the pump and clean the impeller.

8.2 The pump does not deliver enough liquid

Cause	Remedy
The suction lift or static lift is too high.	• Reduce the difference in height between the water reservoir or water supply and the pump.
The outlet pressure is too high.	• Make sure that valves in the outlet pipe are fully open. • For parallel operation, this indicates that the outlet pressure is higher than designed friction losses in the pipes. Review system design and actual pressure developed in the system with parallel operation.
The speed is too low.	1. Make sure that the motor receives full voltage.

Cause	Remedy
	2. Make sure that the frequency is correct. 3. Make sure that all phases are connected.
Wrong direction of rotation.	• Compare the direction of rotation with the directional arrow on the pump housing. If required, change the direction of rotation by interchanging two phases in the motor.
The impeller is completely clogged.	• Dismantle the pump and clean the impeller.
The inlet pipe is partially blocked.	• Remove any obstructions in the inlet pipe.
Air leak in the inlet pipe or flange.	• Replace or repair the defective pipe section or flange.
Air leak in the stuffing box.	• Clean the flushing pipe. Replace the stuffing box packing rings, if necessary.
Cavitation; insufficient NPSH (depending on installation).	1. Increase the net positive suction head by placing the pump in a lower position. 2. Pressurise the inlet vessel.
The impeller or wear rings are worn.	• Replace the impeller and/or wear rings. If necessary, also replace the bearings and the shaft.
Defective packing rings.	• Replace the packing rings.
The non-return valve is too small or partially obstructed.	• Replace or clean the non-return valve.
The non-return valve is too small or partially obstructed.	• Replace or clean the non-return valve.
The inlet pipe is not immersed deeply enough.	• Extend the inlet pipe so that the risk of sucking air is eliminated.

8.3 The pump does not create enough pressure

Cause	Remedy
The speed is too low.	1. Make sure that the motor receives full voltage. 2. Make sure that the frequency is correct. 3. Make sure that all phases are connected.
Air leak in the inlet pipe or flange.	• Replace or repair the defective pipe section or flange.
The impeller or wear rings are worn.	• Replace the impeller and/or wear rings. If necessary, also replace the bearings and the shaft.
Defective packing rings.	• Replace the packing rings.
The impeller diameter is too small.	• Check with Grundfos if you can use a larger impeller. If not, reduce the outlet pipe friction losses. But be careful not to overload the motor.
Obstruction in pump housing.	• Dismantle the pump and remove the obstruction.
Air or gases in the liquid.	• Remove the gas or air from the pumped liquid.

Cause	Remedy
	• See remedy in Cavitation; insufficient NPSH (depending on installation) above.
The actual duty point of the pump lies to the right of the specified duty point on the pump curve. The result is lower head, higher flow and higher power consumption.	• Install an orifice plate immediately after the outlet flange. The orifice plate will raise the system characteristic or increase the counterpressure thus increasing the head and lowering the flow. The size of the orifice plate must be adapted so that the pressure corresponds to the required duty point.

8.4 The pump loses liquid after running for a short time

Cause	Remedy
The suction lift or static lift is too high.	• Reduce the difference in height between the water reservoir or water supply and the pump.
Air leak in the inlet pipe or flange.	• Replace or repair the defective pipe section or flange.
Air leak in the stuffing box.	• Clean the flushing pipe. Replace the stuffing box packing rings, if necessary.
Cavitation; insufficient NPSH (depending on installation).	1. Increase the net positive suction head by placing the pump in a lower position. 2. Pressurise the inlet vessel.
The inlet pipe is not immersed deeply enough.	• Extend the inlet pipe so that the risk of sucking air is eliminated.
Air or gases in the liquid.	• Remove the gas or air from the pumped liquid. • See remedy in Cavitation; insufficient NPSH (depending on installation) above.

8.5 The pump consumes too much power

Cause	Remedy
Cavitation; insufficient NPSH (depending on installation).	1. Increase the net positive suction head by placing the pump in a lower position. 2. Pressurise the inlet vessel.
The impeller or wear rings are worn.	• Replace the impeller and/or wear rings. If necessary, also replace the bearings and the shaft.
Air or gases in the liquid.	• Remove the gas or air from the pumped liquid. • See remedy in Cavitation; insufficient NPSH (depending on installation) above.
The actual duty point of the pump lies to the right of the specified duty point on the pump curve. The result is lower head, higher flow and higher power consumption.	• Install an orifice plate immediately after the outlet flange. The orifice plate will raise the system characteristic or increase the counterpressure thus increasing the head and lowering the flow. The size of the orifice plate must be adapted so that the pressure corresponds to the required duty point.
The viscosity or specific gravity of the pumped liquid is higher than that of water.	• Use a larger motor. Consult Grundfos for recommended size. • Test the liquid for viscosity and specific gravity.

Cause	Remedy
The shaft is bent due to damage.	• Check the deflection of the shaft. The total indicator runout must not exceed 0.05 mm. • Possibly replace the shaft.
Mechanical failure of bearing and/or impeller.	• Check the bearings and the impeller for damage. • Replace the bearings or the impeller, if necessary.
Misalignment.	• Realign the pump and the motor.
Electrical defects.	• Check that the voltage and frequency of the power supply are correct. • Remedy the possible defects in the motor. • Check that the motor is properly cooled.
The speed is too high.	• Check that the frequency of the power supply corresponds to the frequency stated on the motor nameplate.

8.6 The motor is overloaded

Cause	Remedy
The viscosity or specific gravity of the pumped liquid is higher than that of water.	• Use a larger motor. Consult Grundfos for recommended size. • Test the liquid for viscosity and specific gravity.
The shaft is bent due to damage.	• Check the deflection of the shaft. The total indicator runout must not exceed 0.05 mm. • Possibly replace the shaft.
Mechanical failure of bearing and/or impeller.	• Check the bearings and the impeller for damage. • Replace the bearings or the impeller, if necessary.
Electrical defects.	• Check that the voltage and frequency of the power supply are correct. • Remedy the possible defects in the motor. • Check that the motor is properly cooled.
The speed is too high.	• Check that the frequency of the power supply corresponds to the frequency stated on the motor nameplate.

8.7 Vibrations

Cause	Remedy
The shaft is bent due to damage.	• Check the deflection of the shaft. The total indicator runout must not exceed 0.05 mm. • Possibly replace the shaft.
Mechanical failure of bearing and/or impeller.	• Check the bearings and the impeller for damage. • Replace the bearings or the impeller, if necessary.
Misalignment.	• Realign the pump and the motor.
The foundation is not rigid enough.	

Cause	Remedy
	• Retighten the anchor bolt nuts. Make sure that the foundation is made according to the installation and operating instructions.

8.8 Cavitation noise

Cause	Remedy
Air leak in the inlet pipe or flange.	• Replace or repair the defective pipe section or flange.
Cavitation; insufficient NPSH (depending on installation).	1. Increase the net positive suction head by placing the pump in a lower position. 2. Pressurise the inlet vessel.
The inlet pipe is not immersed deeply enough.	• Extend the inlet pipe so that the risk of sucking air is eliminated.
Air or gases in the liquid.	• Remove the gas or air from the pumped liquid. • See remedy in Cavitation; insufficient NPSH (depending on installation) above.
The speed is too high.	• Check that the frequency of the power supply corresponds to the frequency stated on the motor nameplate.

8.9 The pump bearings are overheated

Cause	Remedy
The shaft is bent due to damage.	• Check the deflection of the shaft. The total indicator runout must not exceed 0.05 mm. • Possibly replace the shaft.
Mechanical failure of bearing and/or impeller.	• Check the bearings and the impeller for damage. • Replace the bearings or the impeller, if necessary.
Misalignment.	• Realign the pump and the motor.
The lubricating oil or grease is dirty or contaminated.	• Clean the bearings and bearing housings according to the instructions and relubricate the bearings.

8.10 The pump operates for a short time and then stops

Cause	Remedy
The pump is not primed, lack of priming liquid, incomplete priming.	• Fill the pump and inlet pipe completely with pumped liquid.
The suction lift or static lift is too high.	• Reduce the difference in height between the water reservoir or water supply and the pump.
Air leak in the inlet pipe or flange.	• Replace or repair the defective pipe section or flange.
Air leak in the stuffing box.	• Clean the flushing pipe. Replace the stuffing box packing rings, if necessary.

9. Technical data

9.1 Operating conditions

9.1.1 Ambient temperature and altitude

The ambient temperature and the installation altitude are important factors for the motor life as they affect the life of the bearings and the insulation system.

Ambient temperature must not exceed +40 °C.

If the ambient temperature exceeds +40 °C or the motor is installed more than 1000 m above sea level, the motor must not be fully loaded due to the low density and consequently low cooling effect of the air.

In such cases, it may be necessary to use a motor with a higher output.

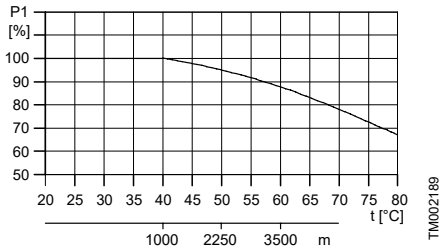

Relationship between motor output (P_2) and ambient temperature

Example

The upper figure shows that the load of the motor must be reduced to 88 % when installed 3500 m above sea level. At an ambient temperature of 70 °C, the motor load must be reduced to 78 % of the rated output.

In cases where both the maximum temperature and the maximum altitude are exceeded, the derating factors must be multiplied (0.88 x 0.78 = 0.69).

9.1.2 Liquid temperature

The maximum liquid temperature marked on the pump nameplate depends on the mechanical shaft seal used:

Temperature range for NBR:	0-100 °C
Temperature range for FKM:	15-100 °C

9.1.3 Pressure in the pump

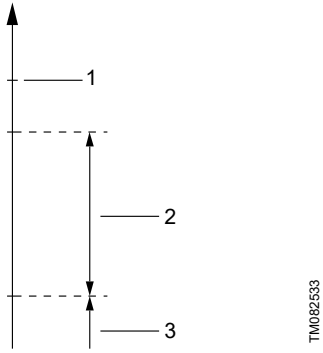

Pressure in the LS pump

Pos.	Description
1	Pressure p stated on the pump (pressure above atmospheric pressure)
2	Pump pressure
3	Inlet pressure

Maximum outlet pressure

The maximum outlet pressure is the pressure (p) stated on the pump nameplate.

Minimum inlet pressure

The minimum inlet pressure must correspond to the NPSH curve for the pump + a safety margin of minimum 0.5 metres head.

NPSH appears from the data booklet and Grundfos Product Centre.

Maximum inlet pressure

The inlet pressure + pump pressure must be lower than the maximum pressure (p) of the pump. This is stated on the nameplate. See section Nameplate.

Related information

5.3.1 Nameplate

9.1.4 Flow rate

Minimum flow rate

The pump must not run against a closed outlet valve as this will cause an increase in the temperature or formation of steam in the pump. This may cause shaft damage, impeller erosion, short life of bearings, damage to stuffing boxes or mechanical shaft seals due to stress or vibration.

The continuous flow rate must be at least 25 % of the flow rate in the best efficiency point.

Maximum flow rate

The maximum flow rate must not exceed the value stated on the nameplate. If the maximum flow rate is exceeded, cavitation and overload may occur.

Operating at reduced flow and/or head

Do not operate the pump at a flow rate below 10 % of the maximum flow rate stated on the nameplate or with the outlet isolating or throttle valve closed. Operating the pump under such conditions may involve the risk of the pump being overheated. To prevent possible damage, use protective devices such as liquid temperature relay, bearing temperature relay, inlet pressure monitoring, etc.

If a pump is operated at reduced head, the flow rate will increase and the motor will consume more current than normal. This will result in overheating of the motor. In such situations, throttle the valve on the outlet side instead. If an automatic throttle valve is installed, this can be done automatically.

9.1.5 Frequency of starts and stops

The recommended maximum number of starts is 3 per hour for complete pumps with a motor supplied by Grundfos.

9.2 Flange forces and torques

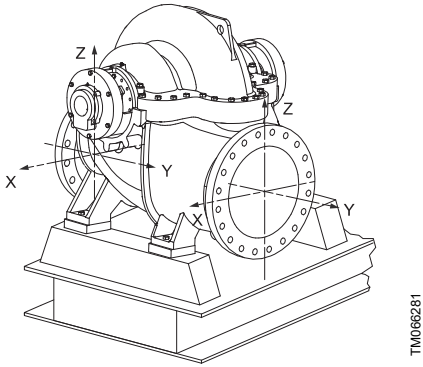

Flange forces and torques

Horizontal pump, side branch, y-axis

If not all loads reach the maximum permissible value, one of the values is allowed to exceed the normal limit. Contact Grundfos for further information.

Casting material	Diameter DN	Force [N]				Torque [Nm]			
		Fy	Fz	Fx	ΣF	My	Mz	Mx	ΣM
Gray cast iron, ductile iron	50	647	530	589	1020	294	338	412	603
Gray cast iron, ductile iron	65	840	676	747	1312	406	469	573	843
Gray cast iron, ductile iron	80	981	804	883	1550	338	383	471	692
Gray cast iron, ductile iron	100	1315	1059	1177	2060	368	427	515	765
Gray cast iron, ductile iron	125	1623	1311	1453	2542	430	497	609	892
Gray cast iron, ductile iron	150	1962	1589	1766	3080	515	603	736	1074
Gray cast iron, ductile iron	200	2629	2119	2354	4101	677	780	956	1413
Gray cast iron, ductile iron	250	3277	2649	2923	5121	927	1074	1310	1928
Gray cast iron, ductile iron	300	3924	3159	3512	6141	1265	1457	1781	2619
Gray cast iron, ductile iron	350	4571	3689	4101	7161	1619	1869	2281	3355
Gray cast iron, ductile iron	400	5219	4218	4689	8182	2031	2340	2855	4208
Gray cast iron, ductile iron	450	5866	4748	5278	9202	2502	2884	3517	5180
Gray cast iron, ductile iron	500	6514	5278	5866	10222	3017	3473	4253	6269
Gray cast iron, ductile iron	550	7161	5808	6455	11242	3590	4135	5033	7446
Gray cast iron, ductile iron	600	7809	6337	7044	12263	4238	4885	5945	8800
Gray cast iron, ductile iron	700	9131	7396	8222	14327	5673	6533	7952	11775
Gray cast iron, ductile iron	800	10437	8455	9400	16376	7331	8441	10270	15220
Gray cast iron, ductile iron	900	11743	9513	10577	18426	9211	10603	12896	19124
Gray cast iron, ductile iron	1000	13048	10571	11754	20475	11312	13019	15830	23489
Gray cast iron, ductile iron	1200	15660	12688	14109	24574	16177	18616	22623	33597
Stainless steel	50	1619	1324	1472	2551	981	1128	1373	2011
Stainless steel	65	2100	1690	1867	3280	1015	1173	1432	2108
Stainless steel	80	2453	2011	2207	3875	1128	1275	1570	2305
Stainless steel	100	3286	2649	2943	5150	1226	1422	1717	2551

Casting material	Diameter DN	Force [N]				Torque [Nm]			
		Fy	Fz	Fx	ΣF	My	Mz	Mx	ΣM
Stainless steel	125	4058	3278	3633	6355	1433	1657	2029	2973
Stainless steel	150	4905	3973	4415	7701	1717	2011	2453	3581
Stainless steel	200	6573	5297	5886	10251	2256	2600	3188	4709
Stainless steel	250	8191	6622	7308	12802	3090	3581	4365	6426
Stainless steel	300	9810	7897	8780	15353	4218	4856	5935	8731
Stainless steel	350	11429	9221	10251	17903	5396	6229	7603	11183
Stainless steel	400	13047	10546	11723	20454	6769	7799	9516	14028
Stainless steel	450	14666	11870	13194	23004	8339	9614	11723	17266
Stainless steel	500	16285	13194	14666	25555	10055	11576	14175	20895
Stainless steel	550	17903	14519	16137	28106	11968	13783	16775	24819
Stainless steel	600	19522	15843	17609	30656	14126	16285	19816	29332
Stainless steel	700	22828	18491	20556	35816	18909	21776	26508	39250
Stainless steel	800	26092	21137	23499	40940	24437	28135	34233	50733
Stainless steel	900	29356	23782	26442	46064	30702	35343	42986	63748
Stainless steel	1000	32621	26428	29385	51188	37705	43398	52766	78296
Stainless steel	1200	39149	31720	35272	61435	53923	62052	75409	111991

10. Disposing of the product

This product or parts of it must be disposed of in an environmentally sound way.

1. Use the public or private waste collection service.
2. If this is not possible, contact the nearest Grundfos company or service workshop.

The crossed-out wheelie bin symbol on a product means that it must be disposed of separately from household waste. When a product marked with this symbol reaches its end of life, take it to a collection point designated by the local waste disposal authorities. The separate collection and recycling of such products will help protect the environment and human health.

See also end-of-life information at *www.grundfos.com/product-recycling*.

Argentina
Bombas GRUNDFOS de Argentina S.A.
Ruta Panamericana km. 37.500industin
1619 - Garín Pcia. de B.A.
Tel.: +54-3327 414 444
Fax: +54-3327 45 3190

Australia
GRUNDFOS Pumps Pty. Ltd.
P.O. Box 2040
Regency Park
South Australia 5942
Tel.: +61-8-8461-4611
Fax: +61-8-8340-0155

Austria
GRUNDFOS Pumpen Vertrieb
Ges.m.b.H.
Grundfosstraße 2
A-5082 Grödig/Salzburg
Tel.: +43-6246-883-0
Fax: +43-6246-883-30

Belgium
N.V. GRUNDFOS Bellux S.A.
Boomsesteenweg 81-83
B-2630 Aartselaar
Tel.: +32-3-870 7300
Fax: +32-3-870 7301

Bosnia and Herzegovina
GRUNDFOS Sarajevo
Zmaja od Bosne 7-7A
BiH-71000 Sarajevo
Tel.: +387 33 592 480
Fax: +387 33 590 465
www.ba.grundfos.com
E-mail: grundfos@bih.net.ba

Brazil
BOMBAS GRUNDFOS DO BRASIL
Av. Humberto de Alencar Castelo
Branco, 630
CEP 09850 - 300
São Bernardo do Campo - SP
Tel.: +55-11 4393 5533
Fax: +55-11 4343 5015

Bulgaria
Grundfos Bulgaria EOOD
Slatina District
Iztochna Tangenta street no. 100
BG - 1592 Sofia
Tel.: +359 2 49 22 200
Fax: +359 2 49 22 201
E-mail: bulgaria@grundfos.bg

Canada
GRUNDFOS Canada inc.
2941 Brighton Road
Oakville, Ontario
L6H 6C9
Tel.: +1-905 829 9533
Fax: +1-905 829 9512

China
GRUNDFOS Pumps (Shanghai) Co. Ltd.
10F The Hub, No. 33 Suhong Road
Minhang District
Shanghai 201106 PRC
Tel.: +86 21 612 252 22
Fax: +86 21 612 253 33

Columbia
GRUNDFOS Colombia S.A.S.
Km 1.5 vía Siberia-Cota Conj. Potrero
Chico,
Parque Empresarial Arcos de Cota Bod.
1A.
Cota, Cundinamarca
Tel.: +57(1)-2913444
Fax: +57(1)-8764586

Croatia
GRUNDFOS CROATIA d.o.o.
Buzinski prilaz 38, Buzin
HR-10010 Zagreb
Tel.: +385 1 6595 400
Fax: +385 1 6595 499
www.hr.grundfos.com

Czech Republic
GRUNDFOS Sales Czechia and Slovakia
s.r.o.
Čajkovského 21
779 00 Olomouc
Tel.: +420-585-716 111

Denmark
GRUNDFOS DK A/S
Martin Bachs Vej 3
DK-8850 Bjerringbro
Tel.: +45-87 50 50 50
Fax: +45-87 50 51 51
E-mail: info_GDK@grundfos.com
www.grundfos.com/DK

Estonia
GRUNDFOS Pumps Eesti OÜ
Peterburi tee 92G
11415 Tallinn
Tel.: + 372 606 1690
Fax: + 372 606 1691

Finland
OY GRUNDFOS Pumput AB
Trukkikuja 1
FI-01360 Vantaa
Tel.: +358-(0) 207 889 500

France
Pompes GRUNDFOS Distribution S.A.
Parc d'Activités de Chesnes
57, rue de Malacombe
F-38290 St. Quentin Fallavier (Lyon)
Tel.: +33-4 74 82 15 15
Fax: +33-4 74 94 10 51

Germany
GRUNDFOS GMBH
Schlüterstr. 33
40699 Erkrath
Tel.: +49-(0) 211 929 69-0
Fax: +49-(0) 211 929 69-3799
E-mail: infoservice@grundfos.de
Service in Deutschland:
kundendienst@grundfos.de

Greece
GRUNDFOS Hellas A.E.B.E.
20th km. Athinon-Markopoulou Av.
P.O. Box 71
GR-19002 Peania
Tel.: +0030-210-66 83 400
Fax: +0030-210-66 46 273

Hong Kong
GRUNDFOS Pumps (Hong Kong) Ltd.
Unit 1, Ground floor, Siu Wai industrial
Centre
29-33 Wing Hong Street & 68 King Lam
Street, Cheung Sha Wan
Kowloon
Tel.: +852-27861706 / 27861741
Fax: +852-27858664

Hungary
GRUNDFOS South East Europe Kft.
Tópark u. 8
H-2045 Törökbálint
Tel.: +36-23 511 110
Fax: +36-23 511 111

India
GRUNDFOS Pumps india Private Limited
118 Old Mahabalipuram Road
Thoraipakkam
Chennai 600 097
Tel.: +91-44 2496 6800

Indonesia
PT GRUNDFOS Pompa
Graha intirub Lt. 2 & 3
Jln. Cililitan Besar No.454. Makasar,
Jakarta Timur
ID-Jakarta 13650
Tel.: +62 21-469-51900
Fax: +62 21-460 6910 / 460 6901

Ireland
GRUNDFOS (Ireland) Ltd.
Unit A, Merrywell Business Park
Ballymount Road Lower
Dublin 12
Tel.: +353-1-4089 800
Fax: +353-1-4089 830

Italy
GRUNDFOS Pompe Italia S.r.l.
Via Gran Sasso 4
I-20060 Truccazzano (Milano)
Tel.: +39-02-95838112
Fax: +39-02-95309290 / 95838461

Japan
GRUNDFOS Pumps K.K.
1-2-3, Shin-Miyakoda, Kita-ku
Hamamatsu
431-2103 Japan
Tel.: +81 53 428 4760
Fax: +81 53 428 5005

Kazakhstan
Grundfos Kazakhstan LLP
7' Kyz-Zhibek Str., Kok-Tobe micr.
KZ-050020 Almaty Kazakhstan
Tel.: +7 (727) 227-98-55/56

Korea
GRUNDFOS Pumps Korea Ltd.
6th Floor, Aju Building 679-5
Yeoksam-dong, Kangnam-ku, 135-916
Seoul, Korea
Tel.: +82-2-5317 600
Fax: +82-2-5633 725

Latvia
SIA GRUNDFOS Pumps Latvia
Deglava biznesa centrs
Augusta Deglava ielā 60
LV-1035, Rīga,
Tel.: + 371 714 9640, 7 149 641
Fax: + 371 914 9646

Lithuania
GRUNDFOS Pumps UAB
Smolensko g. 6
LT-03201 Vilnius
Tel.: + 370 52 395 430
Fax: + 370 52 395 431

Malaysia
GRUNDFOS Pumps Sdn. Bhd.
7 Jalan Peguam U1/25
Glenmarie industrial Park
40150 Shah Alam, Selangor
Tel.: +60-3-5569 2922
Fax: +60-3-5569 2866

Mexico
Bombas GRUNDFOS de México
S.A. de C.V.
Boulevard TLC No. 15
Parque industrial Stiva Aeropuerto
Apodaca, N.L. 66600
Tel.: +52-81-8144 4000
Fax: +52-81-8144 4010

Netherlands
GRUNDFOS Netherlands
Veluwezoom 35
1326 AE Almere
Postbus 22015
1302 CA ALMERE
Tel.: +31-88-478 6336
Fax: +31-88-478 6332
E-mail: info_gnl@grundfos.com

New Zealand
GRUNDFOS Pumps NZ Ltd.
17 Beatrice Tinsley Crescent
North Harbour Industrial Estate
Albany, Auckland
Tel.: +64-9-415 3240
Fax: +64-9-415 3250

Norway
GRUNDFOS Pumper A/S
Strømsveien 344
Postboks 235, Leirdal
N-1011 Oslo
Tel.: +47-22 90 47 00
Fax: +47-22 32 21 50

Poland
GRUNDFOS Pompy Sp. z o.o.
ul. Klonowa 23
Baranowo k. Poznania
PL-62-081 Przeźmierowo
Tel.: (+48-61) 650 13 00
Fax: (+48-61) 650 13 50

Portugal
Bombas GRUNDFOS Portugal, S.A.
Rua Calvet de Magalhães, 241
Apartado 1079
P-2770-153 Paço de Arcos
Tel.: +351-21-440 76 00
Fax: +351-21-440 76 90

Romania
GRUNDFOS Pompe România SRL
S-PARK BUSINESS CENTER, Clădirea A2, etaj 2
Str. Tipografilor, Nr. 11-15, Sector 1, Cod 013714
Bucuresti, Romania
Tel.: 004 021 2004 100
E-mail: romania@grundfos.ro

Serbia
Grundfos Srbija d.o.o.
Omladinskih brigada 90b
11070 Novi Beograd
Tel.: +381 11 2258 740
Fax: +381 11 2281 769
www.rs.grundfos.com

Singapore
GRUNDFOS (Singapore) Pte. Ltd.
25 Jalan Tukang
Singapore 619264
Tel.: +65-6681 9688
Faxax: +65-6681 9689

Slovakia
GRUNDFOS s.r.o.
Prievozská 4D 821 09 BRATISLAVA
Tel.: +421 2 5020 1426
sk.grundfos.com

Slovenia
GRUNDFOS LJUBLJANA, d.o.o.
Leskoškova 9e, 1122 Ljubljana
Tel.: +386 (0) 1 568 06 10
Fax: +386 (0)1 568 06 19
E-mail: tehnika-si@grundfos.com

South Africa
GRUNDFOS (PTY) LTD
16 Lascelles Drive, Meadowbrook Estate
1609 Germiston, Johannesburg
Tel.: (+27) 10 248 6000
Fax: (+27) 10 248 6002
E-mail: lgradidge@grundfos.com

Spain
Bombas GRUNDFOS España S.A.
Camino de la Fuentecilla, s/n
E-28110 Algete (Madrid)
Tel.: +34-91-848 8800
Fax: +34-91-628 0465

Sweden
GRUNDFOS AB
Box 333 (Lunnagårdsgatan 6)
431 24 Mölndal
Tel.: +46 31 332 23 000
Fax: +46 31 331 94 60

Switzerland
GRUNDFOS Pumpen AG
Bruggacherstrasse 10
CH-8117 Fällanden/ZH
Tel.: +41-44-806 8111
Fax: +41-44-806 8115

Taiwan
GRUNDFOS Pumps (Taiwan) Ltd.
7 Floor, 219 Min-Chuan Road
Taichung, Taiwan, R.O.C.
Tel.: +886-4-2305 0868
Fax: +886-4-2305 0878

Thailand
GRUNDFOS (Thailand) Ltd.
92 Chaloem Phrakiat Rama 9 Road
Dokmai, Pravej, Bangkok 10250
Tel.: +66-2-725 8999
Fax: +66-2-725 8998

Turkey
GRUNDFOS POMPA San. ve Tic. Ltd. Sti.
Gebze Organize Sanayi Bölgesi
Ihsan dede Caddesi
2. yol 200. Sokak No. 204
41490 Gebze/ Kocaeli
Tel.: +90 - 262-679 7979
Fax: +90 - 262-679 7905
E-mail: satis@grundfos.com

Ukraine
ТОВ "ГРУНДФОС УКРАЇНА"
Бізнес Центр Європа
Столичне шосе, 103
м. Київ, 03131, Україна
Tel.: (+38 044) 237 04 00
Fax: (+38 044) 237 04 01
E-mail: ukraine@grundfos.com

United Arab Emirates
GRUNDFOS Gulf Distribution
P.O. Box 16768
Jebel Ali Free Zone, Dubai
Tel.: +971 4 8815 166
Fax: +971 4 8815 136

United Kingdom
GRUNDFOS Pumps Ltd.
Grovebury Road
Leighton Buzzard/Beds. LU7 4TL
Tel.: +44-1525-850000
Fax: +44-1525-850011

U.S.A.
Global Headquarters for WU
856 Koomey Road
Brookshire, Texas 77423 USA
Phone: +1-630-236-5500

Uzbekistan
Grundfos Tashkent, Uzbekistan
The Representative Office of Grundfos Kazakhstan in Uzbekistan
38a, Oybek street, Tashkent
Tel.: (+998) 71 150 3290 / 71 150 3291
Fax: (+998) 71 150 3292

Trademarks displayed in this material, including but not limited to Grundfos and the Grundfos logo, are registered trademarks owned by The Grundfos Group. © 2024 Grundfos Holding A/S, all rights reserved.

99212774 **04.2024**

ECM: 1392621