CR, CRI, CRN

50 Hz IEC

Vertical multistage centrifugal pumps

GRUNDFOS

Table of contents

1. Introduction . . . 3
Typical applications . . . 3
Pumped liquids . . . 3
ErP-compliant . . . 4

2. Performance range . . . 5

3. Product range . . . 6

4. Applications . . . 8

5. Features and benefits . . . 9
Pump . . . 9
Motor . . . 9
Terminal box positions . . . 10
Ambient temperature . . . 10
Viscosity . . . 10

6. Construction . . . 11
CR 1s, 1, 3, 5, 10, 15, 20CRE 1, 3, 5, 10, 15, 20 . . . 11
CRI 1s, 1, 3, 5, 10, 15, 20CRIE 1, 3, 5, 10, 15, 20 . . . 12
CRN 1s, 1, 3, 5, 10, 15, 20CRNE 1, 3, 5, 10, 15, 20 . . . 13
CR 32, 45, 64CRE 32, 45, 64 . . . 14
CRN 32, 45, 64CRNE 32, 45, 64 . . . 15
CR 95, 125, 155, 185, 215, 255CRE 95, 125, 155 . . . 16
CRN 95, 125, 155, 185, 215, 255CRNE 95, 125, 155 . . . 17

7. Identification . . . 18
Type key . . . 18

8. Operating conditions . . . 19
Maximum operating pressure and liquid temperature . . . 19
Operating range of the shaft seal . . . 21
Maximum inlet pressure . . . 22

9. Selection . . . 23
Selection of pumps . . . 23
Duty point of the pump . . . 23
Grundfos Product Center . . . 23
Sizing data . . . 23
Pump efficiency . . . 23
Pump material . . . 24
Pump connections . . . 24
Shaft seal . . . 24
Servicing shaft seals . . . 24
Thrust handling device . . . 24
Operating pressure and inlet pressure . . . 25
Minimum inlet pressure, NPSH . . . 25
How to read the curve charts . . . 26
Guidelines to performance curves . . . 27

10. Performance curves and technical data . . . 28
CR 1s . . . 28
CRI, CRN 1s . . . 30
CR 1 . . . 32
CRI, CRN 1 . . . 34
CR 3 . . . 36
CRI, CRN 3 . . . 38
CR 5 . . . 40
CRI, CRN 5 . . . 42
CR 10 . . . 44
CRI, CRN 10 . . . 46
CR 15 . . . 48
CRI, CRN 15 . . . 50
CR 20 . . . 52
CRI, CRN 20 . . . 54
CR 32 . . . 56
CRN 32 . . . 58
CR 45 . . . 60
CRN 45 . . . 62
CR 64 . . . 64
CRN 64 . . . 66
CR 95 . . . 68
CRN 95 . . . 70
CR 125 . . . 72
CRN 125 . . . 74
CR 155 . . . 76
CRN 155 . . . 78
CR 185 . . . 80
CRN 185 . . . 82
CR 215 . . . 84
CRN 215 . . . 86
CR 255 . . . 88
CRN 255 . . . 90

11. Motor data . . . 92
2-pole motors for CR, CRI, CRN, 50 Hz . . . 92

12. List of pumped liquids . . . 93

13. Accessories . . . 96
Pipe connection . . . 96
LiqTec . . . 103
GRUNDFOS iSOLUTIONS MONITOR . . . 103
Sensors . . . 104

14. Variants . . . 105

15. Grundfos Product Center . . . 106

16. Document quality feedback . . . 107

1. Introduction

This data booklet deals with Grundfos CR, CRI and CRN pumps.

GR5381

CR, CRI and CRN 1s-64

TM069062

CR, CRN 95-255

CR pumps are vertical multistage, centrifugal pumps. The in-line design of the pumps enables installation in a horizontal one-pipe system where the inlet and outlet ports are in the same horizontal level and have the same pipe dimensions. This design provides a more compact pump design.

The pumps are available in various sizes and various numbers of stages to deliver the flow rate and pressure required.

CR pumps are designed for a variety of applications ranging from the pumping of potable water to the pumping of chemicals. The pumps are therefore suitable for a wide diversity of pumping systems where the performance and material of the pump meet specific demands.

A CR pump consists of two main components: the motor and the pump unit.

The motor is a Grundfos or Innomotics motor designed to EN standards.

The pump unit consists of optimized hydraulics, various types of connections, a sleeve, a pump head and various other parts.

CR pumps are available in various material versions according to the pumped liquid.

Typical applications

The pumps are suitable for numerous applications. The following applications are some typical examples.

Water supply:

- Filtration and transport waterworks
- Distribution from waterworks
- Pressure boosting of mains.

Industrial:

- Pressure boosting
- Process water transfer
- Boiler feed
- Cooling and air conditioning
- Firefighting systems
- Special liquids transfer.

Water treatment:

- Filtration
- Brackish water reverse osmosis.

Commercial building services:

- Chilled-water systems
- Hot-water systems
- Pressure boosting
- Boiler feed
- Firefighting systems
- District energy systems.

Related information

4. Applications

Pumped liquids

The pumps are designed to pump non-explosive liquids that do not chemically attack the pump materials.

When pumping liquids with a density and/or viscosity higher than that of water, oversized motors may be required.

Whether a pump is suitable for a particular liquid depends on several factors of which the most important are the chloride content, pH-value, temperature and content of chemicals and oils.

Please note that aggressive liquids may attack or dissolve the protective oxide film of the stainless steel and thus cause corrosion.

Related information

12. List of pumped liquids

CRE and CRIECR and CRI

The pumps are suitable for non-corrosive liquids.

Use them for liquid transfer, circulation and pressure boosting of cold or hot clean water.

CRNECRN

The pumps are suitable for industrial liquids.

Use them in systems where all parts in contact with the liquid must be made of high-grade stainless steel.

CRT

For saline or chloride-containing liquids such as seawater or for oxidising agents such as hypochlorites, we offer CRT and CRTE pumps made of titanium.

See the separate data booklet on CRT and CRTE available at www.grundfos.com (Grundfos Product Center).

ErP-compliant

The product is energy-optimized and complies with the ecodesign requirements for water pumps specified in the ErP Directive, Commission Regulation (EC) No 547/2012, effective as of January 1, 2013. From that day on, all pumps are classified and graduated in the Minimum Efficiency Index (MEI).

Minimum Efficiency Index

Minimum Efficiency Index (MEI) means the dimensionless scale unit for hydraulic pump efficiency at best efficiency point (BEP), part load (PL) and overload (OL). The Commission Regulation (EU) sets efficiency requirements to MEI over or equal to 0.10 as of January 1, 2013, and MEI over or equal to 0.40 as of January 1, 2015. An indicative benchmark for best-performing water pump available on the market as of January 1, 2013 is determined in the Commission Regulation.

- The benchmark for most efficient water pumps is MEI over or equal to 0.70.
- The efficiency of a pump with a trimmed impeller is usually lower than that of a pump with a full impeller diameter. The trimming of the impeller adapts the pump to a fixed duty point, leading to reduced energy consumption. The Minimum Efficiency Index (MEI) is based on the full impeller diameter.
- The operation of this water pump with variable duty points may be more efficient and economic when controlled, for example, by the use of a variable-speed drive that matches the pump duty to the system.
- Information on benchmark efficiency is available at http://europump.eu/efficiencycharts.

MEI values for CR pumps

Pump type	MEI
CR 1s-3	0.54
CR 1-3	> 0.70
CR 3-3	> 0.70
CR 5-3	0.57
CR 10-3	> 0.70
CR 15-3	> 0.70
CR 20-3	> 0.70
CR 32-3	> 0.70
CR 45-3	> 0.70
CR 64-3	> 0.70
CR 95-3	> 0.70
CR 125-3	> 0.70
CR 155-3	> 0.70
CR 185-3	> 0.70
CR 215-3	≥ 0.70
CR 255-3	≥ 0.70

2. Performance range

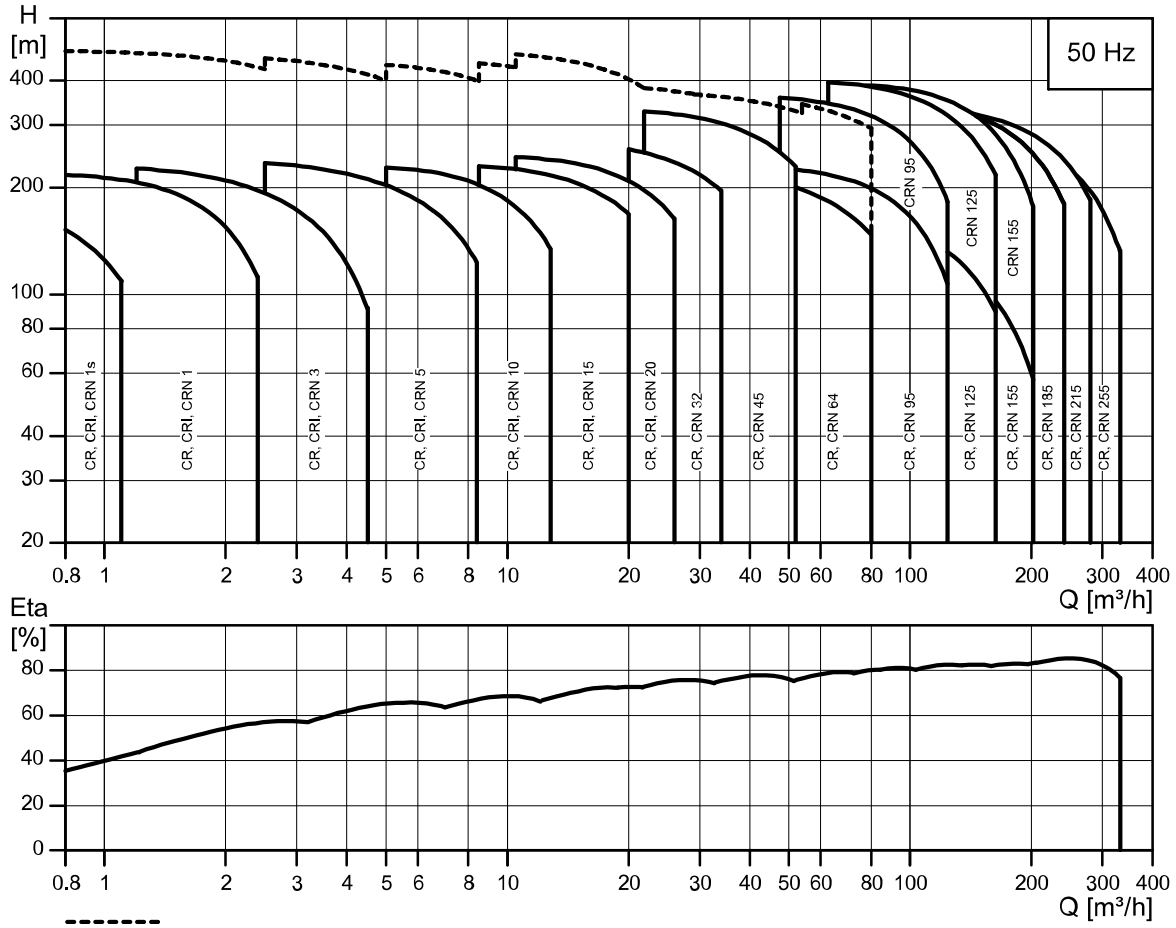

Performance range for CR, CRI, CRN 50 Hz

- - - - - High-pressure range

3. Product range

CR, CRI, CRN pump size	1s	1	3	5	10	15	20
Rated flow rate [m^3/h]	0.8	1	3	5	10	15	20
Flow rate [m^3/h]	0.3 - 1.1	0.7 - 2.4	1.2 - 4.5	2.5 - 8.5	5-13	9-24	11-29
Minimum liquid temperature [°C] [1)]	-20	-20	-20	-20	-20	-20	-20
Maximum liquid temperature [°C] [1)]	120	120	120	120	120	120	120
Maximum pump efficiency [%]	35	48	58	66	70	72	72
Maximum pressure [bar]	21	22	24	24	22	23	25
High pressure [bar], on request (CRN)	-	47	41	47	44	47	48
Motor power [kW]	0.37 - 1.1	0.37 - 2.2	0.37 - 3	0.37 - 5.5	0.37 - 7.5	1.1 - 15	1.1 - 18.5
Standard versions							
CR: Cast iron and stainless steel EN 10088 1.4301≈AISI 304	●	●	●	●	●	●	●
CRI: Stainless steel EN 10088 1.4301≈AISI 304	●	●	●	●	●	●	●
CRN: Stainless steel EN 10088 1.4401≈AISI 316	●	●	●	●	●	●	●
CRT: Titanium	See the CRT, CRTE data booklet available on Grundfos Product Center at http://product-selection.grundfos.com or http://net.grundfos.com/qr/i/V7149894						
CR pipe connection							
Oval flange (BSP)	Rp 1	Rp 1	Rp 1	Rp 1 1/4	Rp 1 1/4	Rp 2	Rp 2
Oval flange (BSP), on request	Rp 1 1/4	Rp 1 1/4	Rp 1 1/4	Rp 1	Rp 1 1/4 Rp 2	Rp 2 1/2	Rp 2 1/2
Flange	DN 25/ DN 32	DN 25/ DN 32	DN 25/ DN 32	DN 25/ DN 32	DN 40	DN 50	DN 50
Flange, on request	-	-	-	-	DN 50	-	-
CRI pipe connection							
Oval flange (BSP)	Rp 1	Rp 1	Rp 1 1/4	Rp 1 1/4	Rp 1 1/2	Rp 2	Rp 2
Oval flange (BSP), on request	Rp 1 1/4	Rp 1 1/4	Rp 1	Rp 1	Rp 2	-	-
Flange	DN 25/ DN 32	DN 25/ DN 32	DN 25/ DN 32	DN 25/ DN 32	DN 40	DN 50	DN 50
Flange, on request	-	-	-	-	DN 50	-	-
PJE coupling (Victaulic type)	DN 32	DN 32	DN 32	DN 32	DN 50	DN 50	DN 50
Actual outside diameter [mm]	∅48.3	∅48.3	∅48.3	∅48.3	∅60.3	∅60.3	∅60.3
Union (+GF+)	G 2	G 2	G 2	G 2	G 2 3/4	G 2 3/4	G 2 3/4
CRN pipe connection							
Oval flange (BSP)	Rp 1	Rp 1	Rp 1 1/4	Rp 1 1/4	Rp 1 1/2	Rp 2	Rp 2
Oval flange (BSP), on request	Rp 1 1/4	Rp 1 1/4	Rp 1	Rp 1	Rp 2	-	-
Flange	DN 25/ DN 32	DN 25/ DN 32	DN 25/ DN 32	DN 25/ DN 32	DN 40	DN 50	DN 50
Flange, on request	-	-	-	-	DN 50	-	-
PJE coupling (Victaulic type)	DN 32	DN 32	DN 32	DN 32	DN 50	DN 50	DN 50
Actual outside diameter [mm]	∅48.3	∅48.3	∅48.3	∅48.3	∅60.3	∅60.3	∅60.3
Union (+GF+)	G 2	G 2	G 2	G 2	G 2 3/4	G 2 3/4	G 2 3/4

1) Liquid temperature -40 to +180 °C (oils up to +240 °C) is available on request.

● Standard.

CR, CRN pump size	32	45	64	95	125	155	185	215	255
Rated flow rate [m^3/h]	32	45	64	95	125	155	185	215	255
Flow rate [m^3/h]	15-40	22-58	30-85	45-120	60-160	75-200	92-240	108-280	128–330
Minimum liquid temperature [°C] [2]	-30	-30	-30	-20	-20	-20	-20	-20	-20
Maximum liquid temperature [°C] [3]	120	120	120	120	120	120	120	120	120
Maximum pump efficiency [%]	78	79	80	81	82	82	82	84	84
Maximum pressure [bar]	28	33	22	36 [4]	39 [4]	39 [4]	35	32	28
High pressure [bar], on request (CRN)	50	49	41	-	-	-	-	-	-
Motor power [kW]	1.5 - 30	3-45	4-45	5.5 - 90	11-132	11-160	18.5 - 200	22-200	30-200
Standard versions									
CR: Cast iron and stainless steel EN 10088 1.4301≈AISI 304	●	●	●	●	●	●	●	●	●
CRN: Stainless steel EN 10088 1.4401≈AISI 316	●	●	●	●	●	●	●	●	●
CR pipe connection									
Oval flange (BSP)	-	-	-	-	-	-	-	-	-
Oval flange (BSP), on request	-	-	-	-	-	-	-	-	-
Flange	DN 65	DN 80	DN 100	DN 100	DN 150	DN 150	DN 200	DN 200	DN 200
Flange, on request	DN 80	DN 100	DN 125	DN 125	-	-	-	-	-
CRN pipe connection									
Oval flange (BSP)	-	-	-	-	-	-	-	-	-
Oval flange (BSP), on request	-	-	-	-	-	-	-	-	-
Flange	DN 65	DN 80	DN 100	DN 100	DN 150	DN 150	DN 200	DN 200	DN 200
Flange, on request	DN 80	DN 100	DN 125	DN 125	-	-	-	-	-
PJE coupling (Victaulic type)	DN 80	DN 100	DN 100	DN 100	DN 150	DN 150	DN 200	DN 200	DN 200
Actual outside diameter [mm]	88.9	114.3	114.3	114.3	168.3	168.3	219.1	219.1	219.1
Union (+GF+)	-	-	-	-	-	-	-	-	-

2) Minimum liquid temperature down to -40 °C is standard for CRN 32, 45 and 64, and available on request for CRN 95, 125 and 155.

3) CR, CRN 32-155: Maximum liquid temperature up to +180 °C (oils up to 240 °C) is available on request.

4) CR 95-155: Maximum operating pressure is 25 bar. CRN 95-155: Maximum operating pressure is 40 bar. Note that CRN 95 pumps with motors above 55 kW and CRN 125-155 pumps with motors above 110 kW require a soft starter or frequency converter.

● Standard.

4. Applications

Water supply

	CR, CRI	CRN
Filtration and transfer at waterworks	●	❍
Distribution from waterworks	●	❍
Pressure boosting in mains	●	❍
Pressure boosting in high-rise buildings, hotels	●	❍
Pressure boosting for industrial water supply	●	❍

Industry

	CR, CRI	CRN
Pressure boosting		
Process-water systems	●	●
Washing and cleaning systems	●	●
Vehicle-washing tunnels	●	❍
Firefighting systems	●	-
Liquid transfer		
Cooling and air-conditioning systems (refrigerants)	●	❍
Boiler feed and condensate systems	●	❍
Machine tools (cooling lubricants)	●	●
Aquafarming [5)]	●	❍
Special transfer duties		
Oils and alcohols	●	●
Acids and alkalis [5)]	-	●
Glycol and coolants	●	●

5) CRT version available. For further information about CRT pumps, see the section on pumped liquids or the related CRT product guide.

Water treatment

	CR, CRI	CRN
Ultra-filtration systems	-	●
Reverse osmosis systems [6)]	-	●
Softening, ionising, demineralising systems	-	●
Distillation systems	-	●
Separators	●	●
Swimming baths [6)]	-	●

6) CRT version available. For further information about CRT pumps, see the section on pumped liquids or the related CRT product guide.

Irrigation

	CR, CRI	CRN
Field irrigation (flooding)	●	❍
Sprinkler irrigation	●	❍
Drip-feed irrigation	●	❍

● Recommended version
❍ Alternative version
Note that for applications involving CIP (clean-in-place) and pumps with motors above 55 kW, you must use a bearing flange and a base without thrust handling device.

5. Features and benefits

Pump

The CR pumps are non-self-priming, vertical multistage centrifugal pumps.

The pumps are available with a Grundfos or Innomotics standard motor.

The pump consists of a base and a pump head. The chamber stack and the sleeve are secured between the base and the pump head by means of staybolts. The base has inlet and outlet ports on the same level (in line). All pumps are fitted with a maintenance-free mechanical shaft seal of the cartridge type.

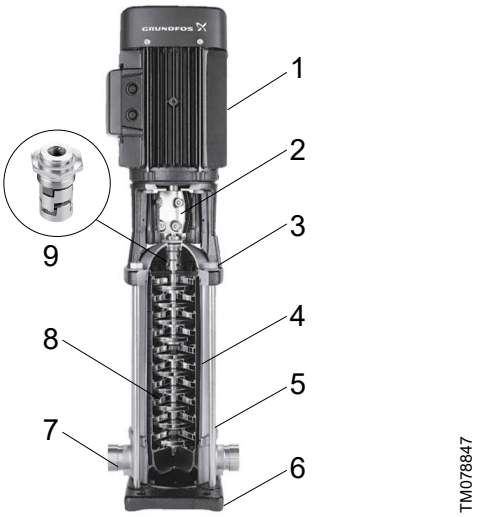

CR pump

Pos.	Description
1	Motor
2	Coupling
3	Pump head
4	Sleeve
5	Staybolts
6	Base plate
7	Base
8	Impellers
9	Shaft seal (cartridge type)

Motor

Grundfos MG and Innomotics motors

CR, CRI and CRN pumps are fitted with totally enclosed, fan-cooled, 2-pole standard motors with principal dimensions to EN standards.

Electrical tolerances according to EN 60034.

CR, CRI, CRN pumps are fitted with three-phase MG motors as standard up to 22 kW and Innomotics motors from 30 to 200 kW.

CR, CRI, CRN pumps from 0.37 to 2.2 kW are also available with single-phase motors (1 x 220-230/240 V). See Grundfos Product Center (http://product-selection.grundfos.com/).

Electrical data

	Standard motors CR, CRI, CRN	
Mounting designation	Up to 4 kW: B14/V18 tapped-hole flange From 5.5 kW: B5/V1 free-hole flange	
Insulation class	F	
Efficiency class	Up to 55 kW: IE3 From 75 kW: IE4	
Enclosure class	IP55 [7]	
Supply voltage **Tolerance: +/- 10 %**	3 x 220-240/380-415 V 3 x 380-415 V 3 x 380-415/660-690 V 3 x 380-420/660-725 V	P2: 0.37 - 1.5 kW P2: 2.2 - 5.5 kW P2: 7.5 - 22 kW P2: 30-200 kW
Supply frequency	50 Hz	

[7] IP44 and IP54 are available on request.

Grundfos E-motors

We also offer frequency-controlled CRE pumps which are the ideal choice for a number of applications characterized by a demand for a variable flow rate at a constant pressure. These pumps are suited for water supply systems and pressure boosting as well as for industrial applications. Depending on the application, the pumps offer energy savings, increased comfort and improved processing.

See the CRE, CRIE, CRNE data booklet available in Grundfos Product Center at http://product-selection.grundfos.com/.

Optional motors

The Grundfos standard range of motors covers a wide variety of application demands. However, for special applications or operating conditions, custom-built motor solutions can be provided, such as the following:

- ATEX-approved motors
- MG motors with anti-condensation heating unit
- motors with thermal protection.

Motor protection of MG and Innomotics motors

Single-phase Grundfos motors have a built-in thermal overload switch (TP 211 according to IEC 34-11).

Three-phase motors must be connected to a motor-protective circuit breaker according to local regulations.

Three-phase Grundfos motors as from 3 kW have a built-in thermistor (PTC) according to DIN 44082 (TP 211 according to IEC 34-11).

Terminal box positions

As standard, the terminal box is fitted on the inlet side of the pump.

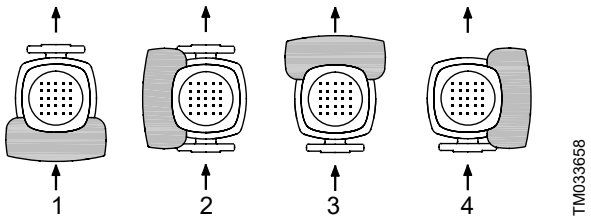

Terminal box positions

Pos.	Description
1	6 o'clock position (standard)
2	9 o'clock position
3	12 o'clock position
4	3 o'clock position

Ambient temperature

Motor power [kW]	Motor make	Motor efficiency class	Maximum ambient temperature [°C]	Maximum altitude above sea level [m]
0.37 - 0.55	MG	-	40	1000
0.75 - 22	MG	IE3	60	3500
30-200	Innomotics	IE3/IE4	55 [8)]	2750

8) The maximum ambient temperature for Innomotics motors operated by a frequency converter is 40 °C.

If the ambient temperature exceeds the above maximum temperatures or the pump is installed at an altitude exceeding the above altitude values, the motor must not be fully loaded due to the risk of overheating. Overheating may result from excessive ambient temperatures or the low density and consequently low cooling effect of the air.

In such cases, it may be necessary to use a motor with a higher rated output.

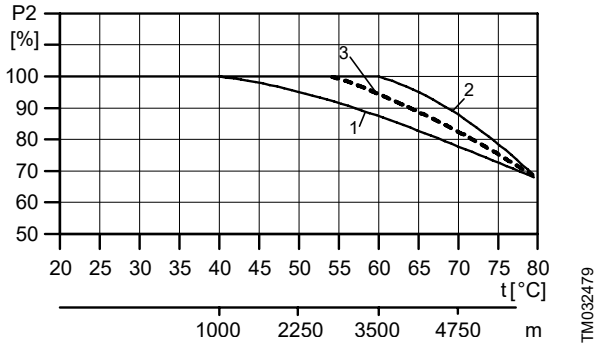

Motor output in relation to temperature and altitude

Pos.	Motor power [kW]	Motor make
1	0.37 - 0.55	MG
2	0.75 - 22	MG
3	30-200	Innomotics

Viscosity

Pumping liquids with densities or kinematic viscosities higher than those of water will cause a considerable pressure drop, a drop in the hydraulic performance and a rise in the power consumption.

In such situations, the pump must be fitted with a larger motor. If in doubt, contact Grundfos.

6. Construction

CR 1s, 1, 3, 5, 10, 15, 20CRE 1, 3, 5, 10, 15, 20

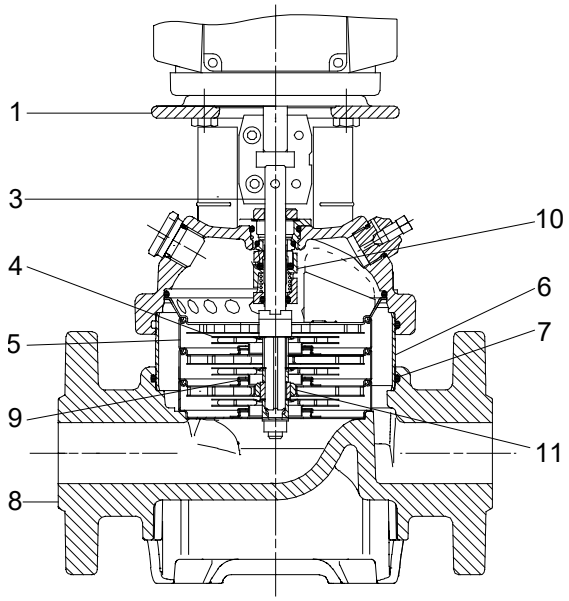

Materials, CRMaterials, CRE

Pos.	Designation	Materials	DIN/EN	≈ AISI/ASTM
1	Pump head	Grey cast iron	EN 1561 EN-GJL-200	ASTM 25B
3	Shaft	Stainless steel	EN 10088 1.4401 [9)] EN 10088 1.4057 [10)]	AISI 316 [9)] AISI 431 [10)]
4	Impeller	Stainless steel	EN 10088 1.4301	AISI 304
5	Chamber	Stainless steel	EN 10088 1.4301	AISI 304
6	Sleeve	Stainless steel	EN 10088 1.4301	AISI 304
7	O-ring for sleeve	EPDM or FKM	-	-
8	Base	Grey cast iron	EN 1561 EN-GJL-250	ASTM 25B
9	Neck ring	PTFE	-	-
10	Shaft seal (seal faces)	Silicon carbide/silicon carbide	-	-
11	Bearing ring	Silicon carbide/silicon carbide	-	-
	Staybolts	Bright steel	EN 10277 C35R	-

9) CR 1s, 1, 3, 5.CRE 1, 3, 5.

10) CR 10, 15, 20.CRE 10, 15, 20.

CRI 1s, 1, 3, 5, 10, 15, 20CRIE 1, 3, 5, 10, 15, 20

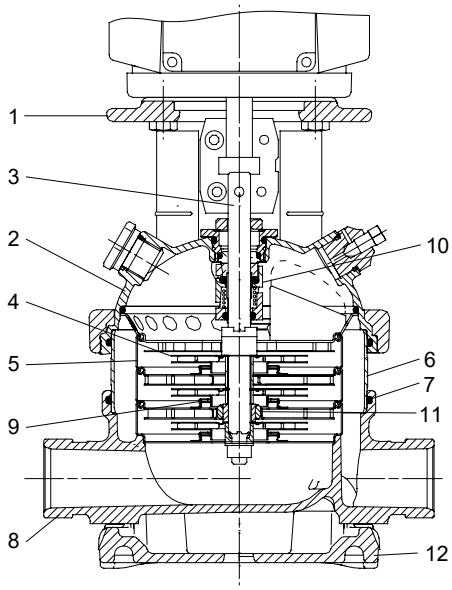

TM021195

Materials, CRIMaterials, CRIE

Pos.	Designation	Materials	DIN/EN	≈ AISI/ASTM
1	Motor stool	Grey cast iron [11]	EN 1563 EN-GJS-450-10	ASTM A536 65-45-12
2	Pump head	Stainless steel	EN 10283 1.4408	CF 8M equal to AISI 316
3	Shaft	Stainless steel	EN 10088 1.4401 [12] EN 10088 1.4057 [13]	AISI 316 [12] AISI 431 [13]
4	Impeller	Stainless steel	EN 10088 1.4301	AISI 304
5	Chamber	Stainless steel	EN 10088 1.4301	AISI 304
6	Sleeve	Stainless steel	EN 10088 1.4301	AISI 304
7	O-ring for sleeve	EPDM or FKM	-	-
8	Base	Stainless steel	EN 10283 1.4408	CF 8M equal to AISI 316
9	Neck ring	PTFE	-	-
10	Shaft seal (seal faces)	Silicon carbide/silicon carbide	-	-
11	Bearing ring	Silicon carbide/silicon carbide	-	-
12	Base plate	Grey cast iron [11]	EN 1561 EN-GJL-200 [13]+ [14] EN 1563 EN-GJS-500-7 [15]	ASTM 25B [13]+ [14] ASTM A536 65-45-12 [15]
	Staybolts	Bright steel	EN 10277 C35R	-

[11] Stainless steel available on request.

[12] CRI 1s, 1, 3, 5.CRIE 1, 3, 5.

[13] CRI 10, 15, 20.CRIE 10, 15, 20.

[14] CRI 1s, 1, 3, 5 with FGJ flange connection.CRIE 1, 3, 5 with FGJ flange connection.

[15] CRI 1s, 1, 3, 5 with clamp connections, such as PJE, CA.CRIE 1, 3, 5 with clamp connections, such as PJE, CA.

CRN 1s, 1, 3, 5, 10, 15, 20CRNE 1, 3, 5, 10, 15, 20

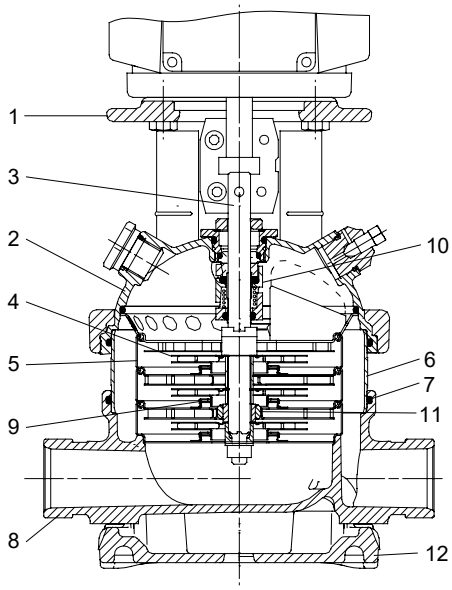

Materials, CRNMaterials, CRNE

Pos.	Designation	Materials	DIN/EN	≈ AISI/ASTM
1	Motor stool	Grey cast iron [16]	EN 1563 EN-GJS-450-10	ASTM A536 65-45-12
2	Pump head	Stainless steel	EN 10283 1.4408	CF 8M equal to AISI 316
3	Shaft	Stainless steel	EN 10088 1.4401 [17] EN 10088 1.4460 [18]	AISI 316 [17] AISI 329 [18]
4	Impeller	Stainless steel	EN 10088 1.4401	AISI 316
5	Chamber	Stainless steel	EN 10088 1.4401	AISI 316
6	Sleeve	Stainless steel	EN 10088 1.4401	AISI 316
7	O-ring for sleeve	EPDM or FKM	-	-
8	Base	Stainless steel	EN 10283 1.4408	CF 8M equal to AISI 316
9	Neck ring	PTFE	-	-
10	Shaft seal (seal faces)	Silicon carbide/silicon carbide	-	-
11	Bearing ring	Silicon carbide/silicon carbide	-	-
12	Base plate	Grey cast iron [16]	EN 1561 EN-GJL-200 [18]+ [19] EN 1563 EN-GJS-500-7 [20]	ASTM 25B [18]+ [19] ASTM A536 65-45-12 [20]
	Staybolts	Stainless steel	EN 10088 1.4401 [17] EN 10088 1.4057 [18]	AISI 316 [17] AISI 431 [18]

[16] Stainless steel available on request.

[17] CRN 1s, 1, 3, 5.CRNE 1, 3, 5.

[18] CRN 10, 15, 20.CRNE 10, 15, 20.

[19] CRN 1s, 1, 3, 5 with FGJ flange connection.CRNE 1, 3, 5 with FGJ flange connection.

[20] CRN 1s, 1, 3, 5 with clamp connections, such as PJE, CA.CRNE 1, 3, 5 with clamp connections, such as PJE, CA.

CR 32, 45, 64CRE 32, 45, 64

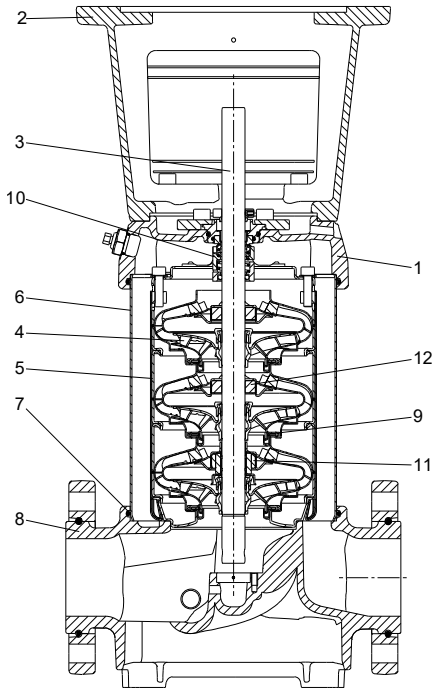

TM060711

Materials, CRMaterials, CRE

Pos.	Designation	Materials	DIN/EN	≈ AISI/ASTM
1	Pump head	Ductile cast iron	EN 1563 EN-GJS-500-7	ASTM A536 65-45-12
2	Motor stool	Grey cast iron	EN 1561 EN-GJL-200	ASTM 25B
3	Shaft	Stainless steel	EN 10088 1.4057	AISI 431
4	Impeller	Stainless steel	EN 10088 1.4301	AISI 304
5	Chamber	Stainless steel	EN 10088 1.4301	AISI 304
6	Sleeve	Stainless steel	EN 10088 1.4301	AISI 304
7	O-ring for sleeve	EPDM or FKM	-	-
8	Base	Ductile cast iron	EN 1563 EN-GJS-500-7	ASTM A536 65-45-12
9	Neck ring	Carbon-graphite-filled PTFE	-	-
10	Shaft seal (seal faces)	Silicon carbide/silicon carbide	-	-
11	Bearing ring	Silicon carbide/silicon carbide	-	-
12	Support bushing	Carbon-graphite-filled PTFE	-	-
13	Base plate	Ductile cast iron	EN 1563 EN-GJS-500-7	ASTM A536 65-45-12
	Staybolts	Bright steel	EN 10277 ETG 35	-

CRN 32, 45, 64CRNE 32, 45, 64

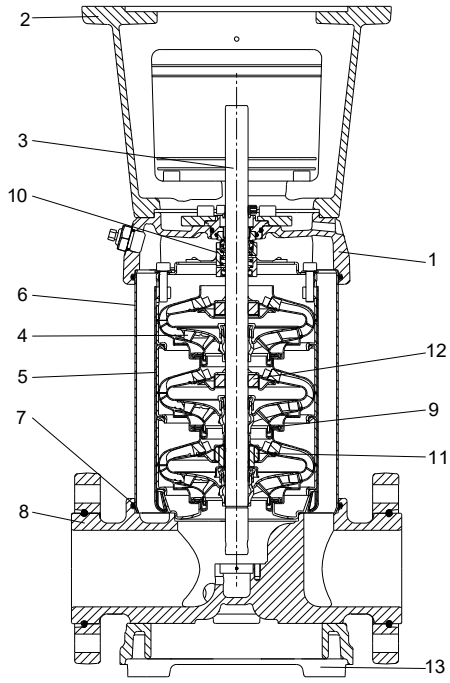

Materials, CRNMaterials, CRNE

Pos.	Designation	Materials	DIN/EN	≈ AISI/ASTM
1	Pump head	Stainless steel	EN 10283 1.4408	CF 8M equal to AISI 316
2	Motor stool	Grey cast iron [21)]	EN 1561 EN-GJL-200	ASTM 25B
3	Shaft	Stainless steel	EN 10088 1.4462	-
4	Impeller	Stainless steel	EN 10088 1.4401	AISI 316
5	Chamber	Stainless steel	EN 10088 1.4401	AISI 316
6	Sleeve	Stainless steel	EN 10088 1.4401	AISI 316
7	O-ring for sleeve	EPDM or FKM		-
8	Base	Stainless steel	EN 10283 1.4408	CF 8M equal to AISI 316
9	Neck ring	Carbon-graphite-filled PTFE	-	-
10	Shaft seal (seal faces)	Silicon carbide/silicon carbide	-	-
11	Bearing ring	Silicon carbide/silicon carbide	-	-
12	Support bushing	Carbon-graphite-filled PTFE	-	-
13	Base plate	Ductile cast iron [21)]	EN 1563 EN-GJS-500-7	ASTM A536 65-45-12
	Staybolts	Stainless steel	EN 10088 1.4057	AISI 431

[21)] Stainless steel available on request.

CR 95, 125, 155, 185, 215, 255CRE 95, 125, 155

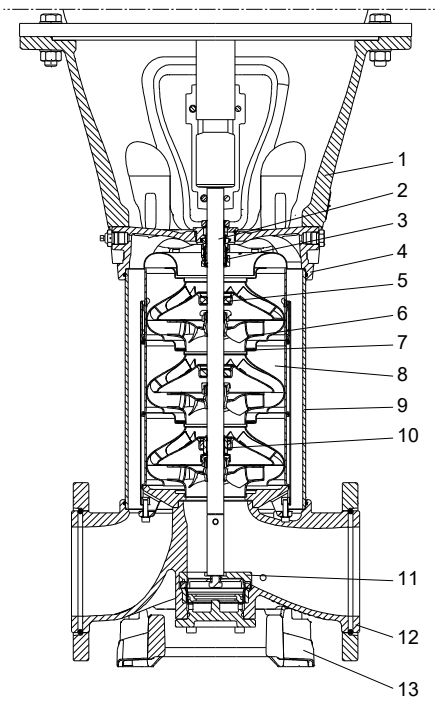

TM065161

Materials, CRMaterials, CRE

Pos.	Designation	Materials	DIN/EN	≈ AISI/ASTM
1	Motor stool	Ductile cast iron	EN 1563 EN-GJS-500-7	ASTM A536-84 65-45-12
2	Shaft	Stainless steel	EN 10088 1.4057 [22)] EN 10088 1.4462 [23)]	AISI 431 [22)] AISI 318 LN [23)]
3	Shaft seal (seal faces)	Silicon carbide/silicon carbide	-	-
4	Pump head	Ductile cast iron	EN 1563 EN-GJS-500-7	ASTM A536-84 65-45-12
5	Support bearing (bush)	Carbon-graphite-filled PTFE		
6	Impeller	Stainless steel	EN 10088 1.4301 EN 10088 1.4401 [24)]	AISI 304 AISI 316 [24)]
7	Neck ring	PEEK	-	-
8	Chamber	Stainless steel	EN 10088 1.4301 EN 10088 1.4401 [24)]	AISI 304 AISI 316 [24)]
9	Sleeve	Stainless steel	EN 10088 1.4301 [22)] EN 10088 1.4404 [23)]	AISI 304 [22)] AISI 316 L [23)]
10	Bearing ring	Tungsten carbide/tungsten carbide	-	-
11	Thrust handling device [25)]	Stainless steel	EN 10088 1.4401 EN 10283 1.4408	AISI 316 CF 8M equal to AISI 316
		Silicon carbide/tungsten carbide	-	-
12	Base	Ductile cast iron	EN 1563 EN-GJS-500-7	ASTM A536-84 65-45-12
13	Base plate	Ductile cast iron	EN 1563 EN-GJS-500-7	ASTM A536-84 65-45-12
	Staybolts	Stainless steel	EN 10088 1.4057	AISI 431

22) CR 95.CRE 95.

23) CR 125, 155, 185, 215, 255. Shaft is made of duplex stainless steel.CRE 125, 155.

24) CR 185, 215, 255.

25) If fitted.

CRN 95, 125, 155, 185, 215, 255CRNE 95, 125, 155

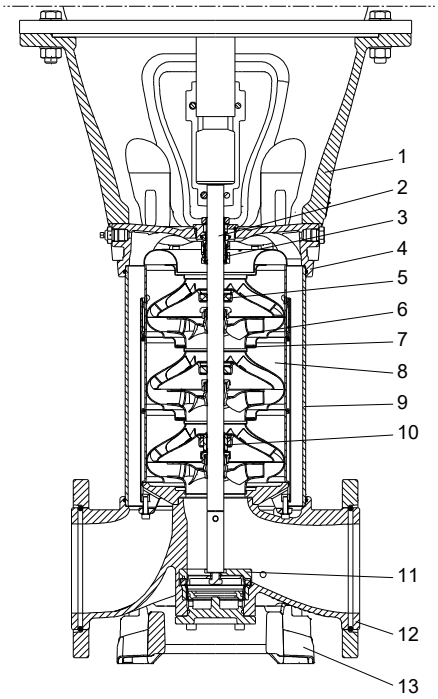

TM065161

Materials, CRNMaterials, CRNE

Pos.	Designation	Materials	DIN/EN	≈ AISI/ASTM
1	Motor stool	Ductile cast iron	EN 1563 EN-GJS-500-7	ASTM A536-84 65-45-12
2	Shaft	Stainless steel	EN 10088 1.4462 [26]	318 LN
3	Shaft seal (seal faces)	Silicon carbide/silicon carbide	-	-
4	Pump head	Stainless steel	EN 10283 1.4408	CF 8M
5	Support bearing (bush)	Carbon-graphite-filled PTFE	-	-
6	Impeller	Stainless steel	EN 10088 1.4401	AISI 316
7	Neck ring	PEEK	-	-
8	Chamber	Stainless steel	EN 10088 1.4401	AISI 316
9	Sleeve	Stainless steel	EN 10088 1.4404	AISI 316 L
10	Bearing ring	Tungsten carbide/tungsten carbide	-	-
11	Thrust handling device [27]	Stainless steel	EN 10088 1.4401 EN 10283 1.4408	AISI 316 CF 8M equal to AISI 316
		Silicon carbide/tungsten carbide	-	-
12	Base	Stainless steel	EN 10283 1.4408	CF 8M
13	Base plate	Ductile cast iron	EN 1563 EN-GJS-500-7	ASTM A536-84 65-45-12
	Staybolts	Stainless steel	EN 10088 1.4057	AISI 431

[26] Duplex stainless steel

[27] If fitted.

7. Identification

Type key

Example: CRE 32-3-2 A-F-A-E-HQQE

Code	Explanation
CR	Type range: CR, CRI, CRN, CRT
E	Pump with integrated frequency converter
32	Flow rate [m^3/h]
3	Number of impellers
2	Number of reduced-diameter impellers
A	Code for pump version
F	Code for pipe connection
A	Code for materials
E	Code for rubber parts
	Code for shaft seal:
H	Shaft seal type designation
Q	Seal face material (rotating seal face)
Q	Seal face material (stationary seal face)
E	Secondary seal material (rubber parts)

Key to codes

Code	Description
Pump version	
A	Basic version
B	Oversize motor
C	CR compact
D	Pump with pressure intensifier
E	Pump with certificate
F	Pump for high temperatures (with air-cooled top)
G	E-pump without operating panel
H	Horizontal version
I	Different pressure rating
J	E-pump with a different maximum speed
K	Pump with low NPSH
L	Pump including Grundfos CUE and certificate
M	Magnetic drive
N	With sensor
O	Cleaned and dried
P	Undersize motor
Q	High-pressure pump with high-speed MGE motor
R	Belt-driven pump
S	High-pressure pump
T	Thrust-handling device
U	ATEX-approved pump
V	Cascade function
W	Deep-well pump with ejector
X	Special version
Y	Electropolished
Z	Pumps with bearing flange
Pipe connection	
A	Oval flange
B	NPT thread
CA	FlexiClamp
CX	TriClamp
F	DIN flange
FC	DIN 11853-2 flange (collar flange)
FE	EN 1092-1, type E
G	ANSI flange
J	JIS flange
N	Changed diameter of ports
P	PJE coupling (Victaulic type)
X	Special version
Materials	
A	Basic version
C	Carbon-free pump
D	Carbon-graphite-filled PTFE (bearings)/tungsten carbide
E	Carbon-free/tungsten carbide rotating bearing (only for Japan)
H	Flanges and base plate EN 1.4408
K	Bronze (bearings)/tungsten carbide
L	Motor stool, base plate and flanges EN 1.4408
M	Motor stool, base plate, coupling and flanges EN 1.4408 and coupling guards in cobber Bolts, nuts and spacing pipes EN 1.4401 or higher grade
N	Flanges EN 1.4408
P	PEEK neck ring
Q	Silicon carbide/silicon carbide bearing in pump and silicon carbide/silicon carbide seal faces in thrust-handling device
R	Silicon carbide/silicon carbide bearing
S	PTFE neck rings
T	Base plate EN 1.4408
U	Silicon carbide/silicon carbide bearing in pump and silicon carbide/tungsten carbide seal faces in thrust-handling device
W	Tungsten carbide/tungsten carbide
X	Special version
Rubber parts in pump	
E	EPDM
F	FXM (Fluoraz®)
K	FFKM (Kalrez®)
N	CR (Neoprene)
V	FKM (Viton®)
Shaft seal type designation	
A	O-ring seal with fixed driver
H	Balanced cartridge seal with O-ring
O	Double seal, back-to-back
P	Double seal, tandem
X	Special version
Seal face material (rotating and stationary seal face)	
B	Carbon, synthetic resin-impregnated
U	Cemented tungsten carbide
Q	Silicon carbide
X	Other ceramics
Secondary seal material (rubber parts)	
E	EPDM
F	FXM (Fluoraz®)
K	FFKM (Kalrez®)
V	FKM (Viton®)

8. Operating conditions

Maximum operating pressure and liquid temperature

	Oval flange		PJE, clamp, union, DIN	
Flange type	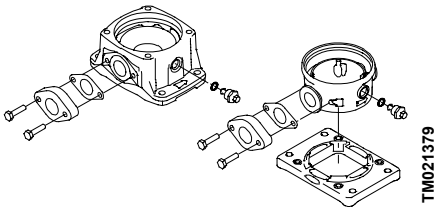 TM021379		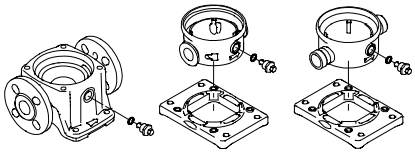 TM021383	
Pump type	**Maximum permissible operating pressure [28]** **[bar]**	**Liquid temperature** **[°C]**	**Maximum permissible operating pressure [28]** **[bar]**	**Liquid temperature** **[°C]**
CR, CRI, CRN 1s	16	-20 to +120	25	-20 to +120
CR, CRI, CRN 1	16		25	
CR, CRI, CRN 3	16		25	
CR, CRI, CRN 5	16		25	
CR, CRI 10-1 → 10-16	16		25	
CR, CRI 10-17 → 10-22	-	-	25	
CRN 10	-	-	25	
CR, CRI 15-1 → 15-7	10	-20 to +120	-	-
CR, CRI 15-1 → 15-10	-	-	16	-20 to +120
CR, CRI 15-12 → 15-17	-	-	25	
CRN 15	-	-	25	
CR, CRI 20-1 → 20-7	10	-20 to +120	-	-
CR, CRI 20-1 → 20-10	-	-	16	-20 to +120
CR, CRI 20-12 → 20-17	-	-	25	
CRN 20	-	-	25	
CR, CRN 32-1-1 → 32-7	-	-	16	-30 to +120
CR, CRN 32-8-2 → 32-14	-	-	30	
CR, CRN 45-1-1 → 45-5	-	-	16	
CR, CRN 45-6-2 → 45-11	-	-	30	
CR, CRN 45-12-2 → 45-13-2	-	-	33	
CR, CRN 64-1-1 → 64-5	-	-	16	
CR, CRN 64-6-2 → 64-8-1	-	-	30	

[28] In standard configurations. For operating conditions outside the standard, contact Grundfos.

	Oval flange		PJE, clamp, union, DIN	
Flange type	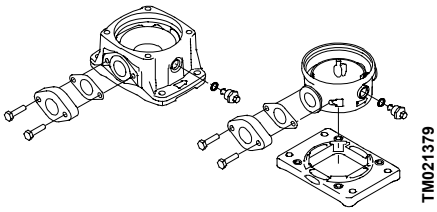 TM021379		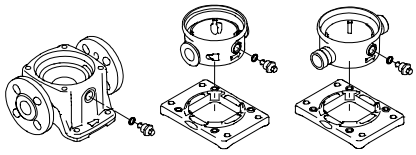 TM021383	
Pump type	**Maximum permissible operating pressure** [28] **[bar]**	**Liquid temperature [°C]**	**Maximum permissible operating pressure** [28] **[bar]**	**Liquid temperature [°C]**
CR, CRN 95-1-1 → 95-5	-	-	16	-20 to +120 [29]
CR, CRN 95-6 → 95-8	-	-	25	
CRN 95-9 → 95-12	-	-	40	
CR, CRN 125-1 → 125-4	-	-	16	
CR, CRN 125-5 → 125-7	-	-	25	
CRN 125-8 → 125-12	-	-	40	
CR, CRN 155-1-1 → 155-4-1	-	-	16	
CRN 155-5-2 → 155-6	-	-	25	
CRN 155-7 → 155-11-1	-	-	40	
CR, CRN 185-1 → 185-3	-	-	16	
CR, CRN 185-4-3 → 185-5	-	-	25	
CR, CRN 185-6-3 → 185-8	-	-	40	
CR, CRN 215-1-1 → 215-3	-	-	16	
CR, CRN 215-4-2 → 215-5	-	-	25	
CR, CRN 215-6-3 → 215-7-2	-	-	40	
CR, CRN 255-1-1 → 255-3-2	-	-	16	
CR, CRN 255-3 → 255-4	-	-	25	
CR, CRN 255-5-3 → 255-6-2	-	-	40	

29) For operating pressures above 25 bar, see section about operating range of the shaft seal.

Operating range of the shaft seal

All pumps will be delivered with an HQQE/V cartridge shaft seal as standard.

The operating range of the shaft seal depends on operating pressure, pump type, type of shaft seal and liquid temperature. The range of standard shaft seals applies to clean water and water with anti-freeze liquids. For selection of the right shaft seal, see section with list of pumped liquids. If the operating range is exceeded, the life of the shaft seal may be reduced.

Note that if you pump demineralized water with a conductivity below 2 µS/cm with a pump equipped with a silicon carbide/silicon carbide shaft seal, there is an increased risk of electrochemical corrosion. We recommend that you use a silicon carbide/carbon or silicon carbide/tungsten carbide shaft seal instead.

Related information

Shaft seals

12. List of pumped liquids

14. Variants

Shaft seals

Ø12, Ø16 and Ø22 shaft seals

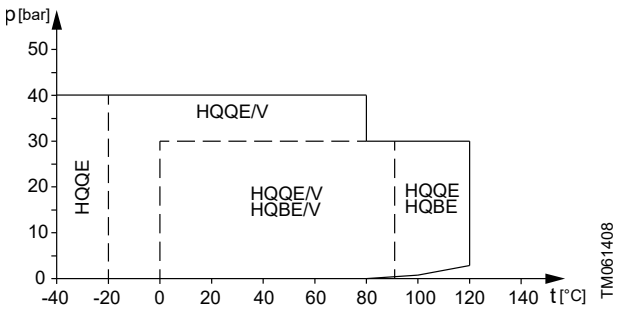

Operating range of standard shaft seals

Standard shaft seal	Motor size [kW]	Description	Liquid temperature [°C]
HQQE	0.37 - 55	O-ring (cartridge) (balanced seal), silicon carbide/silicon carbide, EPDM	-40 to +120
HQQV		O-ring (cartridge) (balanced seal), silicon carbide/silicon carbide, FKM	-20 to +90
HQBE		O-ring (cartridge) (balanced seal), silicon carbide/carbon, EPDM	0 to 120
HQBV		O-ring (cartridge) (balanced seal), silicon carbide/carbon, FKM	0 to 90

Ø28 and Ø36 shaft seals (75-200 kW)

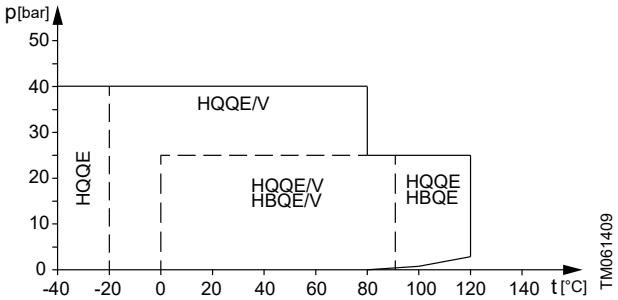

Operating range of standard shaft seals

Standard shaft seal	Motor size [kW]	Description	Liquid temperature [°C]
HQQE	75-200	O-ring (cartridge) (balanced seal), silicon carbide/silicon carbide, EPDM	-40 to +120
HQQV		O-ring (cartridge) (balanced seal), silicon carbide/silicon carbide, FKM	-20 to +90
HQBE		O-ring (cartridge) (balanced seal), silicon carbide/carbon, EPDM	0 to 120
HQBV		O-ring (cartridge) (balanced seal), silicon carbide/carbon, FKM	0 to 90

Maximum inlet pressure

The following table shows the maximum permissible inlet pressure. However, the outlet pressure, which is the actual inlet pressure plus the pressure delivered by the pump must always be lower than the maximum permissible operating pressure.

If the maximum permissible operating pressure is exceeded, the conical bearing in the motor may be damaged and the life of the shaft seal, reduced.

Pump type and stages	Maximum inlet pressure [bar]
CR, CRI, CRN 1s	
1s-2 → 1s-36	10
CR, CRI, CRN 1	
1-2 → 1-36	10
CR, CRI, CRN 3	
3-2 → 3-29	10
3-31 → 3-36	15
CR, CRI, CRN 5	
5-2 → 5-16	10
5-18 → 5-36	15
CR, CRI, CRN 10	
10-1 → 10-6	8
10-7 → 10-22	10
CR, CRI, CRN 15	
15-1 → 15-3	8
15-4 → 15-17	10
CR, CRI, CRN 20	
20-1 → 20-17	10
CR, CRN 32	
32-1-1 → 32-4	4
32-5-2 → 32-10	10
32-11-2 → 32-14	15
CR, CRN 45	
45-1-1 → 45-2	4
45-3-2 → 45-5	10
45-6-2 → 45-13-2	15
CR, CRN 64	
64-1-1 → 64-2-2	4
64-2-1 → 64-4-2	10
64-4-1 → 64-8-1	15
CR, CRN 95	
95-1-1 → 95-1	4
95-2-2 → 95-3-2	10
95-3 → 95-6	15
95-7 → 95-12	20
CR, CRN 125	
125-1 → 125-2-1	10
125-2 → 125-4	15
125-5 → 125-12	20
CR, CRN 155	
155-1-1 → 155-1	10
155-2-2 → 155-3	15
155-4-1 → 155-11-1	20
CR, CRN 185	
185-1-1	10
185-1 → 185-2	15
185-3-3 → 185-8	20
CR, CRN 215	
215-1-1 → 215-2-2	15
215-2-1 → 215-7-2	20
CR, CRN 255	
255-1-1 → 255-1	15
255-2-2 → 255-6-2	20

Examples of operating and inlet pressures

The values for operating and inlet pressures must not be considered individually and must comply with the below statement.

The outlet pressure must be equal to or lower than the maximum operating pressure.

See the following definitions and examples.

Definitions

Pressure type	Definition
Maximum operating pressure	The maximum pressure is stated on the nameplate.
Pump differential pressure	The difference between the outlet pressure and inlet pressure.
Inlet pressure	The pressure measured at the pump inlet.
Outlet pressure	The inlet pressure added to the pump differential pressure.

Example 1

Pump, see CR 5 curve:	CR 5-16 A-A-A
Max. operating pressure:	16 bar
Max. inlet pressure:	10 bar
Pump differential pressure:	10.6 bar * * Flow = 0 m^3/h

This pump is not allowed to start at an inlet pressure of 10 bar, but at an inlet pressure of 16.0 - 10.6 = 5.4 bar.

Example 2

Pump, see CR 10 curve:	CR 10-2 A-A-A
Max. operating pressure:	16 bar
Max. inlet pressure:	8 bar
Pump differential pressure:	2 bar * * Flow = 0 m^3/h

This pump is allowed to start at an inlet pressure of 8 bar, as the outlet pressure is lower than the maximum operating pressure. This results in an operating pressure of 8 + 2 = 10 bar.

If the inlet or operating pressure exceeds the pressure permitted, Grundfos variants meeting your specific requirements may be available on request.

Related information

14. Variants

9. Selection

Selection of pumps

Base the selection of pumps on these parameters:

- duty point of the pump
- sizing data such as pressure loss as a result of height differences, friction loss in the pipes, pump efficiency
- pump materials
- pump connections
- shaft seal.

Duty point of the pump

From a duty point, you can select a pump on the basis of the curve charts in the section on performance curves and technical data.

Ideally, the duty point should match the best efficiency on the pump curve.

Grundfos Product Center

We recommend that you size your pump in Grundfos Product Center, which is a selection program offered by Grundfos.

Grundfos Product Center features a user-friendly and easy-to-use virtual guide which leads you through the selection of the pump for the application in question.

Sizing data

When sizing a pump, take these parameters into account:

- Required flow rate and pressure at the draw-off point.
- Pressure loss as a result of height differences (H_{geo}).
- Friction loss in the pipes (H_f).

  It may be necessary to account for pressure loss in connection with long pipes, bends, valves or similar.
- Best efficiency at the estimated duty point.
- NPSH value.

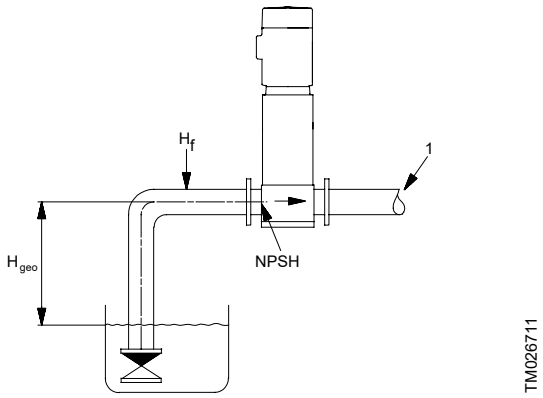

Sizing data

Pos.	Description
1	Required flow rate, required pressure

Pump efficiency

Before determining the best efficiency point, identify the operation pattern of the pump. If you expect the pump to always operate at the same duty point, then select a pump which operates at a duty point corresponding to the best efficiency of the pump.

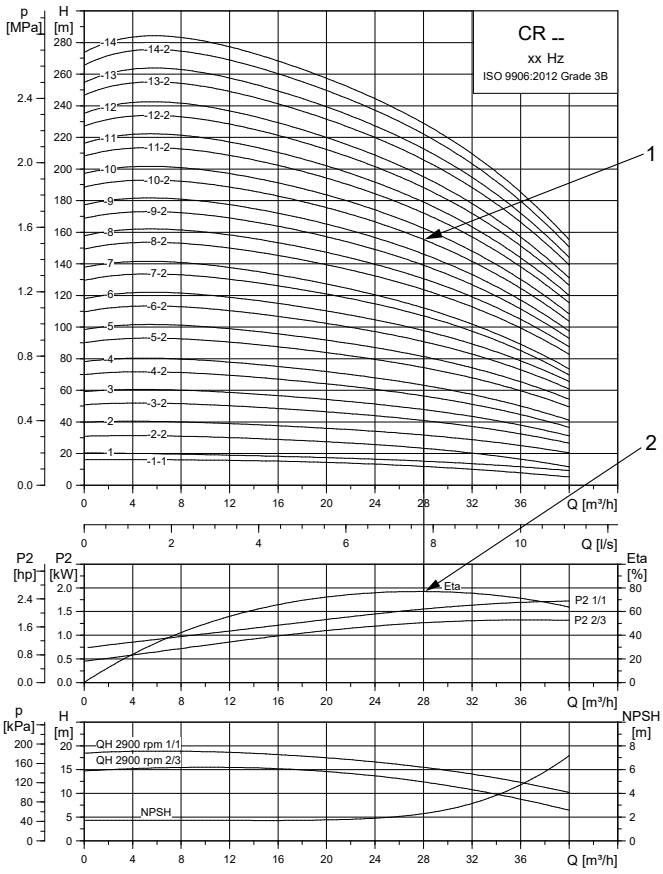

Example of a CR pump's duty point

Pos.	Description
1	Duty point
2	Best efficiency

As the pump is sized on the basis of the highest possible flow rate, it is important to always have the duty point to the right of the best efficiency point on the efficiency curve (eta). This must be considered in order to keep the efficiency high when the flow rate drops.

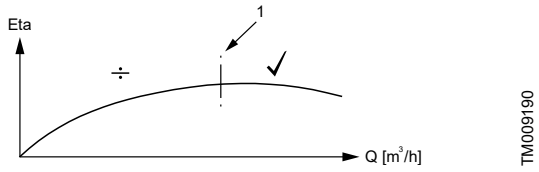

Best efficiency

Pos.	Description
1	Best efficiency point

Pump material

Select the material variant on the basis of the liquid to be pumped.

The product range covers the following basic types:

- CR, CRI: Use CR, CRI pumps for clean, non-aggressive liquids such as potable water and oils.
- CRN: Use CRN pumps for industrial liquids and acids. See the section on pumped liquids, or contact Grundfos.

For saline- or chloride-containing liquids, such as sea water, CRT pumps of titanium are available.

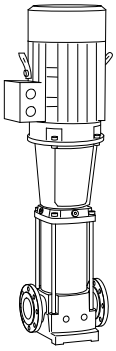

TM012100

CR pump

Pump connections

Selection of a pump connection depends on the rated pressure and pipes. To meet any requirement, the pumps offer a wide range of flexible connections, such as the following:

- oval flange A (BSP)
- DIN flange
- PJE coupling
- clamp coupling
- union (+GF+)
- other connections on request.

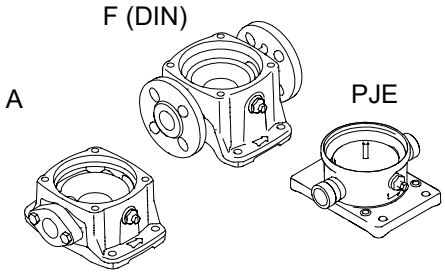

TM021201

Pump connections

Shaft seal

As standard, the product range is fitted with a Grundfos shaft seal (cartridge type) which is suitable for the most common applications.

The following key parameters must be taken into account when selecting the shaft seal:

- type of pumped liquid
- liquid temperature
- maximum pressure.

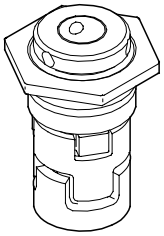

TM020538

Shaft seal (cartridge type)

We offer a wide range of shaft seal variants to meet specific demands according to the pumped liquid.

Servicing shaft seals

Replacement shaft seals are available as complete service kits [30].

Shaft seals fitted on CR, CRN 125-155 pumps with Ø28 mm or Ø36 mm shaft ends are serviceable. This means that the wear parts in these shaft seals are available as service kits [30] and can be replaced without having to renew the complete shaft seal.

Thrust handling device

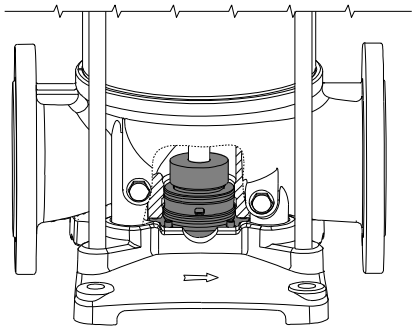

TM069669

Thrust handling device

A thrust handling device (THD) is factory-fitted on pumps with 75 kW motors or larger. The system consists of two parts. A rotating part mounted on the shaft end below the first impeller as well as a non-rotating part mounted in or on the pump base.

The THD absorbs the main part of the thrust force generated by the impellers and thereby reduces the resulting axial force the motor bearings must absorb. This enables the use of standard ball bearings in the motor instead of special angular contact ball bearings.

Note: For applications involving CIP (clean-in-place) and motors above 55 kW, use a bearing flange and a base without THD.

[30] All service kits include detailed instructions on how to carry out the replacement.

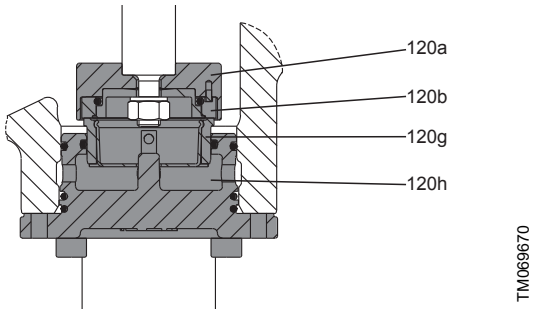

Position numbers for THD parts

Pos.	Description	Material
120a	Thrust disc	Stainless steel
120b	Rotating ring	Silicon carbide
120g	Stationary ring	Silicon carbide [31)] Tungsten carbide
120h	Lifting plate	Stainless steel
-	O-rings	EPDM FKM

[31)] On request for CRN.

Operating pressure and inlet pressure

Do not exceed the limit values for these pressures:

- maximum operating pressure
- maximum inlet pressure.

Minimum inlet pressure, NPSH

We recommend calculating the inlet pressure "H" in these situations:

- The liquid temperature is high.
- The flow rate is significantly higher than the rated flow.
- Water is drawn from depths.
- Water is drawn through long pipes.
- Inlet conditions are poor.

To avoid cavitation, make sure that there is a minimum pressure on the inlet side of the pump.

The maximum suction lift "H" in metres head can be calculated as follows:

H	=	p_b x 10.2 - NPSH - H_f - H_v
p_b	=	Barometric pressure in bar. P_b can be set to 1 bar at sea level. In closed systems, p_b indicates the system pressure in bar.
NPSH	=	Net Positive Suction Head in metres head. To be read from the NPSH curve at the highest flow rate the pump will be delivering.
H_f	=	Friction loss in inlet pipe in metres head at the highest flow rate the pump will be delivering.
H_v	=	Vapour pressure in metres head. To be read from the vapour pressure scale. H_v depends on the liquid temperature t_m.

If the calculated "H" is positive, the pump can operate at a suction lift of maximum "H" metres head.

If the calculated "H" is negative, an inlet pressure of minimum "H" metres head is required.

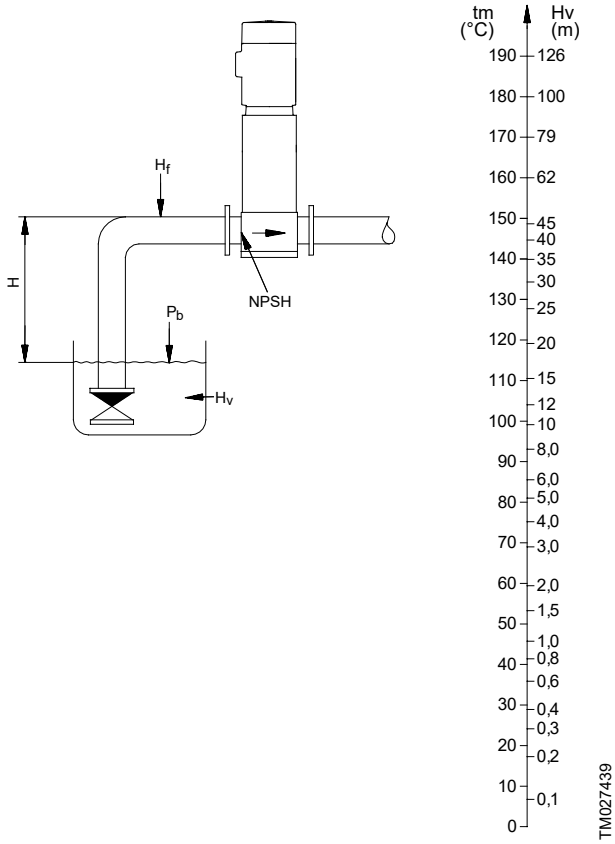

Minimum inlet pressure, NPSH

To avoid cavitation, never select a pump with a duty point too far to the right on the NPSH curve.

Always check the NPSH value of the pump at the highest possible flow rate.

How to read the curve charts

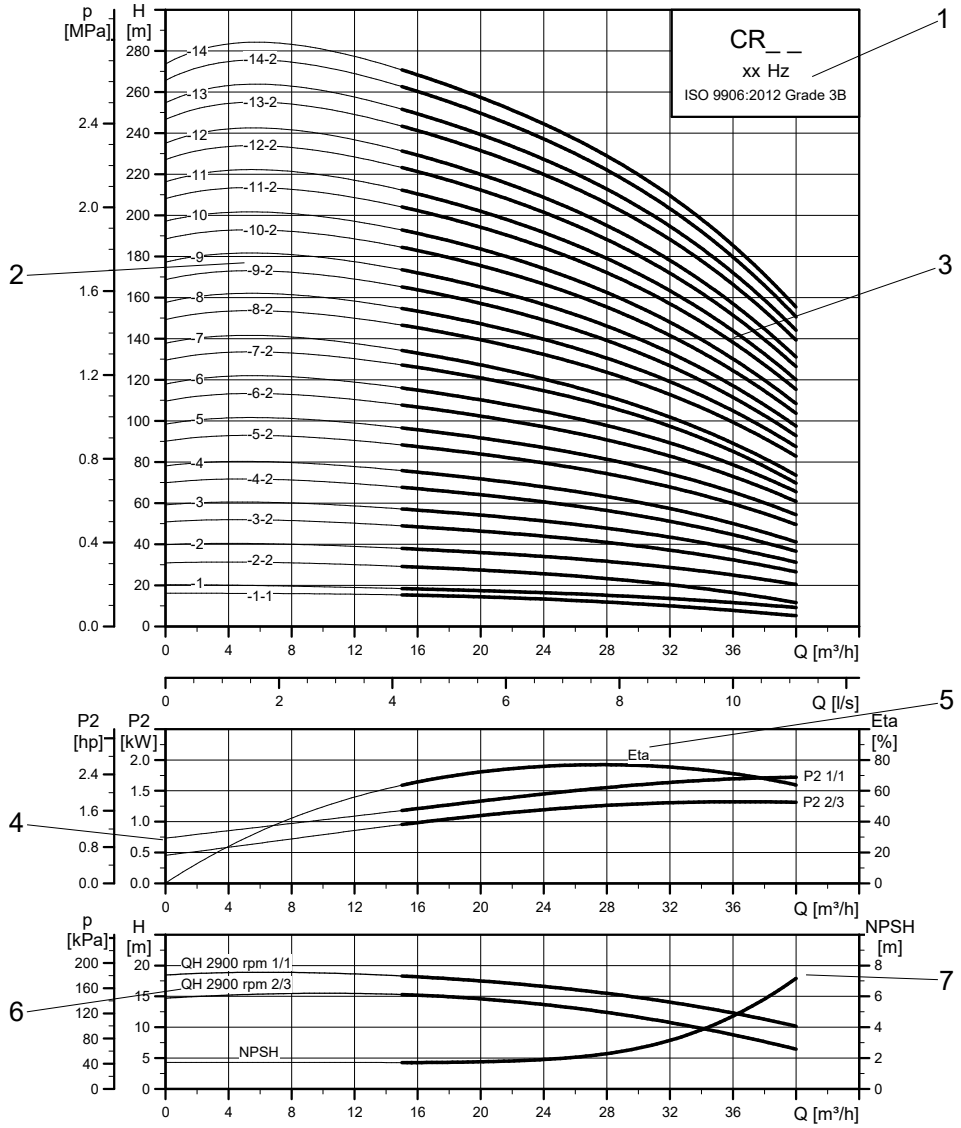

Pos.	Description
1	It shows the pump type, frequency, poles or speed as well as the ISO or ANSI standard.
2	Number of stages. First figure: number of stages. Second figure: number of reduced-diameter impellers.
3	It is the QH curve of the individual pump with the bold curves indicating the recommended duty range for best efficiency.
4	The power curves indicate pump input power **per stage**. Curves are shown for full (1/1) and for reduced-diameter (2/3) impellers.
5	The eta curve shows the efficiency of a pump with an average number of stages. The efficiency of pumps with reduced-diameter impellers is approximately 2 % lower than the eta curve shown in the chart.
6	It is the QH for each individual impeller. Curves are shown for full (1/1) and for reduced-diameter (2/3) impellers.
7	The NPSH curve is a maximum curve for all the variants shown.

Guidelines to performance curves

The guidelines below apply to the performance curves:

- Tolerances to ANSI or ISO standards, such as ISO 9906:2012, Grade 3B, if indicated on the curve chart.
- The motors used for the measurements are standard Grundfos-specified motors.
- Measurements have been made with airless water at a temperature of 20 °C.
- The curves apply to the following kinematic viscosity: υ = 1 mm^2/s (1 cSt).
- Due to risk of overheating, the pumps must not be used at a flow rate below the minimum flow rate.
- The QH curves apply to a rated motor speed of a three-phase mains-operated motor. For realistic curves, go to Grundfos Product Center (http://product-selection.grundfos.com) and insert data.

The curve below shows the minimum flow rate as a percentage of the rated flow rate in relation to the liquid temperature. The dotted line shows a CRN pump fitted with an air-cooled top assembly.

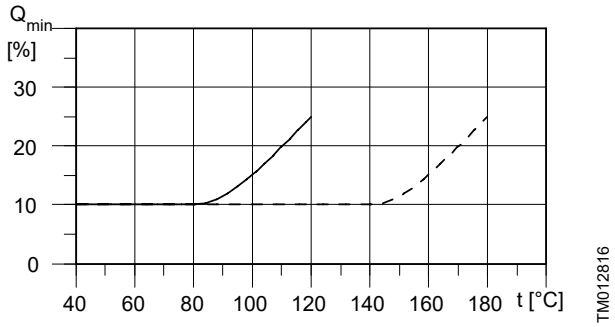

Minimum flow rate

10. Performance curves and technical data

CR 1s

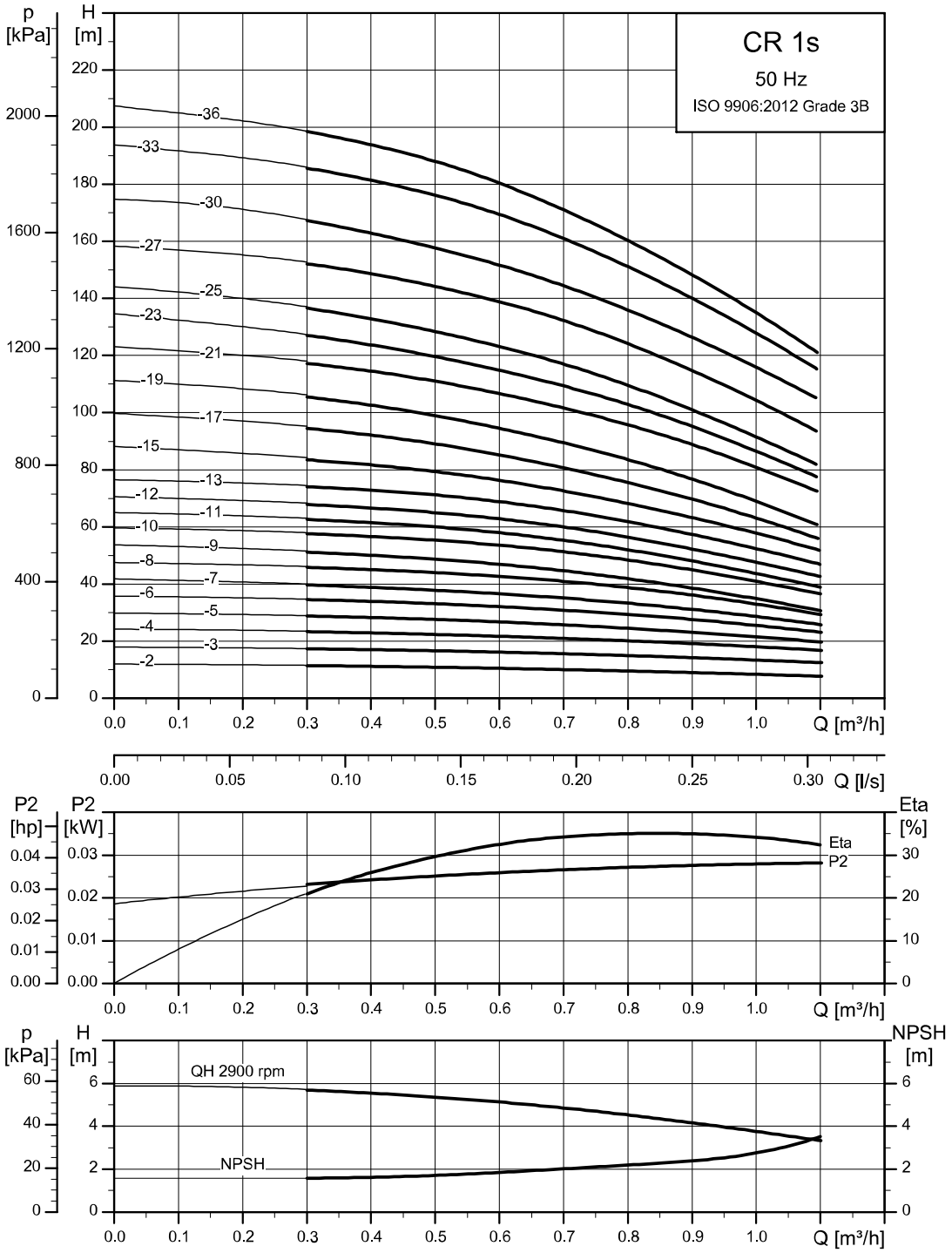

Dimensional sketch

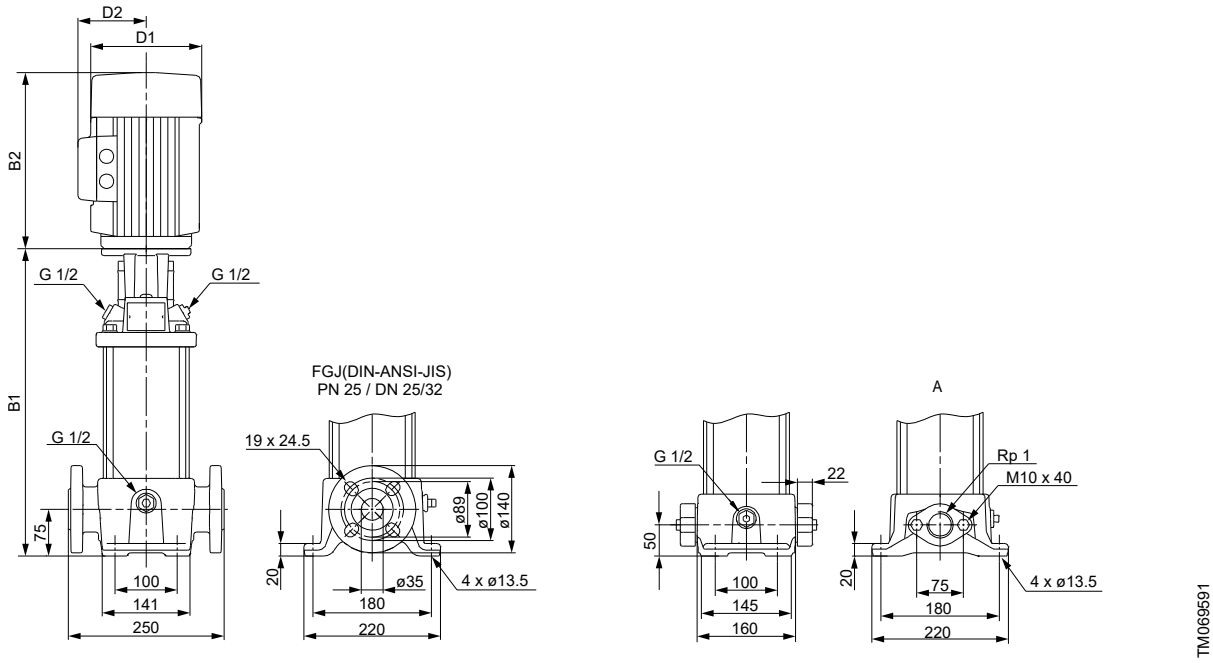

Dimensions and weights

Pump type	Motor P_2 [kW]	Dimension [mm]						Net weight [kg]	
		Oval flange (A)		DIN flange		D1	D2	Oval flange	DIN flange
		B1	B1+B2	B1	B1+B2				
CR 1s-2	0.37	254	445	279	470	141	109	18	23
CR 1s-3	0.37	254	445	279	470	141	109	18	23
CR 1s-4	0.37	272	463	297	488	141	109	19	23
CR 1s-5	0.37	290	481	315	506	141	109	19	24
CR 1s-6	0.37	308	499	333	524	141	109	20	24
CR 1s-7	0.37	326	517	351	542	141	109	20	25
CR 1s-8	0.37	344	535	369	560	141	109	20	25
CR 1s-9	0.37	362	553	387	578	141	109	21	26
CR 1s-10	0.37	380	571	405	596	141	109	21	26
CR 1s-11	0.37	398	589	423	614	141	109	22	26
CR 1s-12	0.37	416	607	441	632	141	109	22	27
CR 1s-13	0.37	434	625	459	650	141	109	22	27
CR 1s-15	0.55	470	661	495	686	141	109	23	27
CR 1s-17	0.55	506	697	531	722	141	109	24	28
CR 1s-19	0.55	542	733	567	758	141	109	24	29
CR 1s-21	0.75	584	815	609	840	141	109	28	33
CR 1s-23	0.75	620	851	645	876	141	109	29	33
CR 1s-25	0.75	656	887	681	912	141	109	30	34
CR 1s-27	1.1	692	943	717	968	141	109	32	37
CR 1s-30	1.1	-	-	771	1022	141	109	-	38
CR 1s-33	1.1	-	-	825	1076	141	109	-	39
CR 1s-36	1.1	-	-	879	1130	141	109	-	41

CRI, CRN 1s

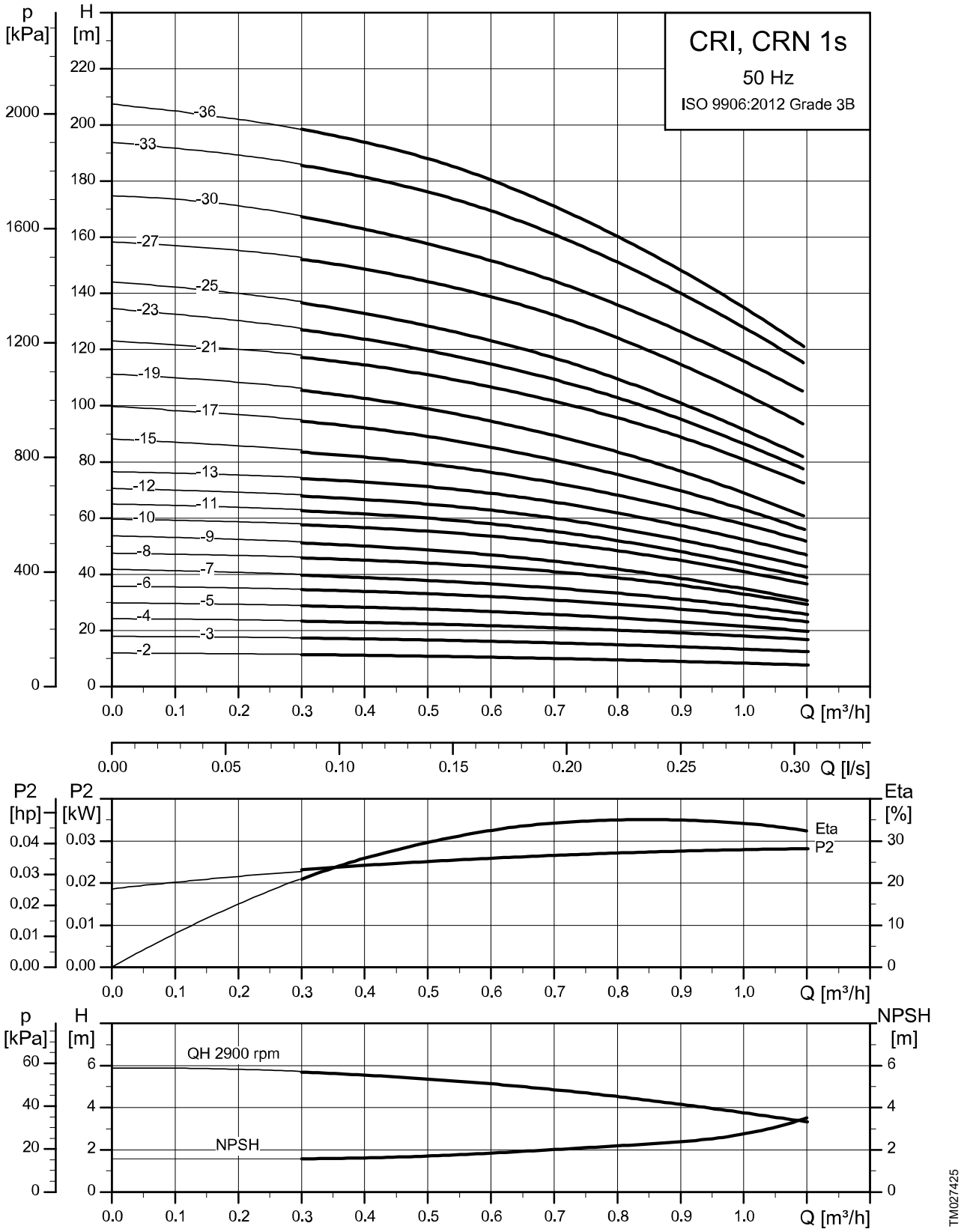
CRI, CRN 1s
50 Hz
ISO 9906:2012 Grade 3B
p [kPa]
H [m]
-36
-33
-30
-27
-25
-23
-21
-19
-17
-15
-13
-12
-11
-10
-9
-8
-7
-6
-5
-4
-3
-2
Q [m³/h]
Q [l/s]
P2 [hp]
P2 [kW]
Eta [%]
Eta
P2
QH 2900 rpm
NPSH
NPSH [m]
TM027425

Dimensional sketch

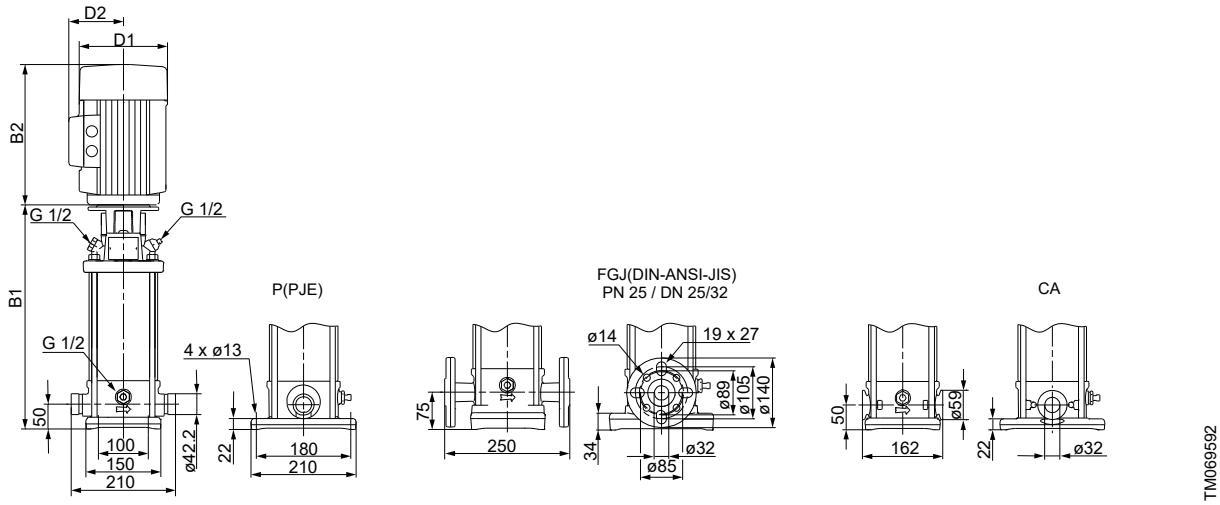

Dimensions and weights

Pump type	Motor P_2 [kW]	Dimension [mm]						Net weight [kg]	
		PJE/CA		DIN flange		D1	D2	PJE/CA	DIN flange
		B1	B1+B2	B1	B1+B2				
CRI/CRN 1s-2	0.37	257	448	282	473	141	109	16	20
CRI/CRN 1s-3	0.37	257	448	282	473	141	109	17	21
CRI/CRN 1s-4	0.37	275	466	300	491	141	109	17	21
CRI/CRN 1s-5	0.37	293	484	318	509	141	109	17	22
CRI/CRN 1s-6	0.37	311	502	336	527	141	109	18	22
CRI/CRN 1s-7	0.37	329	520	354	545	141	109	18	22
CRI/CRN 1s-8	0.37	347	538	372	563	141	109	19	23
CRI/CRN 1s-9	0.37	365	556	390	581	141	109	19	23
CRI/CRN 1s-10	0.37	383	574	408	599	141	109	19	24
CRI/CRN 1s-11	0.37	401	592	426	617	141	109	20	24
CRI/CRN 1s-12	0.37	419	610	444	635	141	109	20	24
CRI/CRN 1s-13	0.37	437	628	462	653	141	109	21	25
CRI/CRN 1s-15	0.55	473	664	498	689	141	109	21	25
CRI/CRN 1s-17	0.55	509	700	534	725	141	109	22	26
CRI/CRN 1s-19	0.55	545	736	570	761	141	109	22	27
CRI/CRN 1s-21	0.75	587	818	612	843	141	109	27	31
CRI/CRN 1s-23	0.75	623	854	648	879	141	109	27	32
CRI/CRN 1s-25	0.75	659	890	684	915	141	109	28	32
CRI/CRN 1s-27	1.1	695	946	720	971	141	109	31	35
CRI/CRN 1s-30	1.1	749	1000	774	1025	141	109	32	36
CRI/CRN 1s-33	1.1	803	1054	828	1079	141	109	33	38
CRI/CRN 1s-36	1.1	857	1108	882	1133	141	109	35	39

CR 1

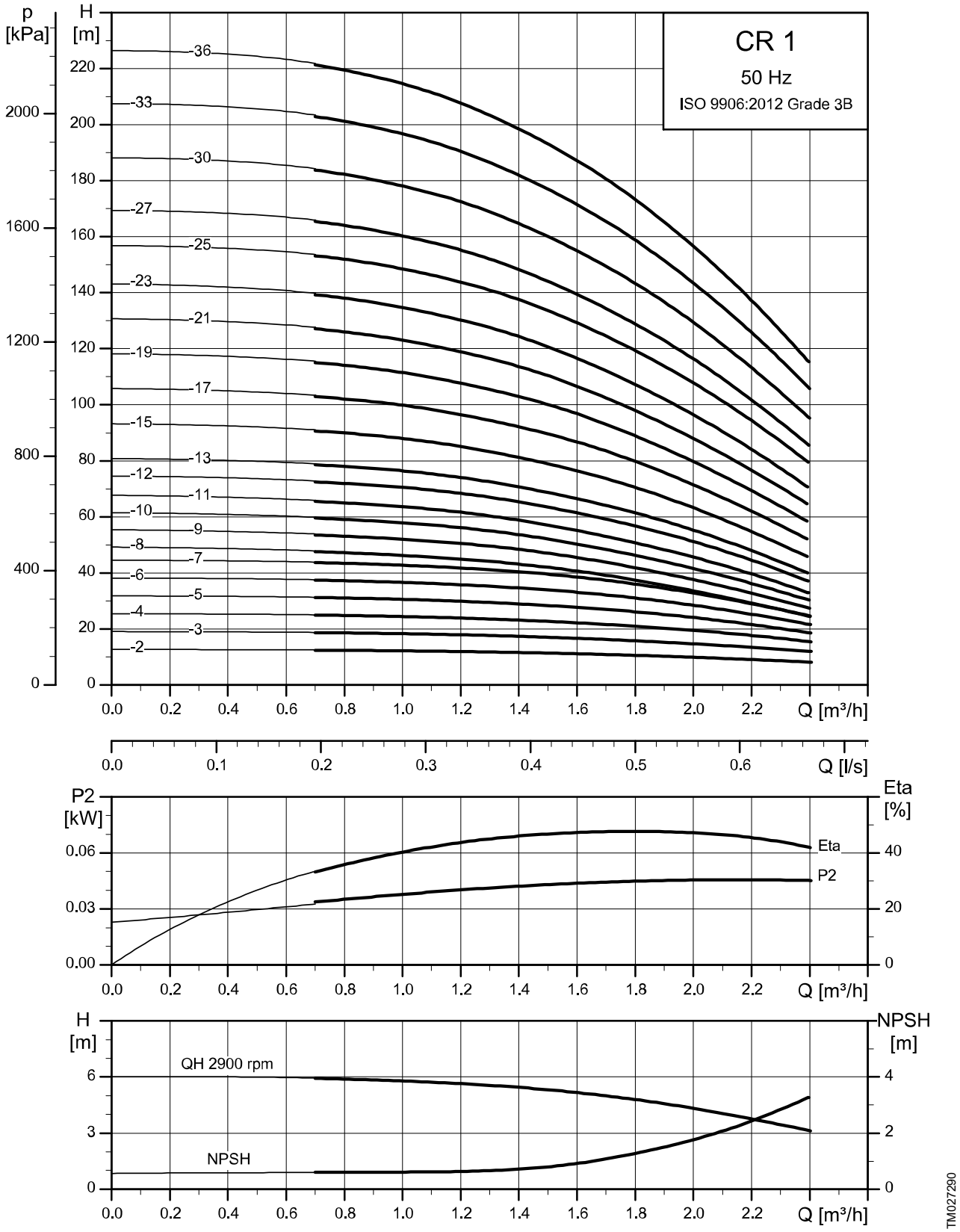
CR 1
50 Hz
ISO 9906:2012 Grade 3B
p [kPa]
H [m]
-36
-33
-30
-27
-25
-23
-21
-19
-17
-15
-13
-12
-11
-10
-9
-8
-7
-6
-5
-4
-3
-2
Q [m³/h]
Q [l/s]
P2 [kW]
Eta [%]
Eta
P2
H [m]
NPSH [m]
QH 2900 rpm
NPSH
TM027290

Dimensional sketch

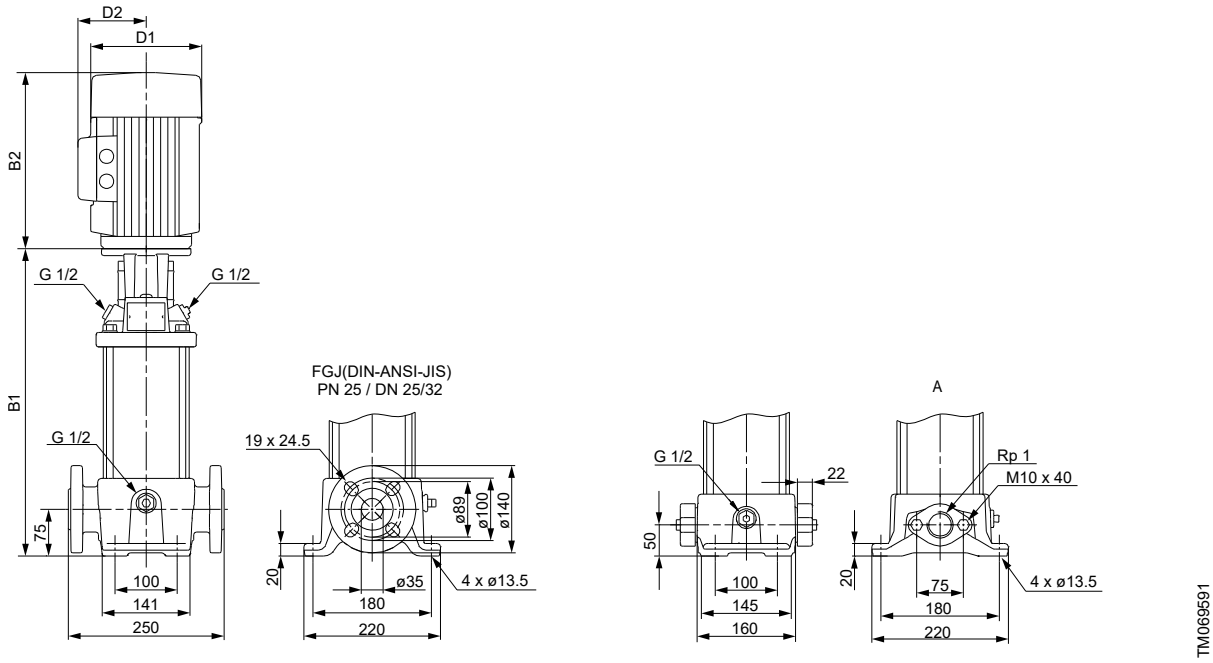

Dimensions and weights

Pump type	Motor P_2 [kW]	Dimension [mm]						Net weight [kg]	
		Oval flange (A)		DIN flange		D1	D2	Oval flange	DIN flange
		B1	B1+B2	B1	B1+B2				
CR 1-2	0.37	254	445	279	470	141	109	18	23
CR 1-3	0.37	254	445	279	470	141	109	18	23
CR 1-4	0.37	272	463	297	488	141	109	19	23
CR 1-5	0.37	290	481	315	506	141	109	19	24
CR 1-6	0.37	308	499	333	524	141	109	20	24
CR 1-7	0.37	326	517	351	542	141	109	20	25
CR 1-8	0.55	344	535	369	560	141	109	20	25
CR 1-9	0.55	362	553	387	578	141	109	20	25
CR 1-10	0.55	380	571	405	596	141	109	21	25
CR 1-11	0.55	398	589	423	614	141	109	21	26
CR 1-12	0.75	422	653	447	678	141	109	25	29
CR 1-13	0.75	440	671	465	696	141	109	25	30
CR 1-15	0.75	476	707	501	732	141	109	26	30
CR 1-17	1.1	512	763	537	788	141	109	29	33
CR 1-19	1.1	548	799	573	824	141	109	30	34
CR 1-21	1.1	584	835	609	860	141	109	30	35
CR 1-23	1.1	620	871	645	896	141	109	31	36
CR 1-25	1.5	-	-	697	978	178	110	-	43
CR 1-27	1.5	-	-	733	1014	178	110	-	44
CR 1-30	1.5	-	-	787	1068	178	110	-	45
CR 1-33	2.2	-	-	841	1162	178	110	-	50
CR 1-36	2.2	-	-	895	1216	178	110	-	51

CRI, CRN 1

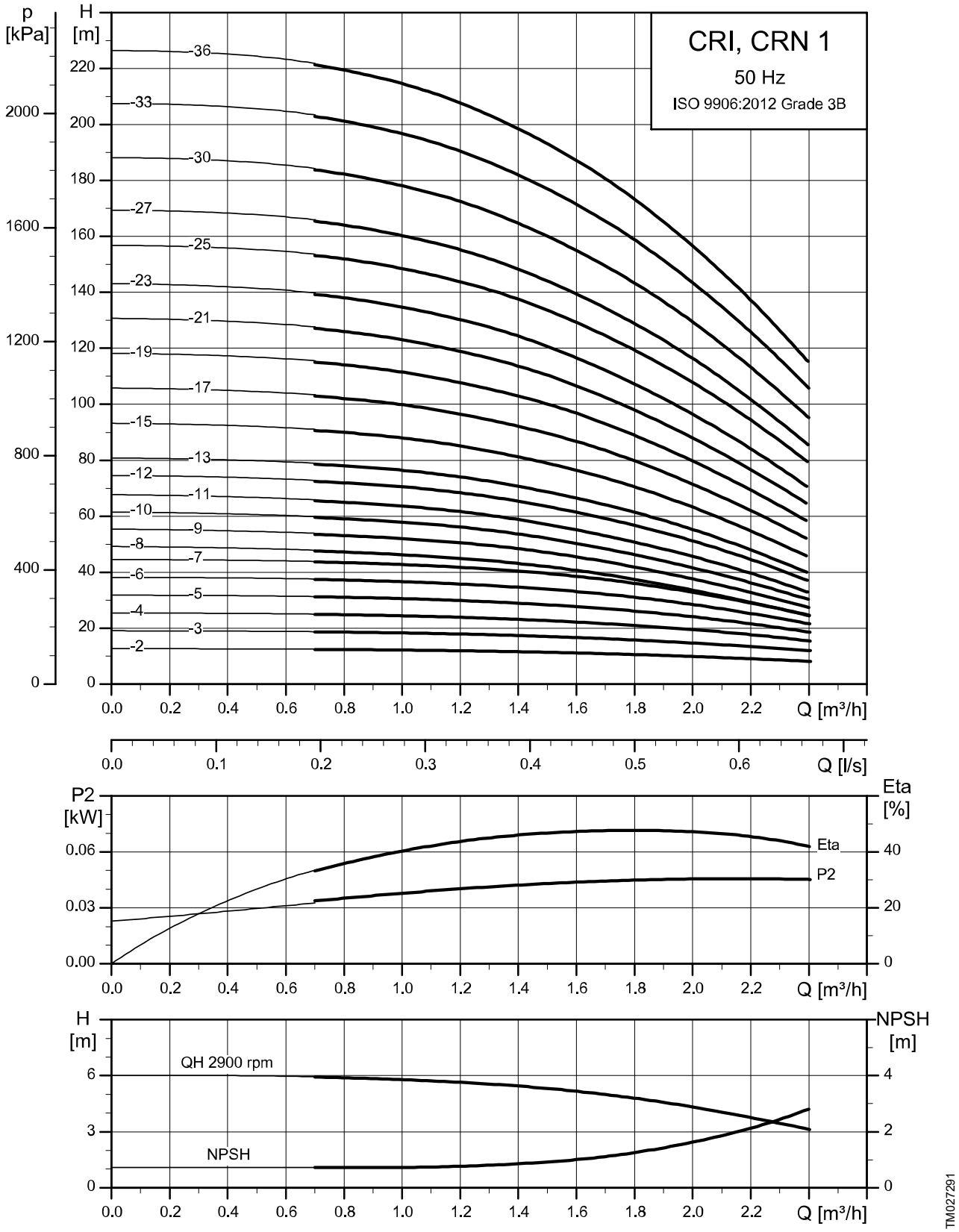
CRI, CRN 1
50 Hz
ISO 9906:2012 Grade 3B
p [kPa]
H [m]
-36
-33
-30
-27
-25
-23
-21
-19
-17
-15
-13
-12
-11
-10
-9
-8
-7
-6
-5
-4
-3
-2
Q [m³/h]
Q [l/s]
P2 [kW]
Eta [%]
Eta
P2
H [m]
NPSH [m]
QH 2900 rpm
NPSH
TM027291

Dimensional sketch

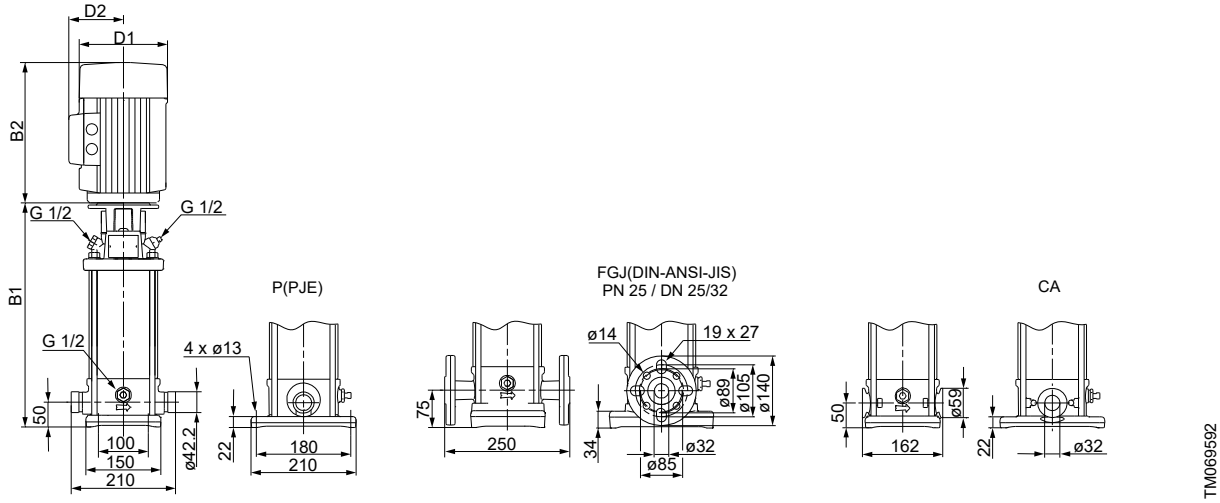

Dimensions and weights

Pump type	Motor P_2 [kW]	Dimension [mm]						Net weight [kg]	
		PJE/CA		DIN flange		D1	D2	PJE/CA	DIN flange
		B1	B1+B2	B1	B1+B2				
CRI/CRN 1-2	0.37	257	448	282	473	141	109	16	21
CRI/CRN 1-3	0.37	257	448	282	473	141	109	17	21
CRI/CRN 1-4	0.37	275	466	300	491	141	109	17	21
CRI/CRN 1-5	0.37	293	484	318	509	141	109	17	22
CRI/CRN 1-6	0.37	311	502	336	527	141	109	18	22
CRI/CRN 1-7	0.37	329	520	354	545	141	109	18	22
CRI/CRN 1-8	0.55	347	538	372	563	141	109	18	22
CRI/CRN 1-9	0.55	365	556	390	581	141	109	19	23
CRI/CRN 1-10	0.55	383	574	408	599	141	109	19	23
CRI/CRN 1-11	0.55	401	592	426	617	141	109	19	23
CRI/CRN 1-12	0.75	425	656	450	681	141	109	23	27
CRI/CRN 1-13	0.75	443	674	468	699	141	109	24	28
CRI/CRN 1-15	0.75	479	710	504	735	141	109	24	29
CRI/CRN 1-17	1.1	515	766	540	791	141	109	27	31
CRI/CRN 1-19	1.1	551	802	576	827	141	109	28	32
CRI/CRN 1-21	1.1	587	838	612	863	141	109	29	33
CRI/CRN 1-23	1.1	623	874	648	899	141	109	30	34
CRI/CRN 1-25	1.5	675	956	700	981	178	110	36	40
CRI/CRN 1-27	1.5	711	992	736	1017	178	110	37	41
CRI/CRN 1-30	1.5	765	1046	790	1071	178	110	38	43
CRI/CRN 1-33	2.2	819	1140	844	1165	178	110	43	48
CRI/CRN 1-36	2.2	873	1194	898	1219	178	110	45	49

CR 3

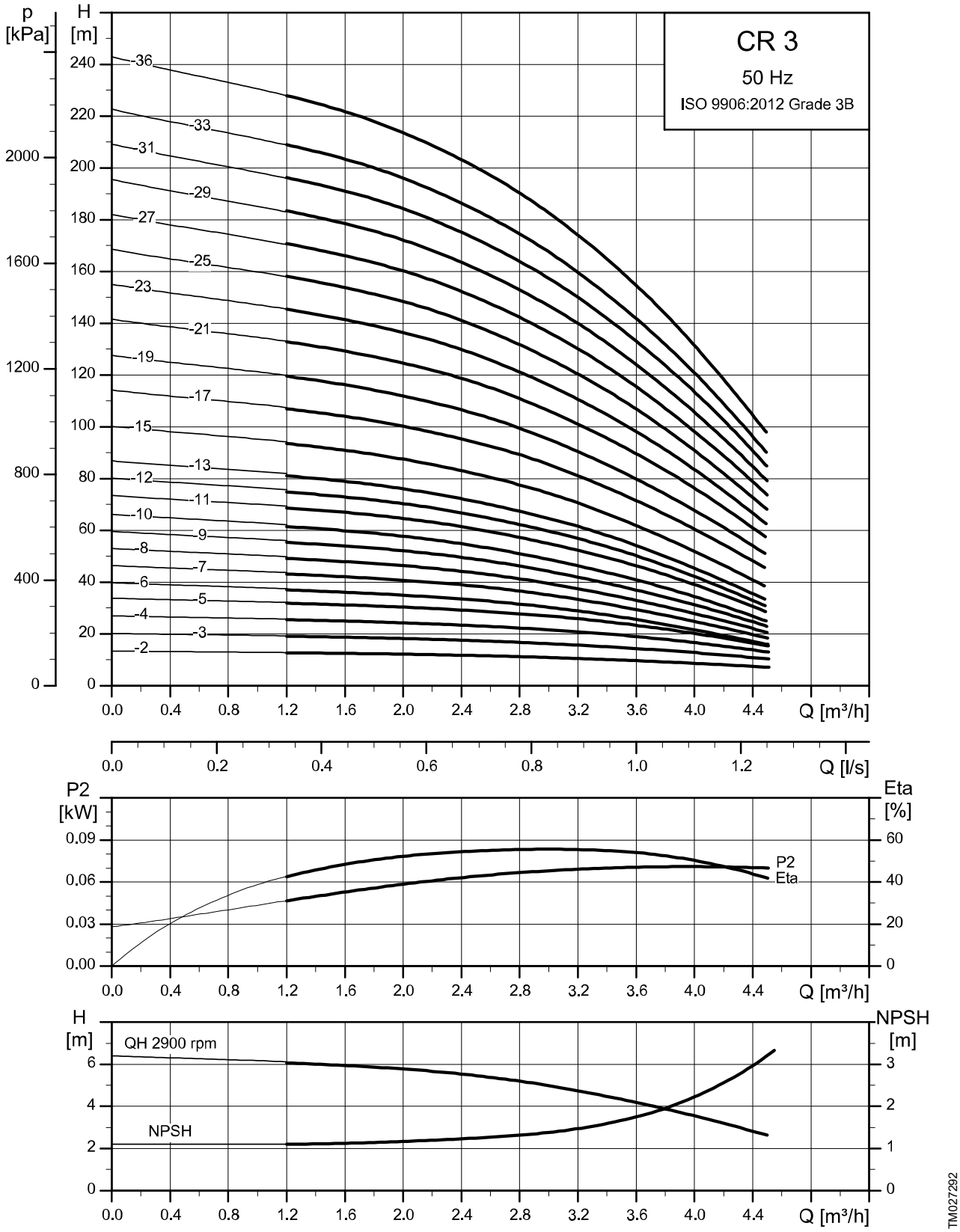
CR 3
50 Hz
ISO 9906:2012 Grade 3B
p [kPa]
H [m]
-36
-33
-31
-29
-27
-25
-23
-21
-19
-17
-15
-13
-12
-11
-10
-9
-8
-7
-6
-5
-4
-3
-2
Q [m³/h]
Q [l/s]
P2 [kW]
Eta [%]
P2
Eta
H [m]
NPSH [m]
QH 2900 rpm
NPSH
TM027292

Dimensional sketch

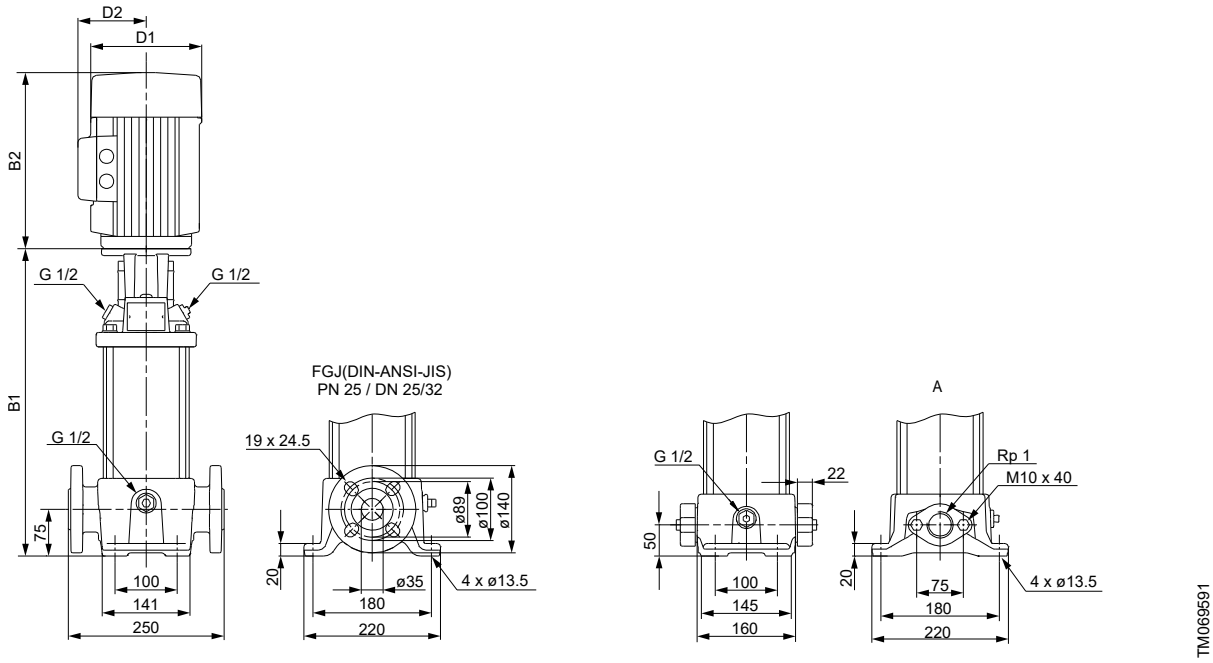

Dimensions and weights

Pump type	Motor P_2 [kW]	Dimension [mm]						Net weight [kg]	
		Oval flange (A)		DIN flange		D1	D2	Oval flange	DIN flange
		B1	B1+B2	B1	B1+B2				
CR 3-2	0.37	254	445	279	470	141	109	18	23
CR 3-3	0.37	254	445	279	470	141	109	18	23
CR 3-4	0.37	272	463	297	488	141	109	19	23
CR 3-5	0.37	290	481	315	506	141	109	19	24
CR 3-6	0.55	308	499	333	524	141	109	19	24
CR 3-7	0.55	326	517	351	542	141	109	20	24
CR 3-8	0.75	350	581	375	606	141	109	23	28
CR 3-9	0.75	368	599	393	624	141	109	23	28
CR 3-10	0.75	386	617	411	642	141	109	24	28
CR 3-11	1.1	404	655	429	680	141	109	26	31
CR 3-12	1.1	422	673	447	698	141	109	27	31
CR 3-13	1.1	440	691	465	716	141	109	27	32
CR 3-15	1.1	476	727	501	752	141	109	28	32
CR 3-17	1.5	528	809	553	834	178	110	35	40
CR 3-19	1.5	564	845	589	870	178	110	36	41
CR 3-21	2.2	600	921	625	946	178	110	41	45
CR 3-23	2.2	636	957	661	982	178	110	41	46
CR 3-25	2.2	-	-	697	1018	178	110	-	47
CR 3-27	2.2	-	-	733	1054	178	110	-	48
CR 3-29	2.2	-	-	769	1090	178	110	-	49
CR 3-31	3	-	-	809	1144	198	120	-	54
CR 3-33	3	-	-	845	1180	198	120	-	55
CR 3-36	3	-	-	899	1234	198	120	-	57

CRI, CRN 3

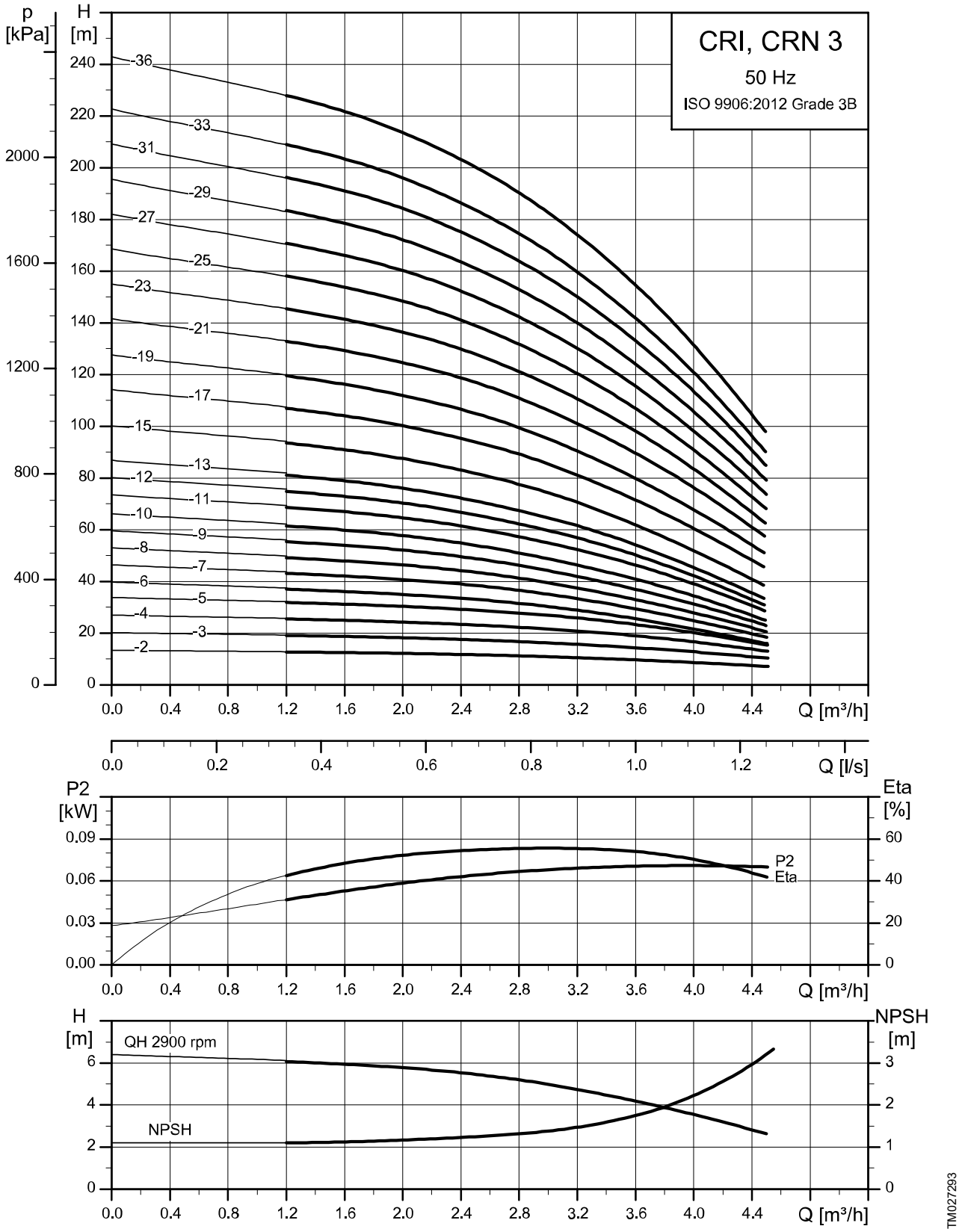
CRI, CRN 3
50 Hz
ISO 9906:2012 Grade 3B
p [kPa]
H [m]
-36
-33
-31
-29
-27
-25
-23
-21
-19
-17
-15
-13
-12
-11
-10
-9
-8
-7
-6
-5
-4
-3
-2
Q [m³/h]
Q [l/s]
P2 [kW]
Eta [%]
P2
Eta
H [m]
NPSH [m]
QH 2900 rpm
NPSH
TM027293

Dimensional sketch

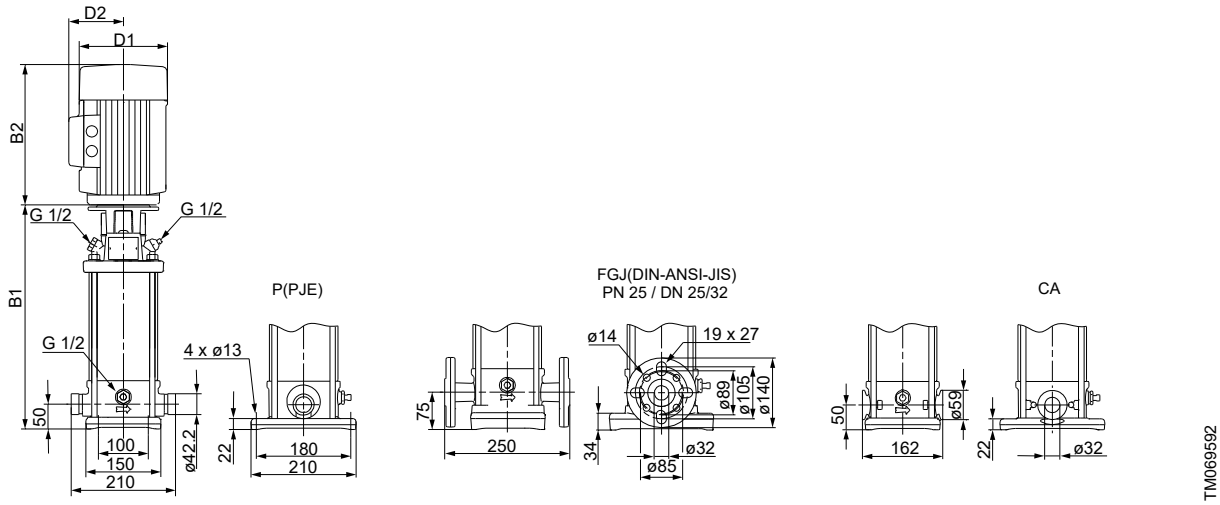

Dimensions and weights

Pump type	Motor P_2 [kW]	Dimension [mm]						Net weight [kg]	
		PJE/CA		DIN flange		D1	D2	PJE/CA	DIN flange
		B1	B1+B2	B1	B1+B2				
CRI/CRN 3-2	0.37	257	448	282	473	141	109	16	21
CRI/CRN 3-3	0.37	257	448	282	473	141	109	17	21
CRI/CRN 3-4	0.37	275	466	300	491	141	109	17	21
CRI/CRN 3-5	0.37	293	484	318	509	141	109	17	22
CRI/CRN 3-6	0.55	311	502	336	527	141	109	17	22
CRI/CRN 3-7	0.55	329	520	354	545	141	109	18	22
CRI/CRN 3-8	0.75	353	584	378	609	141	109	22	26
CRI/CRN 3-9	0.75	371	602	396	627	141	109	22	26
CRI/CRN 3-10	0.75	389	620	414	645	141	109	22	27
CRI/CRN 3-11	1.1	407	658	432	683	141	109	25	29
CRI/CRN 3-12	1.1	425	676	450	701	141	109	25	29
CRI/CRN 3-13	1.1	443	694	468	719	141	109	26	30
CRI/CRN 3-15	1.1	479	730	504	755	141	109	26	31
CRI/CRN 3-17	1.5	531	812	556	837	178	110	33	37
CRI/CRN 3-19	1.5	567	848	592	873	178	110	34	38
CRI/CRN 3-21	2.2	603	924	628	949	178	110	39	43
CRI/CRN 3-23	2.2	639	960	664	985	178	110	39	43
CRI/CRN 3-25	2.2	675	996	700	1021	178	110	40	44
CRI/CRN 3-27	2.2	711	1032	736	1057	178	110	41	45
CRI/CRN 3-29	2.2	747	1068	772	1093	178	110	42	46
CRI/CRN 3-31	3	788	1123	813	1148	198	120	48	52
CRI/CRN 3-33	3	824	1159	849	1184	198	120	49	53
CRI/CRN 3-36	3	878	1213	903	1238	198	120	50	54

CR 5

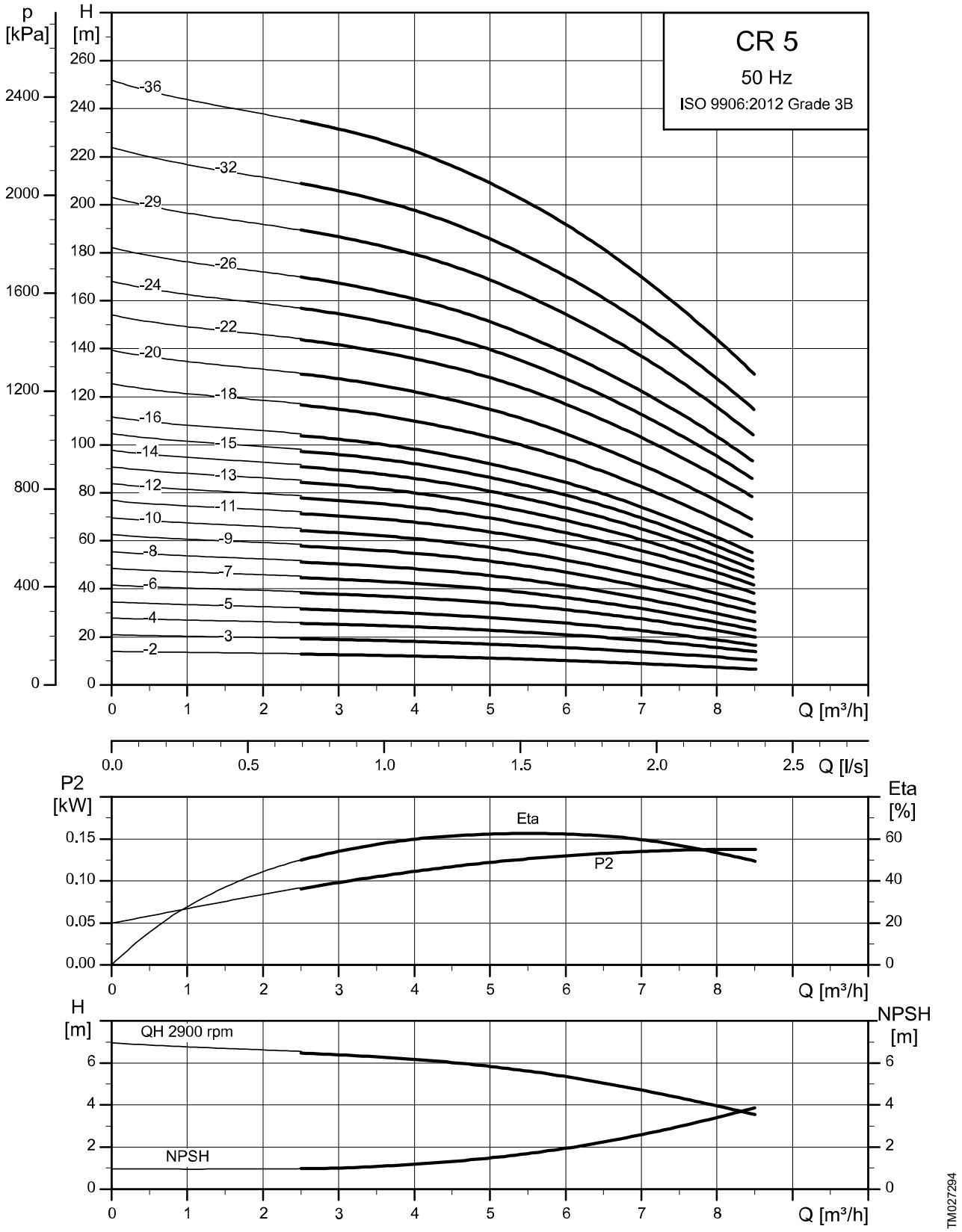
CR 5
50 Hz
ISO 9906:2012 Grade 3B
p [kPa]
H [m]
-36
-32
-29
-26
-24
-22
-20
-18
-16
-15
-14
-13
-12
-11
-10
-9
-8
-7
-6
-5
-4
-3
-2
Q [m³/h]
Q [l/s]
P2 [kW]
Eta [%]
Eta
P2
H [m]
NPSH [m]
QH 2900 rpm
NPSH
TM027294

Dimensional sketch

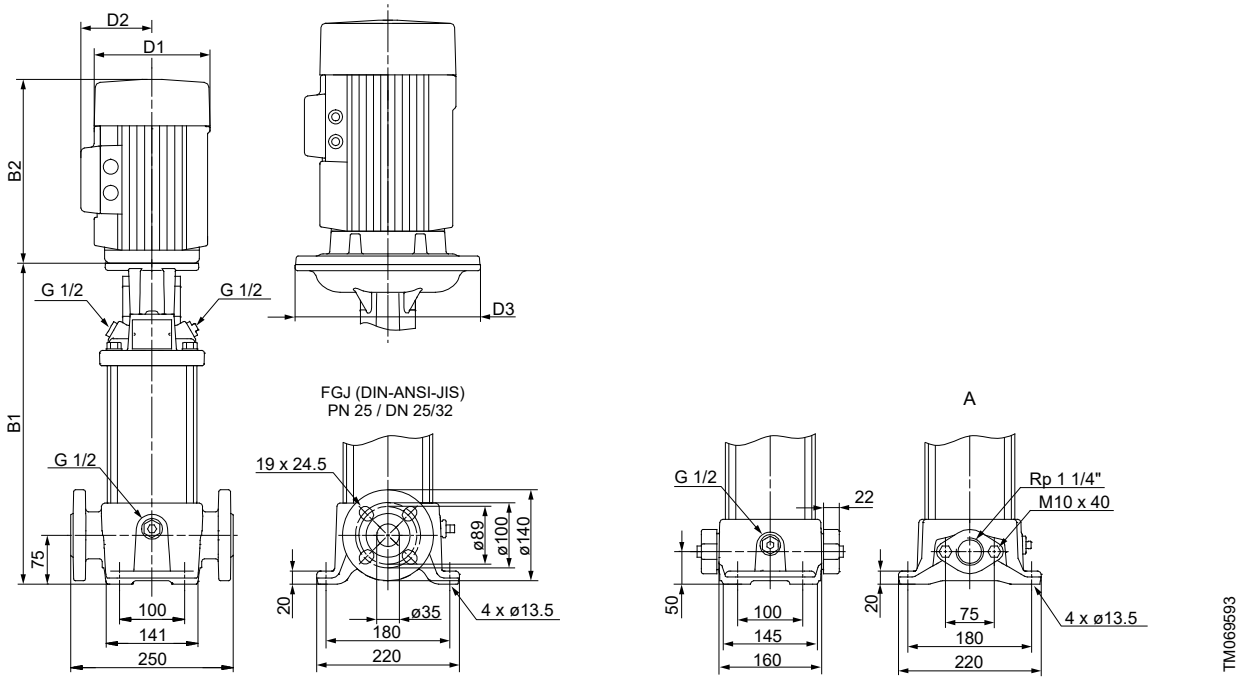

Dimensions and weights

Pump type	Motor P_2 [kW]	Dimension [mm]							Net weight [kg]	
		Oval flange (A)		DIN flange		D1	D2	D3	Oval flange	DIN flange
		B1	B1+B2	B1	B1+B2					
CR 5-2	0.37	254	445	279	470	141	109	-	18	23
CR 5-3	0.55	281	472	306	497	141	109	-	19	23
CR 5-4	0.55	308	499	333	524	141	109	-	19	24
CR 5-5	0.75	341	572	366	597	141	109	-	23	27
CR 5-6	1.1	368	619	393	644	141	109	-	25	30
CR 5-7	1.1	395	646	420	671	141	109	-	26	30
CR 5-8	1.1	422	673	447	698	141	109	-	26	31
CR 5-9	1.5	465	746	490	771	178	110	-	33	38
CR 5-10	1.5	492	773	517	798	178	110	-	34	39
CR 5-11	2.2	519	840	544	865	178	110	-	38	43
CR 5-12	2.2	546	867	571	892	178	110	-	39	44
CR 5-13	2.2	573	894	598	919	178	110	-	40	44
CR 5-14	2.2	600	921	625	946	178	110	-	40	45
CR 5-15	2.2	627	948	652	973	178	110	-	41	45
CR 5-16	2.2	654	975	679	1000	178	110	-	41	46
CR 5-18	3	712	1047	737	1072	198	120	-	48	52
CR 5-20	3	766	1101	791	1126	198	120	-	49	53
CR 5-22	4	820	1192	845	1217	220	134	-	62	66
CR 5-24	4	-	-	899	1271	220	134	-	-	67
CR 5-26	4	-	-	953	1325	220	134	-	-	69
CR 5-29	4	-	-	1034	1406	220	134	-	-	70
CR 5-32	5.5	-	-	1145	1536	220	134	300	-	83
CR 5-36	5.5	-	-	1253	1644	220	134	300	-	85

CRI, CRN 5

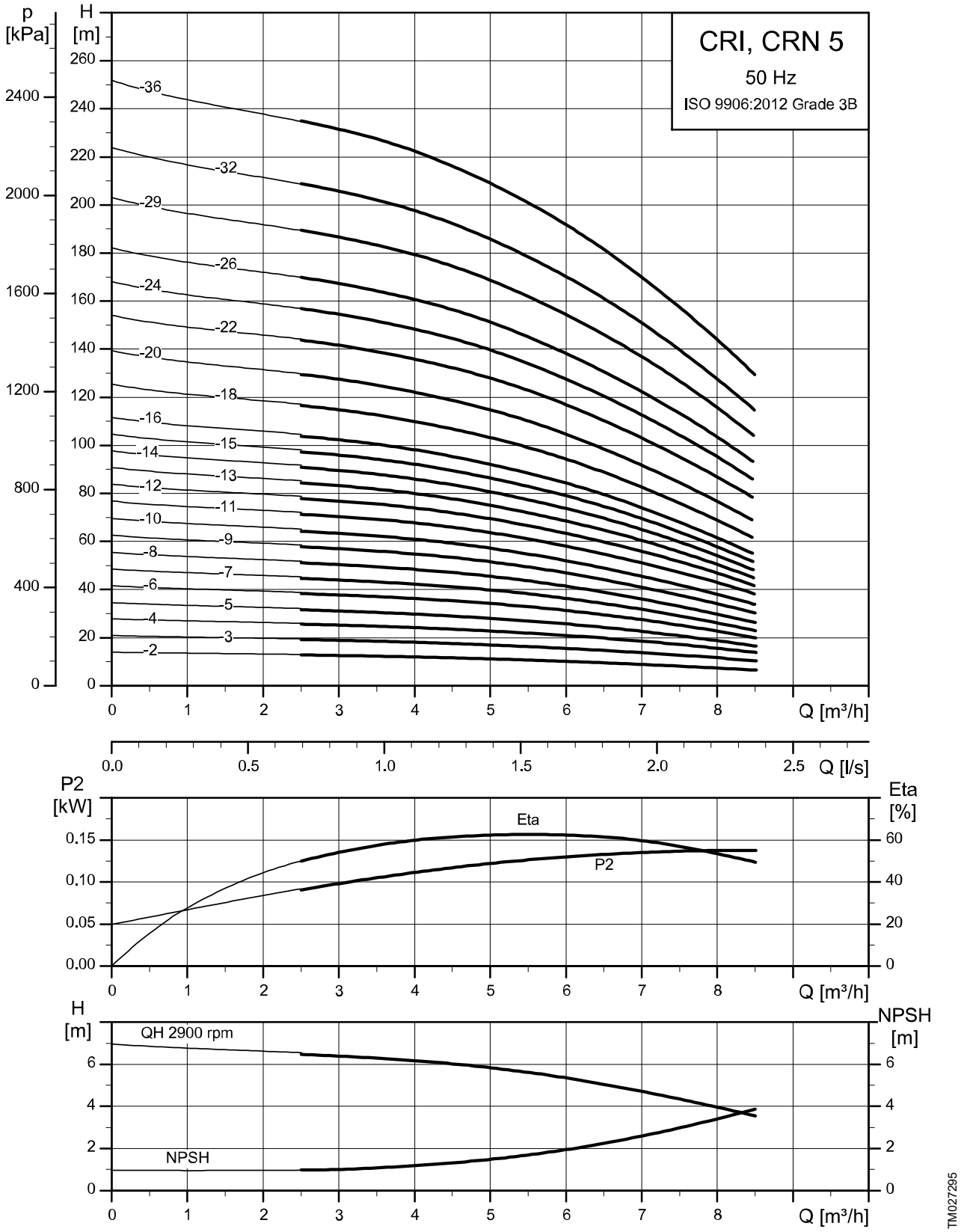
CRI, CRN 5
50 Hz
ISO 9906:2012 Grade 3B
p [kPa]
H [m]
-36
-32
-29
-26
-24
-22
-20
-18
-16
-15
-14
-13
-12
-11
-10
-9
-8
-7
-6
-5
-4
-3
-2
Q [m³/h]
Q [l/s]
P2 [kW]
Eta [%]
Eta
P2
H [m]
NPSH [m]
QH 2900 rpm
NPSH
TM027295

Dimensional sketch

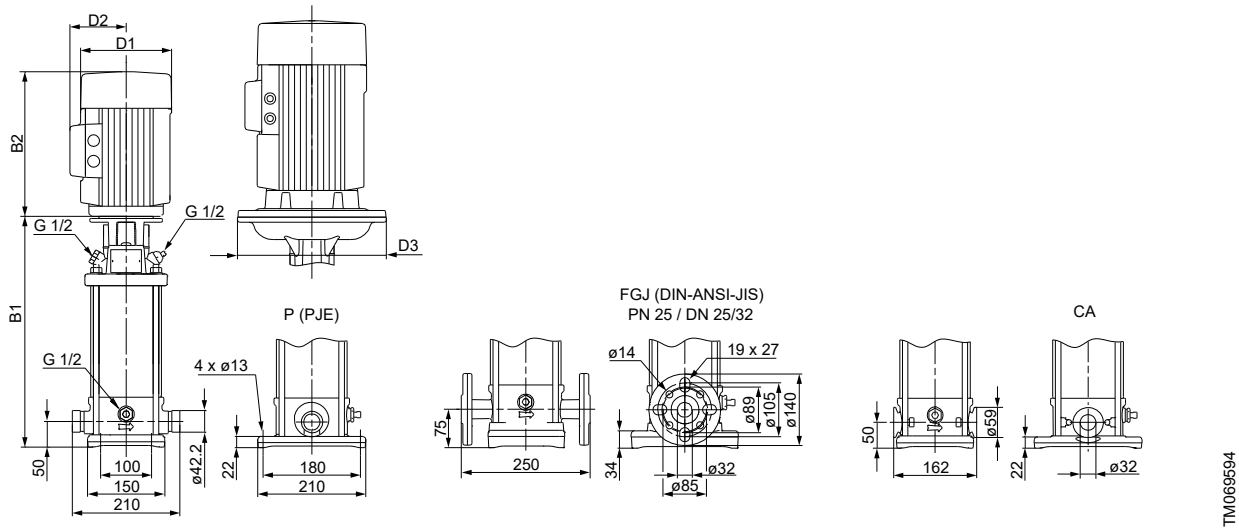

Dimensions and weights

Pump type	Motor P_2 [kW]	Dimension [mm]							Net weight [kg]	
		PJE/CA		DIN flange		D1	D2	D3	PJE/CA	DIN flange
		B1	B1+B2	B1	B1+B2					
CRI/CRN 5-2	0.37	257	448	282	473	141	109	-	17	21
CRI/CRN 5-3	0.55	284	475	309	500	141	109	-	17	21
CRI/CRN 5-4	0.55	311	502	336	527	141	109	-	17	21
CRI/CRN 5-5	0.75	344	575	369	600	141	109	-	21	25
CRI/CRN 5-6	1.1	371	622	396	647	141	109	-	24	28
CRI/CRN 5-7	1.1	398	649	423	674	141	109	-	24	29
CRI/CRN 5-8	1.1	425	676	450	701	141	109	-	25	29
CRI/CRN 5-9	1.5	468	749	493	774	178	110	-	31	36
CRI/CRN 5-10	1.5	495	776	520	801	178	110	-	32	36
CRI/CRN 5-11	2.2	522	843	547	868	178	110	-	36	40
CRI/CRN 5-12	2.2	549	870	574	895	178	110	-	37	41
CRI/CRN 5-13	2.2	576	897	601	922	178	110	-	37	42
CRI/CRN 5-14	2.2	603	924	628	949	178	110	-	38	42
CRI/CRN 5-15	2.2	630	951	655	976	178	110	-	39	43
CRI/CRN 5-16	2.2	657	978	682	1003	178	110	-	39	43
CRI/CRN 5-18	3	716	1051	741	1076	198	120	-	46	50
CRI/CRN 5-20	3	770	1105	795	1130	198	120	-	47	51
CRI/CRN 5-22	4	824	1196	849	1221	220	134	-	60	64
CRI/CRN 5-24	4	878	1250	903	1275	220	134	-	61	65
CRI/CRN 5-26	4	932	1304	957	1329	220	134	-	62	66
CRI/CRN 5-29	4	1013	1385	1038	1410	220	134	-	64	68
CRI/CRN 5-32	5.5	1123	1514	1148	1539	220	134	300	76	80
CRI/CRN 5-36	5.5	1231	1622	1256	1647	220	134	300	78	82

CR 10

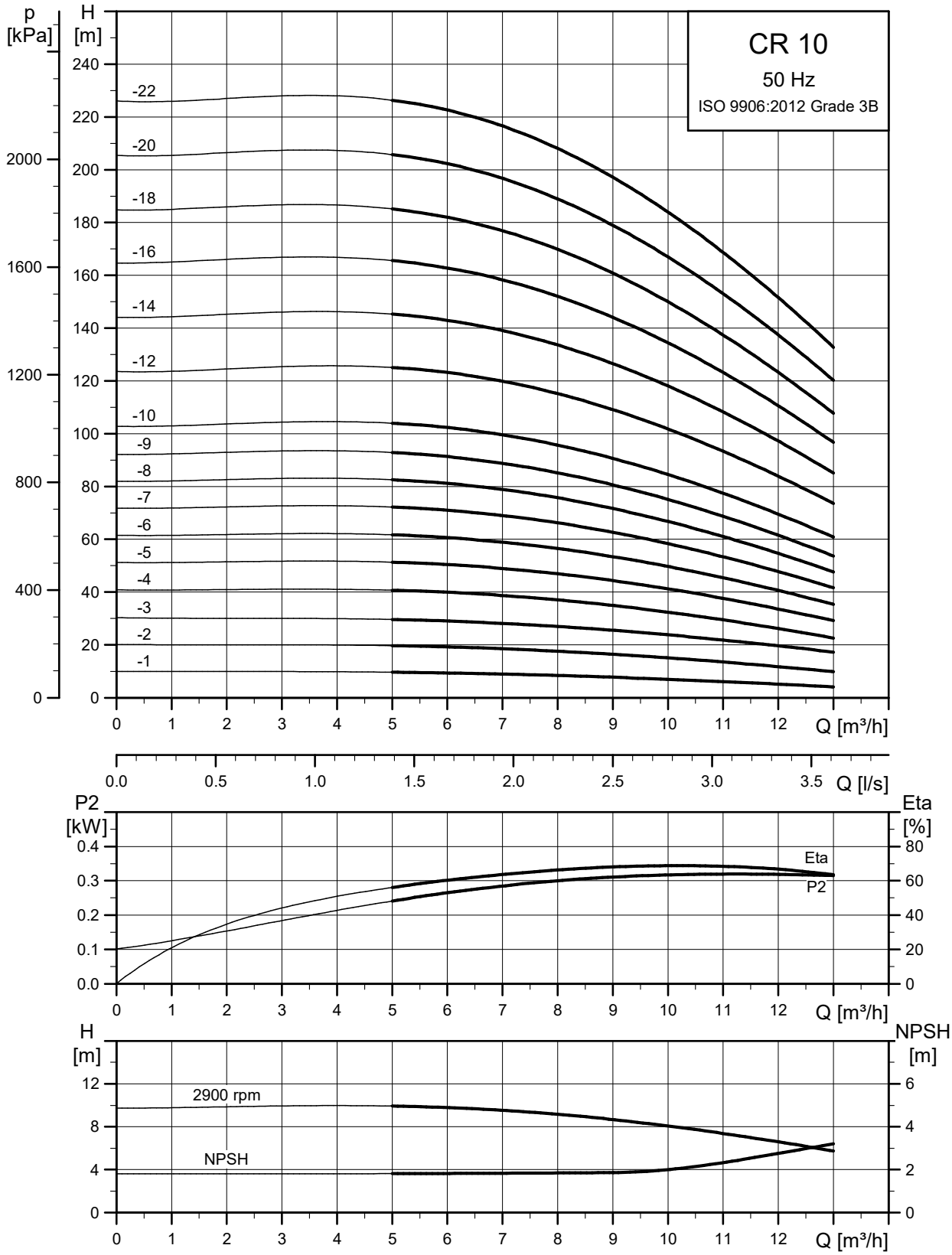
CR 10
50 Hz
ISO 9906:2012 Grade 3B
p [kPa]
H [m]
-22
-20
-18
-16
-14
-12
-10
-9
-8
-7
-6
-5
-4
-3
-2
-1
Q [m³/h]
Q [l/s]
P2 [kW]
Eta [%]
Eta
P2
H [m]
NPSH [m]
2900 rpm
NPSH
TM027296

Dimensional sketch

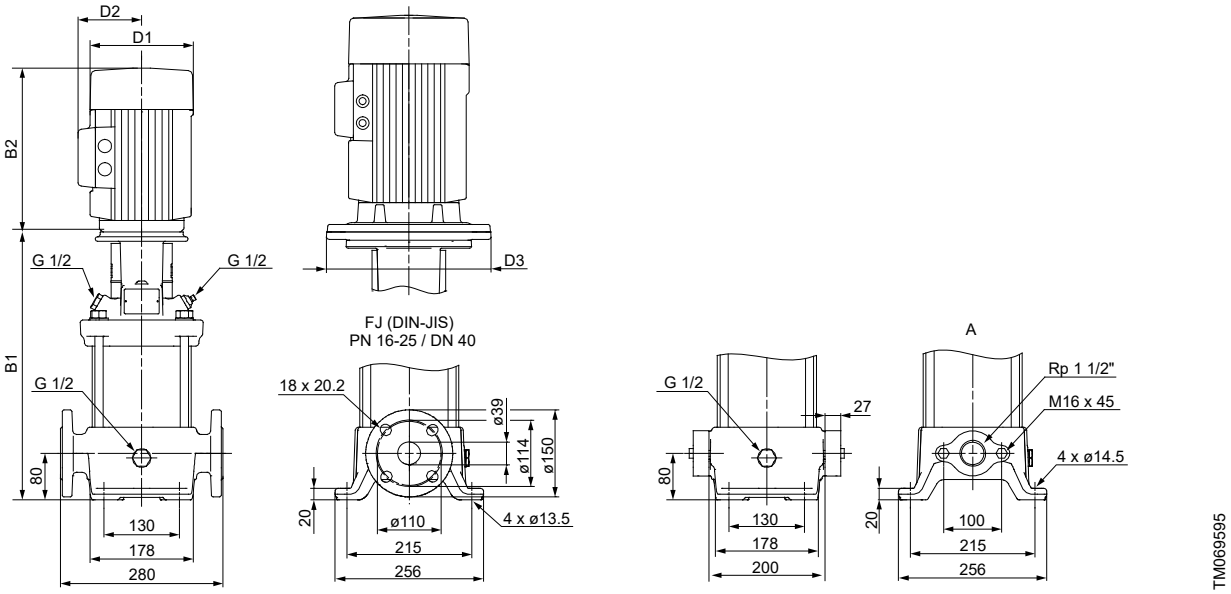

Dimensions and weights

Pump type	Motor P_2 [kW]	Dimension [mm]							Net weight [kg]	
		Oval flange (A)		DIN flange		D1	D2	D3	Oval flange	DIN flange
		B1	B1+B2	B1	B1+B2					
CR 10-1	0.37	343	534	343	534	141	109	-	31	34
CR 10-2	0.75	347	578	347	578	141	109	-	34	36
CR 10-3	1.1	377	628	377	628	141	109	-	37	39
CR 10-4	1.5	423	704	423	704	178	110	-	44	47
CR 10-5	2.2	453	774	453	774	178	110	-	49	52
CR 10-6	2.2	483	804	483	804	178	110	-	50	53
CR 10-7	3	518	853	518	853	198	120	-	56	59
CR 10-8	3	548	883	548	883	198	120	-	57	60
CR 10-9	3	578	913	578	913	198	120	-	58	61
CR 10-10	4	608	980	608	980	220	134	-	71	74
CR 10-12	4	668	1040	668	1040	220	134	-	73	76
CR 10-14	5.5	760	1151	760	1151	220	134	300	92	94
CR 10-16	5.5	820	1211	820	1211	220	134	300	94	97
CR 10-18	7.5	-	-	880	1259	260	159	300	-	109
CR 10-20	7.5	-	-	940	1319	260	159	300	-	112
CR 10-22	7.5	-	-	1000	1379	260	159	300	-	114

CRI, CRN 10

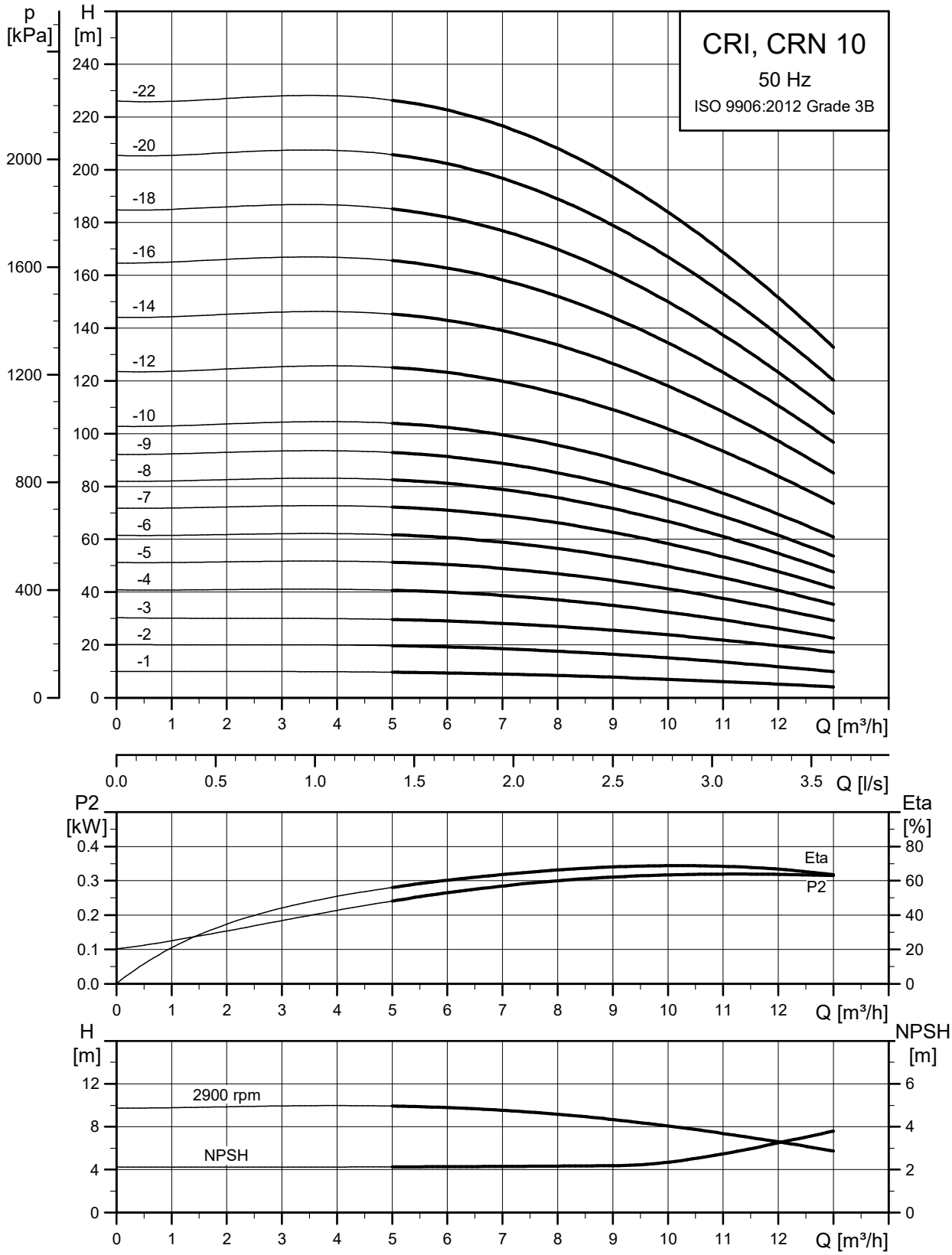
CRI, CRN 10
50 Hz
ISO 9906:2012 Grade 3B
p [kPa]
H [m]
-22
-20
-18
-16
-14
-12
-10
-9
-8
-7
-6
-5
-4
-3
-2
-1
Q [m³/h]
Q [l/s]
P2 [kW]
Eta [%]
Eta
P2
H [m]
NPSH [m]
2900 rpm
NPSH
TM027297

Dimensional sketch

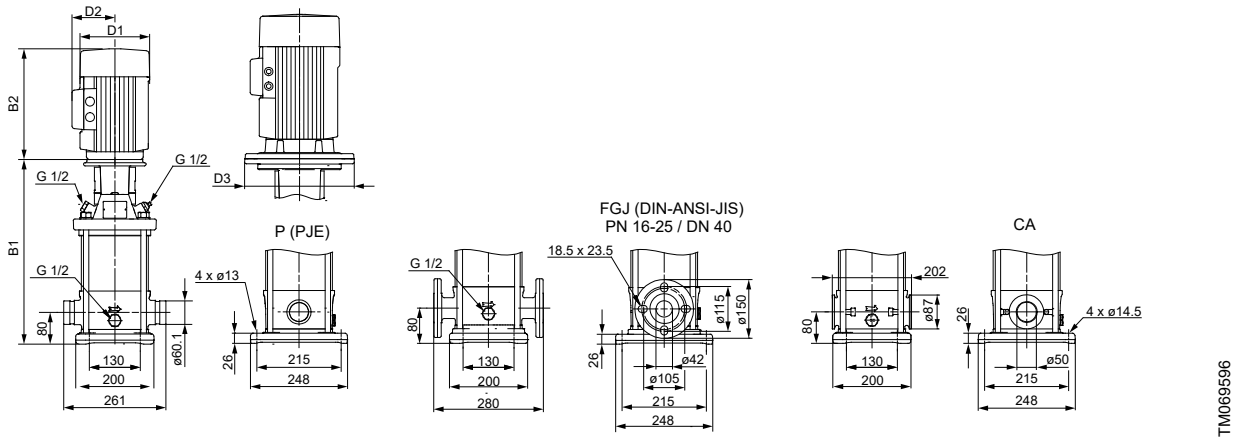

Dimensions and weights

Pump type	Motor P_2 [kW]	Dimension [mm]							Net weight [kg]	
		PJE/CA		DIN flange		D1	D2	D3	PJE/CA	DIN flange
		B1	B1+B2	B1	B1+B2					
CRI/CRN 10-1	0.37	353	544	353	544	141	109	-	29	32
CRI/CRN 10-2	0.75	357	588	357	588	141	109	-	31	35
CRI/CRN 10-3	1.1	387	638	387	638	141	109	-	34	38
CRI/CRN 10-4	1.5	433	714	433	714	178	110	-	42	45
CRI/CRN 10-5	2.2	463	784	463	784	178	110	-	47	50
CRI/CRN 10-6	2.2	493	814	493	814	178	110	-	48	51
CRI/CRN 10-7	3	528	863	528	863	198	120	-	54	58
CRI/CRN 10-8	3	558	893	558	893	198	120	-	55	59
CRI/CRN 10-9	3	588	923	588	923	198	120	-	56	60
CRI/CRN 10-10	4	618	990	618	990	220	134	-	69	73
CRI/CRN 10-12	4	678	1050	678	1050	220	134	-	71	75
CRI/CRN 10-14	5.5	770	1161	770	1161	220	134	300	90	94
CRI/CRN 10-16	5.5	830	1221	830	1221	220	134	300	92	96
CRI/CRN 10-18	7.5	890	1269	890	1269	260	159	300	104	108
CRI/CRN 10-20	7.5	950	1329	950	1329	260	159	300	106	110
CRI/CRN 10-22	7.5	1010	1389	1010	1389	260	159	300	108	112

CR 15

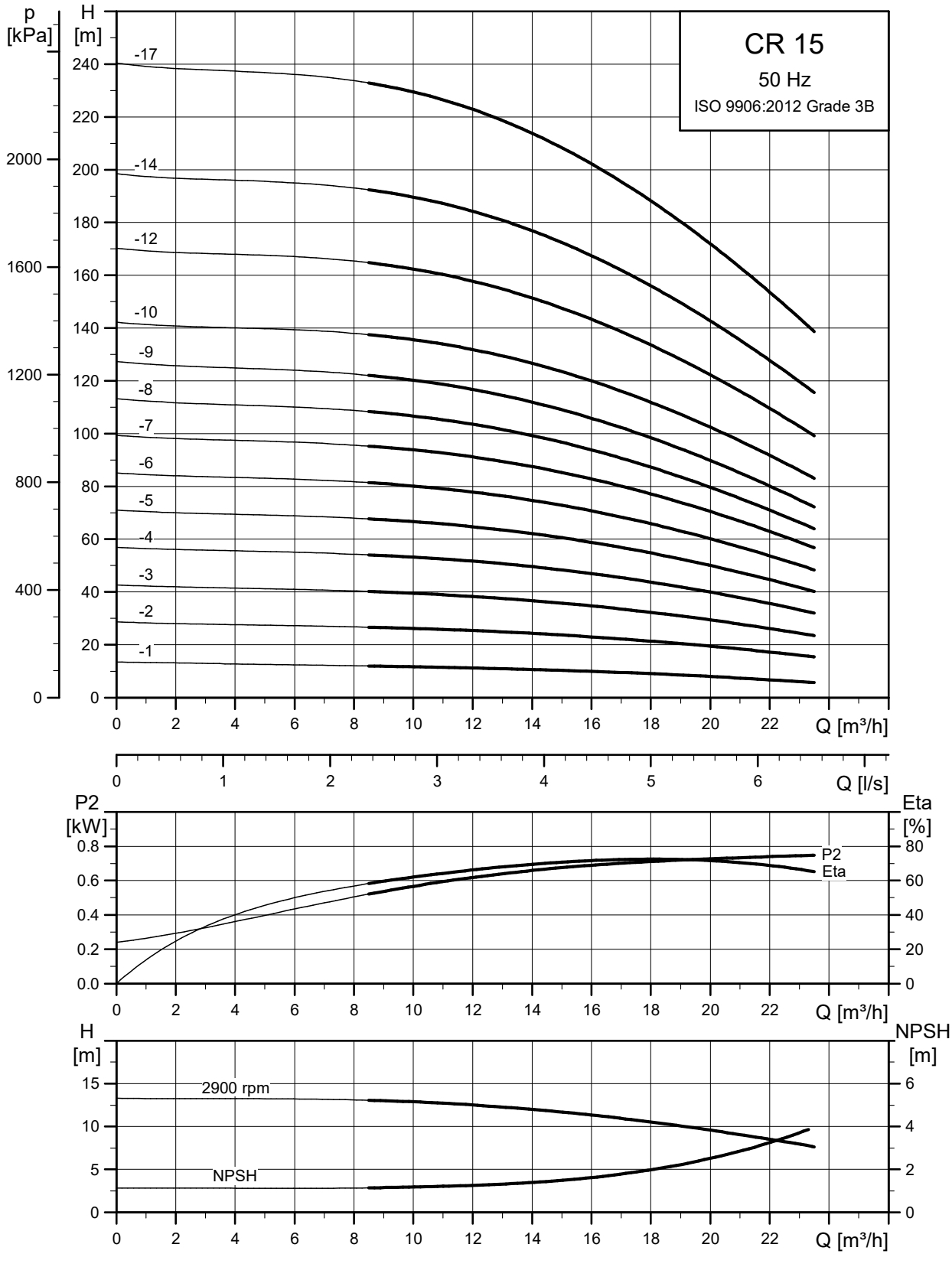
CR 15
50 Hz
ISO 9906:2012 Grade 3B
p [kPa]
H [m]
-17
-14
-12
-10
-9
-8
-7
-6
-5
-4
-3
-2
-1
Q [m³/h]
Q [l/s]
P2 [kW]
Eta [%]
P2
Eta
H [m]
NPSH [m]
2900 rpm
NPSH
TM027298

Dimensional sketch

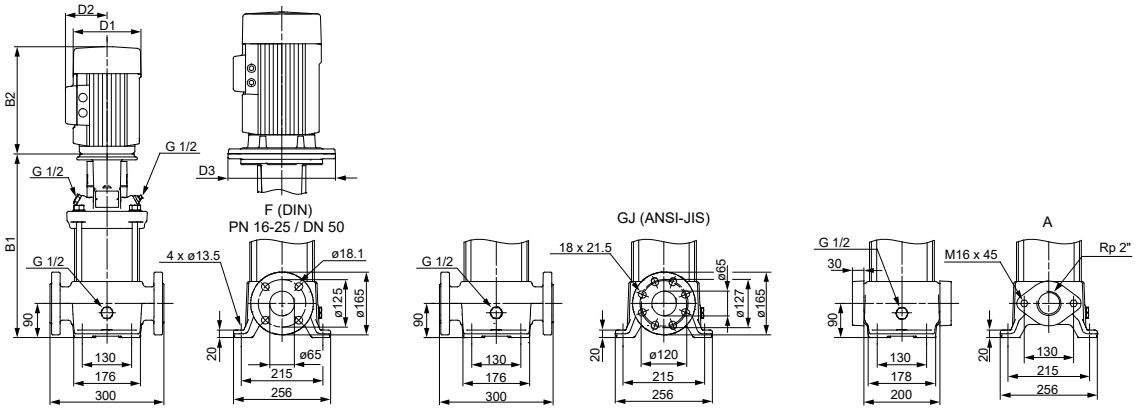

Dimensions and weights

Pump type	Motor P_2 [kW]	Dimension [mm]							Net weight [kg]	
		Oval flange (A)		DIN flange		D1	D2	D3	Oval flange	DIN flange
		B1	B1+B2	B1	B1+B2					
CR 15-1	1.1	400	651	400	651	141	109	-	41	42
CR 15-2	2.2	415	736	415	736	178	110	-	52	53
CR 15-3	3	465	800	465	800	198	120	-	58	59
CR 15-4	4	510	882	510	882	220	134	-	71	72
CR 15-5	4	555	927	555	927	220	134	-	73	74
CR 15-6	5.5	632	1023	632	1023	220	134	300	91	92
CR 15-7	5.5	677	1068	677	1068	220	134	300	93	94
CR 15-8	7.5	-	-	722	1101	260	159	300	-	105
CR 15-9	7.5	-	-	767	1146	260	159	300	-	107
CR 15-10	11	-	-	889	1371	318	204	350	-	149
CR 15-12	11	-	-	979	1461	318	204	350	-	153
CR 15-14	11	-	-	1069	1551	318	204	350	-	157
CR 15-17	15	-	-	1204	1686	318	204	350	-	174

CRI, CRN 15

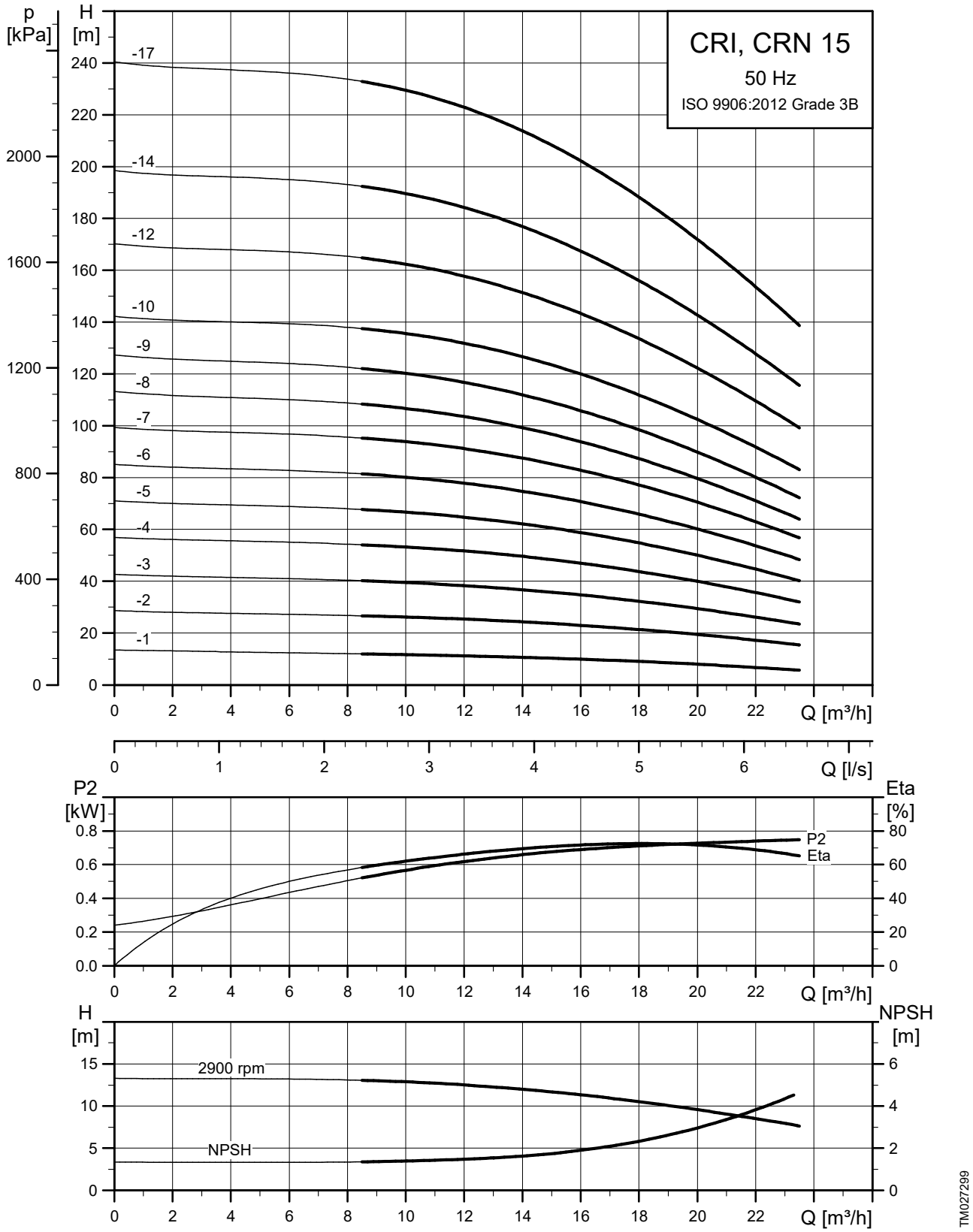
CRI, CRN 15
50 Hz
ISO 9906:2012 Grade 3B
p [kPa]
H [m]
-17
-14
-12
-10
-9
-8
-7
-6
-5
-4
-3
-2
-1
Q [m³/h]
Q [l/s]
P2 [kW]
Eta [%]
P2
Eta
H [m]
NPSH [m]
2900 rpm
NPSH
TM027299

Dimensional sketch

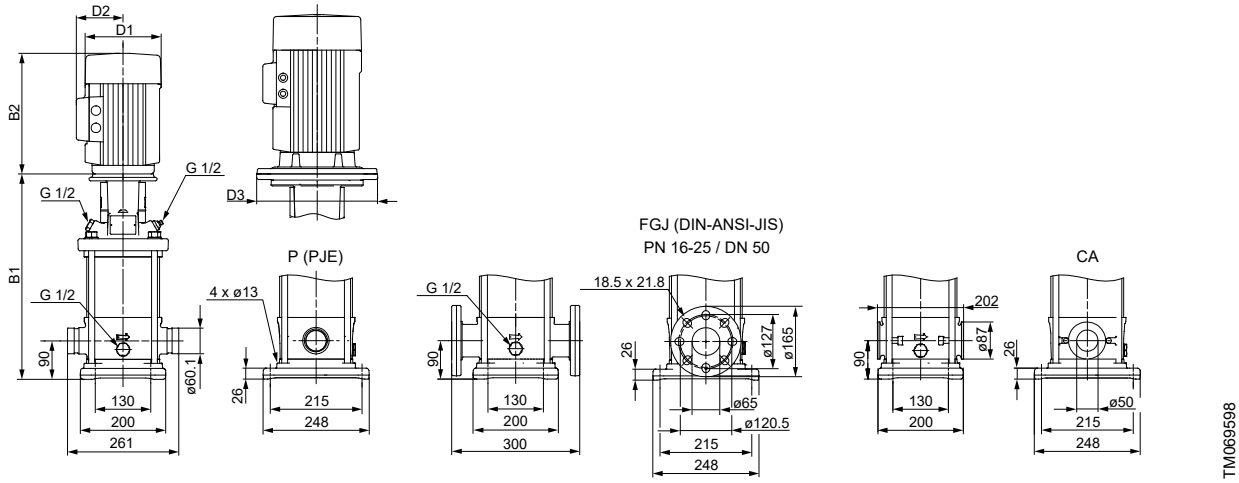

Dimensions and weights

Pump type	Motor P_2 [kW]	Dimension [mm]							Net weight [kg]	
		PJE/CA		DIN flange		D1	D2	D3	PJE/CA	DIN flange
		B1	B1+B2	B1	B1+B2					
CRI/CRN 15-1	1.1	397	648	397	648	141	109	-	34	39
CRI/CRN 15-2	2.2	413	734	413	734	178	110	-	45	50
CRI/CRN 15-3	3	463	798	463	798	198	120	-	52	56
CRI/CRN 15-4	4	508	880	508	880	220	134	-	65	70
CRI/CRN 15-5	4	553	925	553	925	220	134	-	67	71
CRI/CRN 15-6	5.5	630	1021	630	1021	220	134	300	85	89
CRI/CRN 15-7	5.5	675	1066	675	1066	220	134	300	86	91
CRI/CRN 15-8	7.5	720	1099	720	1099	260	159	300	98	103
CRI/CRN 15-9	7.5	765	1144	765	1144	260	159	300	100	104
CRI/CRN 15-10	11	887	1369	887	1369	318	204	350	142	147
CRI/CRN 15-12	11	977	1459	977	1459	318	204	350	145	150
CRI/CRN 15-14	11	1067	1549	1067	1549	318	204	350	149	153
CRI/CRN 15-17	15	1202	1684	1202	1684	318	204	350	165	170

CR 20

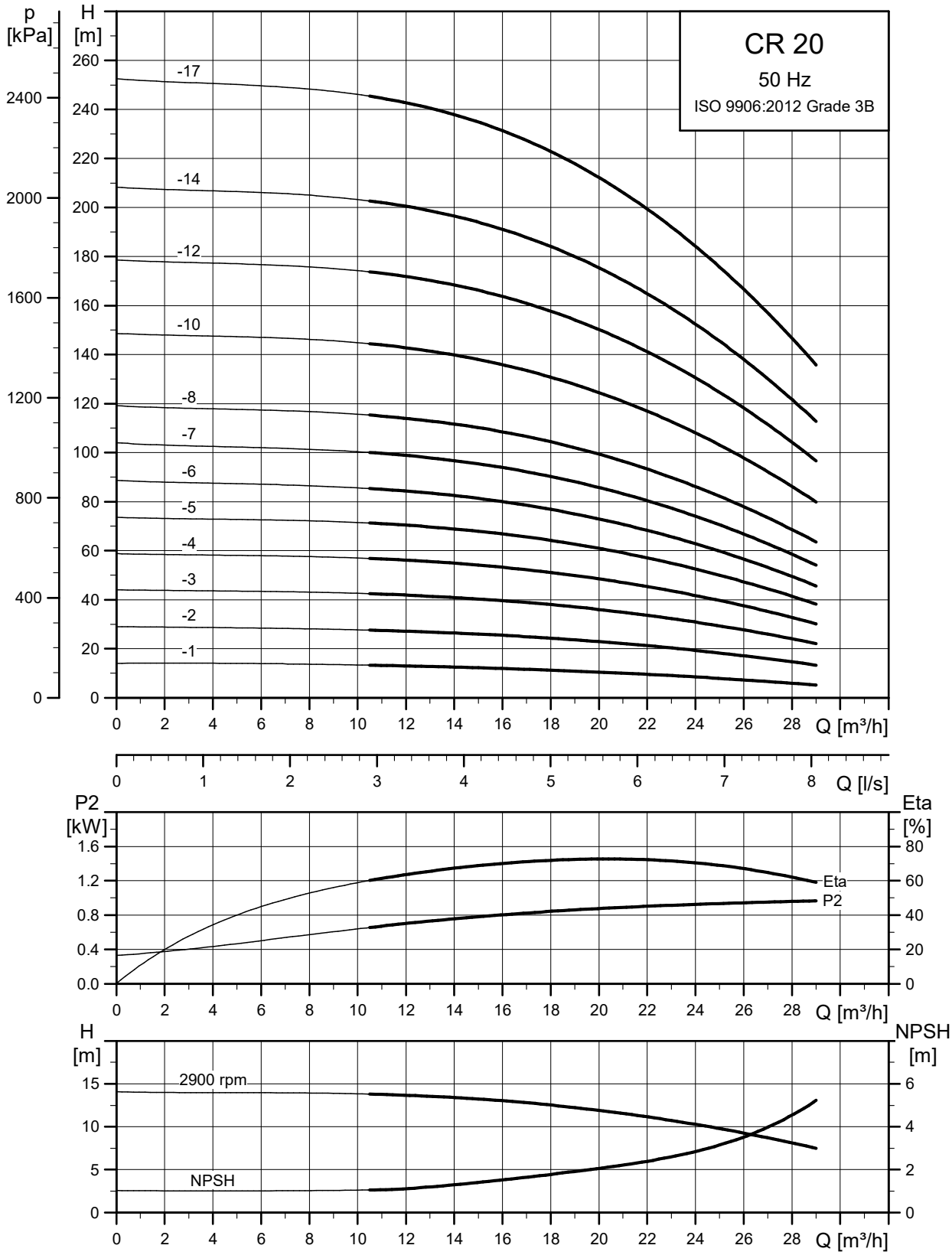
CR 20
50 Hz
ISO 9906:2012 Grade 3B
p [kPa]
H [m]
-17
-14
-12
-10
-8
-7
-6
-5
-4
-3
-2
-1
Q [m³/h]
Q [l/s]
P2 [kW]
Eta [%]
Eta
P2
H [m]
NPSH [m]
2900 rpm
NPSH
TM027300

Dimensional sketch

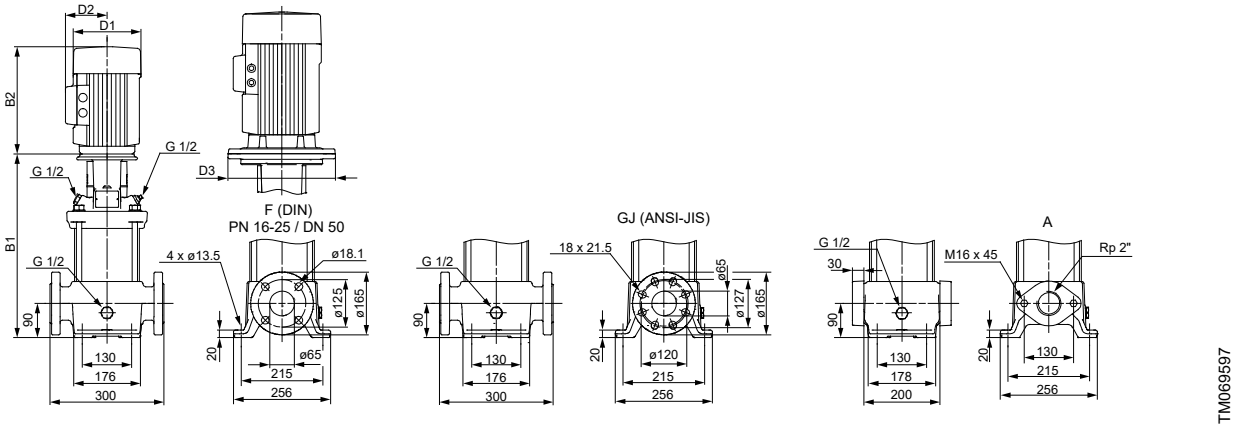

Dimensions and weights

Pump type	Motor P_2 [kW]	Dimension [mm]							Net weight [kg]	
		Oval flange (A)		DIN flange		D1	D2	D3	Oval flange	DIN flange
		B1	B1+B2	B1	B1+B2					
CR 20-1	1.1	400	651	400	651	141	109	-	41	42
CR 20-2	2.2	415	736	415	736	178	110	-	52	53
CR 20-3	4	465	837	465	837	220	134	-	70	71
CR 20-4	5.5	542	933	542	933	220	134	300	88	89
CR 20-5	5.5	587	978	587	978	220	134	300	90	90
CR 20-6	7.5	632	1011	632	1011	260	159	300	101	102
CR 20-7	7.5	677	1056	677	1056	260	159	300	103	103
CR 20-8	11	-	-	799	1281	318	204	350	-	146
CR 20-10	11	-	-	889	1371	318	204	350	-	149
CR 20-12	15	-	-	979	1461	318	204	350	-	165
CR 20-14	15	-	-	1069	1551	318	204	350	-	169
CR 20-17	18.5	-	-	1204	1730	318	204	350	-	186

CRI, CRN 20

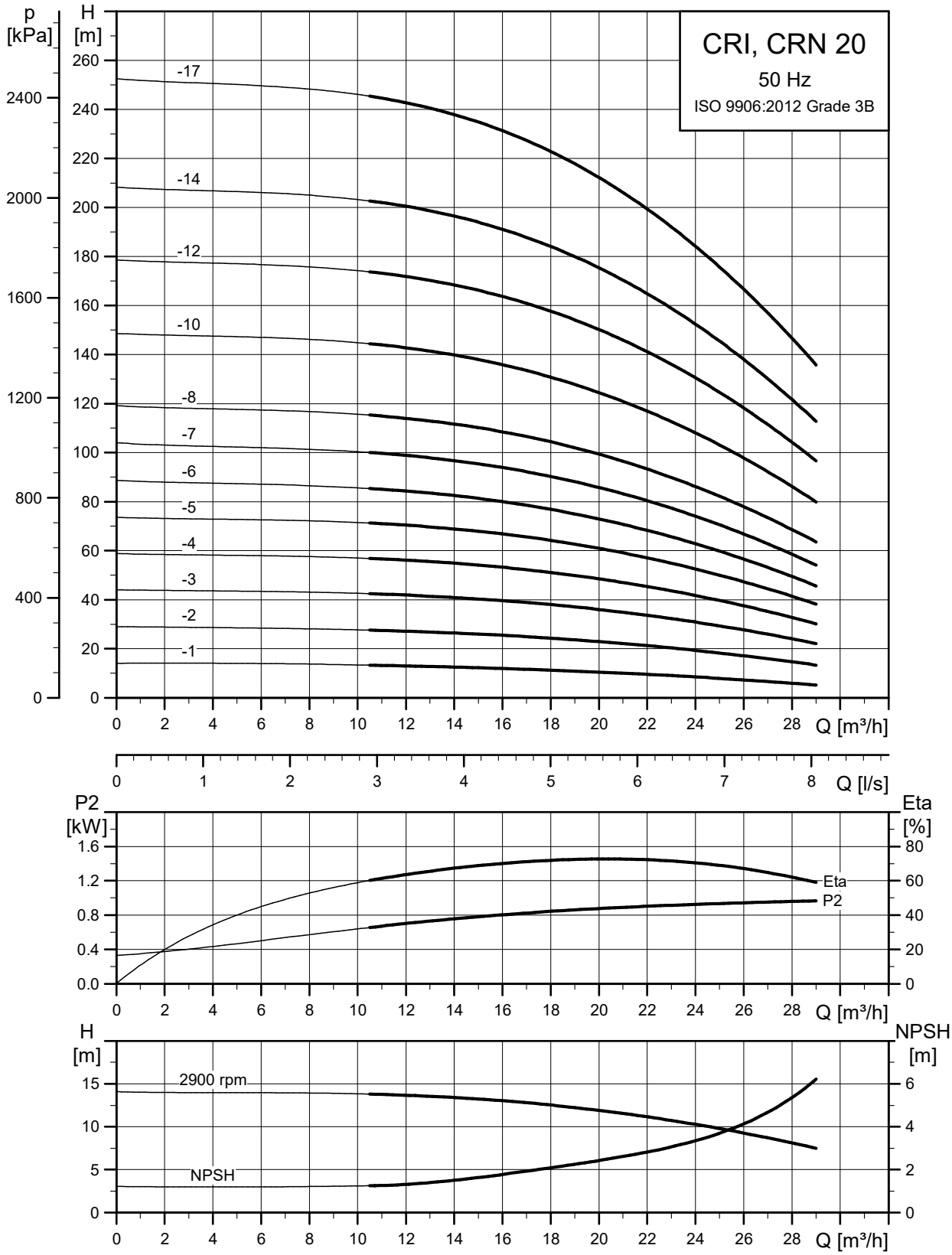
CRI, CRN 20
50 Hz
ISO 9906:2012 Grade 3B
p [kPa]
H [m]
-17
-14
-12
-10
-8
-7
-6
-5
-4
-3
-2
-1
Q [m³/h]
Q [l/s]
P2 [kW]
Eta [%]
Eta
P2
H [m]
NPSH [m]
2900 rpm
NPSH
TM027301

Dimensional sketch

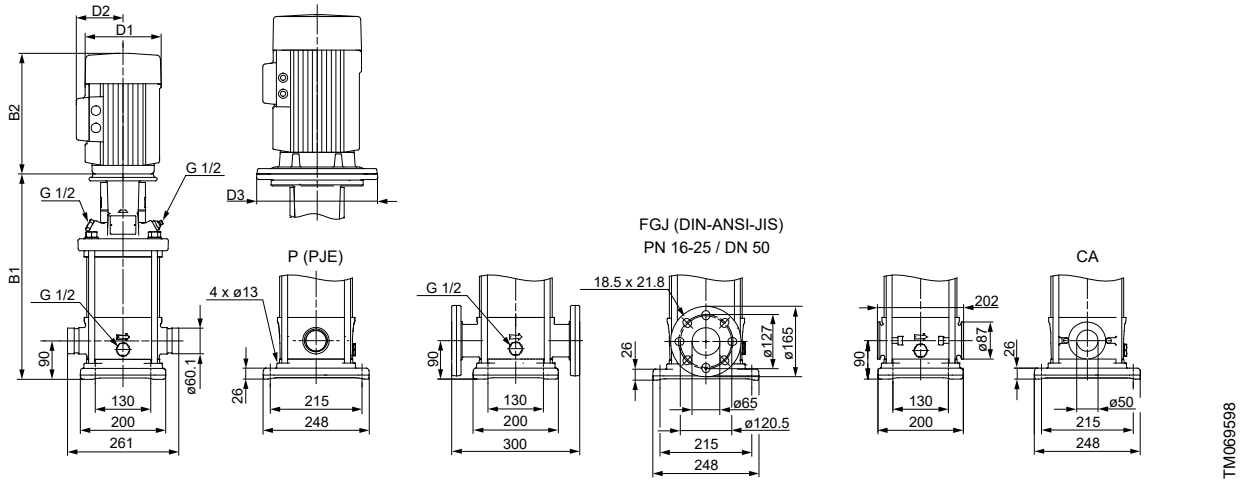

Dimensions and weights

Pump type	Motor P_2 [kW]	Dimension [mm]							Net weight [kg]	
		PJE/CA		DIN flange		D1	D2	D3	PJE/CA	DIN flange
		B1	B1+B2	B1	B1+B2					
CRI/CRN 20-1	1.1	397	648	397	648	141	109	-	34	39
CRI/CRN 20-2	2.2	413	734	413	734	178	110	-	45	50
CRI/CRN 20-3	4	463	835	463	835	220	134	-	63	68
CRI/CRN 20-4	5.5	540	931	540	931	220	134	300	82	86
CRI/CRN 20-5	5.5	585	976	585	976	220	134	300	83	88
CRI/CRN 20-6	7.5	630	1009	630	1009	260	159	300	94	99
CRI/CRN 20-7	7.5	675	1054	675	1054	260	159	300	96	101
CRI/CRN 20-8	11	797	1279	797	1279	318	204	350	138	143
CRI/CRN 20-10	11	887	1369	887	1369	318	204	350	142	147
CRI/CRN 20-12	15	977	1459	977	1459	318	204	350	157	162
CRI/CRN 20-14	15	1067	1549	1067	1549	318	204	350	161	165
CRI/CRN 20-17	18.5	1202	1728	1202	1728	318	204	350	178	183

CR 32

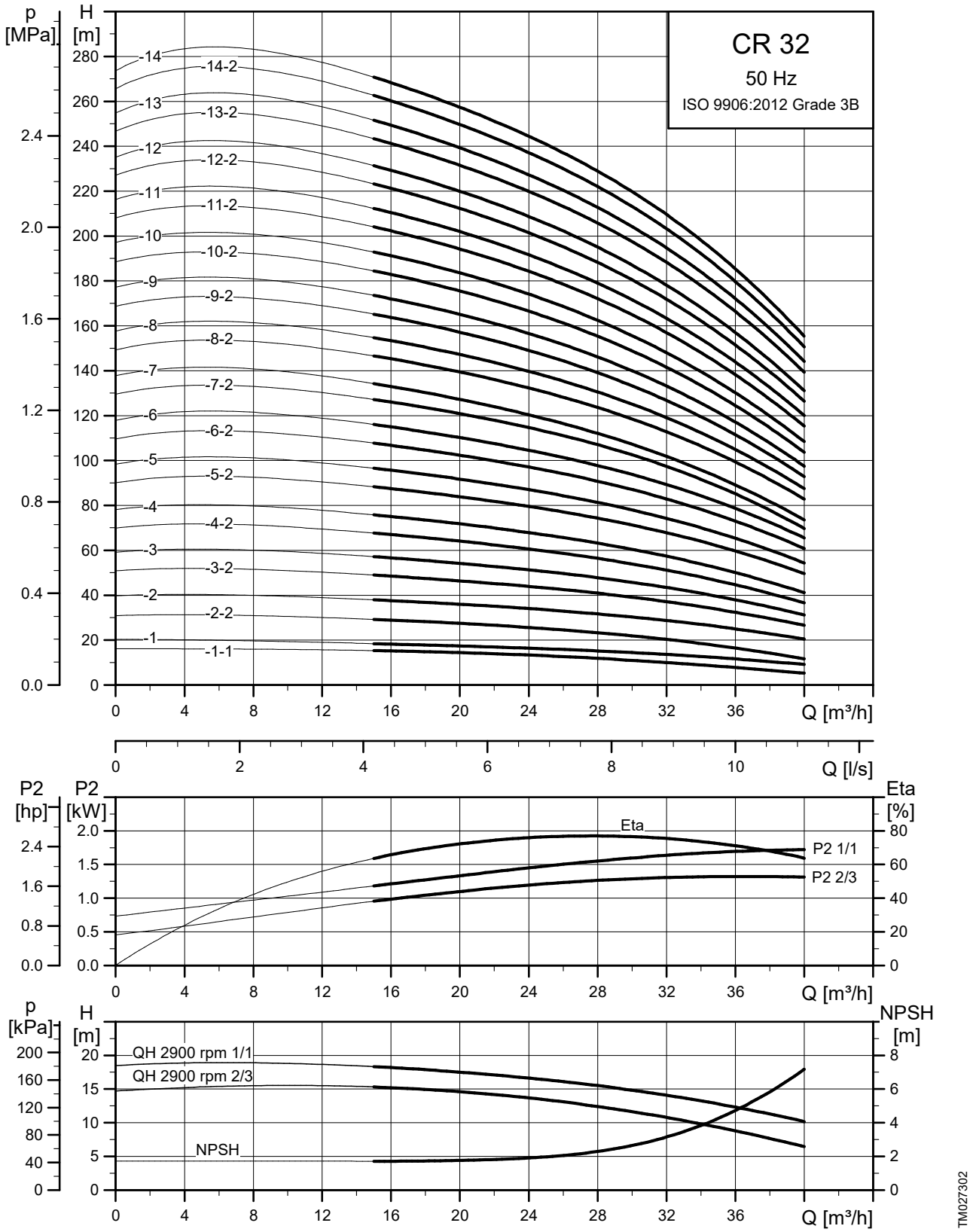
CR 32
50 Hz
ISO 9906:2012 Grade 3B
p [MPa]
H [m]
-14
-14-2
-13
-13-2
-12
-12-2
-11
-11-2
-10
-10-2
-9
-9-2
-8
-8-2
-7
-7-2
-6
-6-2
-5
-5-2
-4
-4-2
-3
-3-2
-2
-2-2
-1
-1-1
Q [m³/h]
Q [l/s]
P2 [hp]
P2 [kW]
Eta [%]
Eta
P2 1/1
P2 2/3
p [kPa]
H [m]
NPSH [m]
QH 2900 rpm 1/1
QH 2900 rpm 2/3
NPSH
TM027302

Dimensional sketch

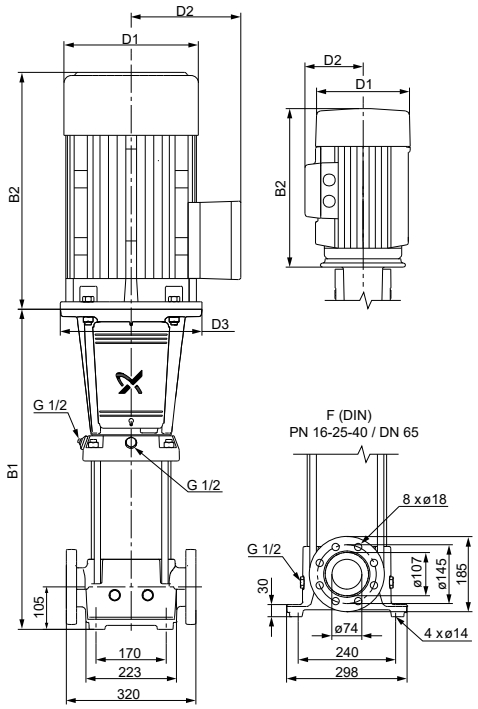

Dimensions and weights

Pump type	Motor P_2 [kW]	Dimension [mm]					Net weight [kg]
		B1	B1+B2	D1	D2	D3	
CR 32-1-1	1.5	505	786	178	110	-	63
CR 32-1	2.2	505	826	178	110	-	67
CR 32-2-2	3	575	910	198	120	-	75
CR 32-2	4	575	947	220	134	-	86
CR 32-3-2	5.5	645	1036	220	134	300	97
CR 32-3	5.5	645	1036	220	134	300	97
CR 32-4-2	7.5	715	1094	260	159	300	110
CR 32-4	7.5	715	1094	260	159	300	110
CR 32-5-2	11	895	1377	318	204	350	158
CR 32-5	11	895	1377	318	204	350	158
CR 32-6-2	11	965	1447	318	204	350	161
CR 32-6	11	965	1447	318	204	350	161
CR 32-7-2	15	1035	1517	318	204	350	176
CR 32-7	15	1035	1517	318	204	350	176
CR 32-8-2	15	1105	1587	318	204	350	182
CR 32-8	15	1105	1587	318	204	350	182
CR 32-9-2	18.5	1175	1701	318	204	350	198
CR 32-9	18.5	1175	1701	318	204	350	198
CR 32-10-2	18.5	1245	1771	318	204	350	201
CR 32-10	18.5	1245	1771	318	204	350	201
CR 32-11-2	22	1315	1867	318	204	350	220
CR 32-11	22	1315	1867	318	204	350	220
CR 32-12-2	22	1385	1937	318	204	350	223
CR 32-12	22	1385	1937	318	204	350	223
CR 32-13-2	30	1455	2066	396	315	400	329
CR 32-13	30	1455	2066	396	315	400	329
CR 32-14-2	30	1525	2136	396	315	400	332
CR 32-14	30	1525	2136	396	315	400	332

CRN 32

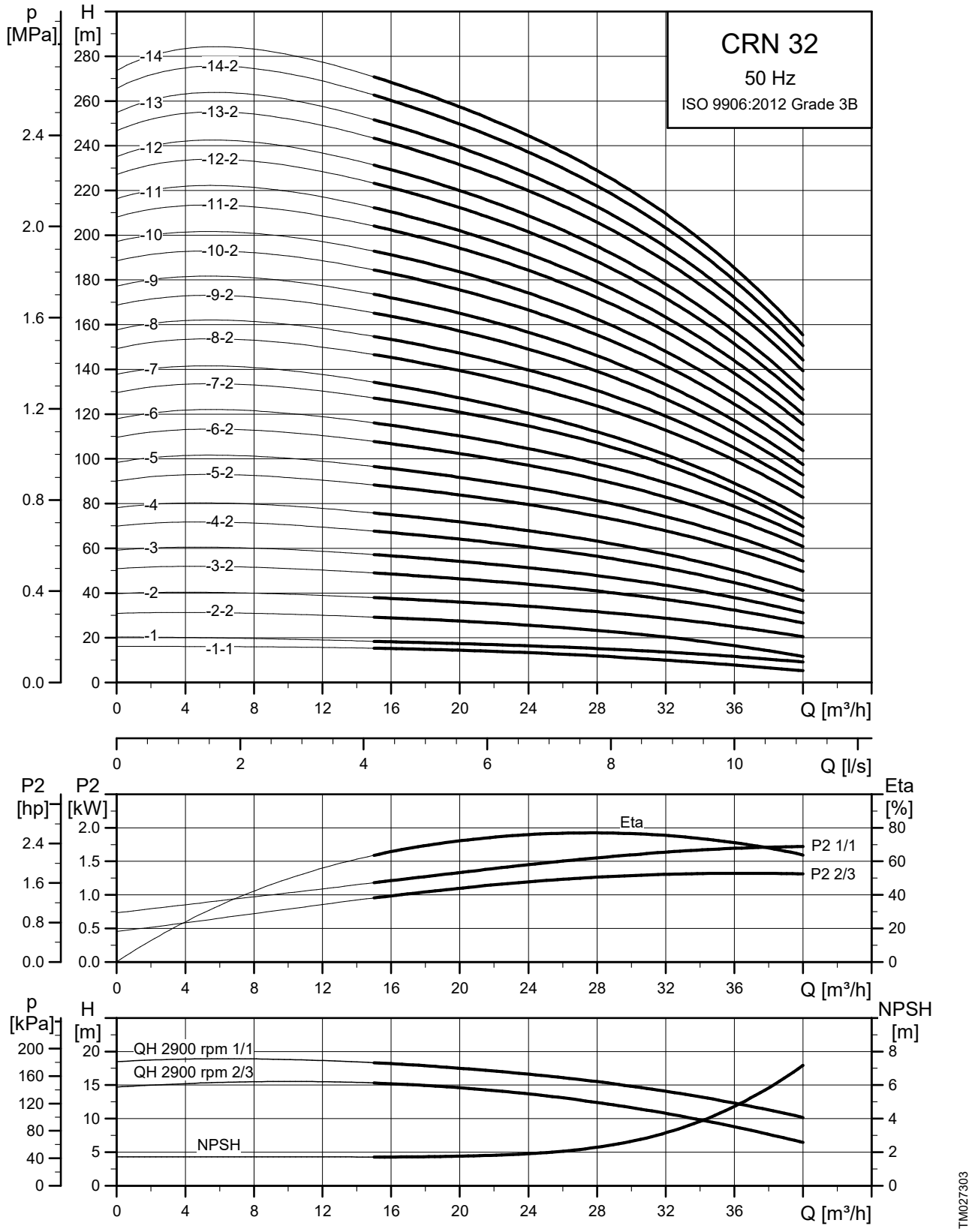
CRN 32
50 Hz
ISO 9906:2012 Grade 3B
p [MPa]
H [m]
-14
-14-2
-13
-13-2
-12
-12-2
-11
-11-2
-10
-10-2
-9
-9-2
-8
-8-2
-7
-7-2
-6
-6-2
-5
-5-2
-4
-4-2
-3
-3-2
-2
-2-2
-1
-1-1
Q [m³/h]
Q [l/s]
P2 [hp]
P2 [kW]
Eta [%]
Eta
P2 1/1
P2 2/3
p [kPa]
H [m]
NPSH [m]
QH 2900 rpm 1/1
QH 2900 rpm 2/3
NPSH
TM027303

Dimensional sketch

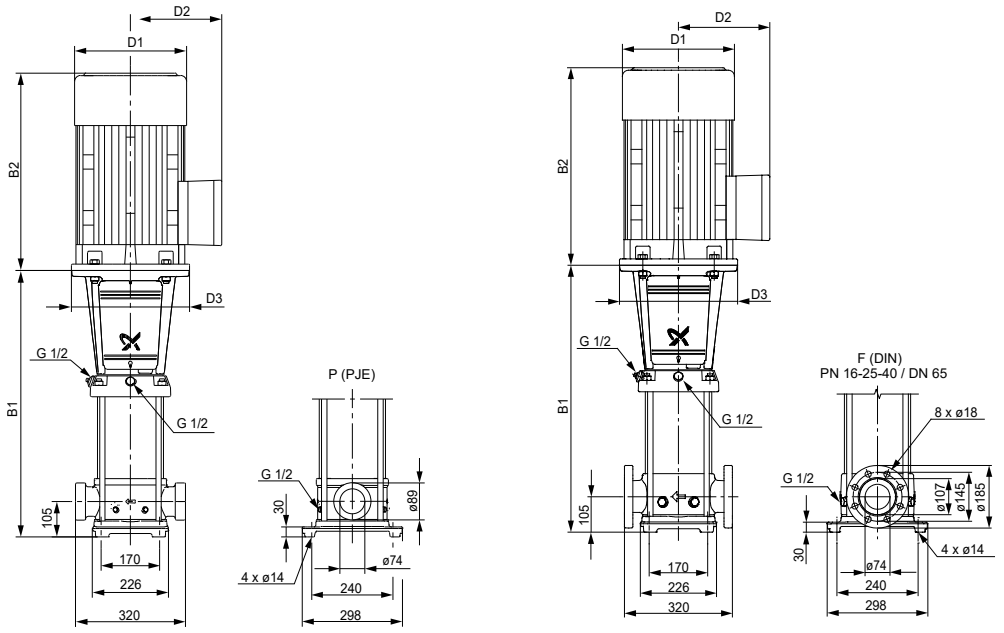

Dimensions and weights

Pump type	Motor P_2 [kW]	Dimension [mm]					Net weight [kg]
		B1	B1+B2	D1	D2	D3	
CRN 32-1-1	1.5	505	786	178	110	-	65
CRN 32-1	2.2	505	826	178	110	-	69
CRN 32-2-2	3	575	910	198	120	-	77
CRN 32-2	4	575	947	220	134	-	89
CRN 32-3-2	5.5	645	1036	220	134	300	99
CRN 32-3	5.5	645	1036	220	134	300	99
CRN 32-4-2	7.5	715	1094	260	159	300	112
CRN 32-4	7.5	715	1094	260	159	300	112
CRN 32-5-2	11	895	1377	318	204	350	160
CRN 32-5	11	895	1377	318	204	350	160
CRN 32-6-2	11	965	1447	318	204	350	163
CRN 32-6	11	965	1447	318	204	350	163
CRN 32-7-2	15	1035	1517	318	204	350	178
CRN 32-7	15	1035	1517	318	204	350	178
CRN 32-8-2	15	1105	1587	318	204	350	184
CRN 32-8	15	1105	1587	318	204	350	184
CRN 32-9-2	18.5	1175	1701	318	204	350	200
CRN 32-9	18.5	1175	1701	318	204	350	200
CRN 32-10-2	18.5	1245	1771	318	204	350	204
CRN 32-10	18.5	1245	1771	318	204	350	204
CRN 32-11-2	22	1315	1867	318	204	350	222
CRN 32-11	22	1315	1867	318	204	350	222
CRN 32-12-2	22	1385	1937	318	204	350	225
CRN 32-12	22	1385	1937	318	204	350	225
CRN 32-13-2	30	1455	2066	396	315	400	331
CRN 32-13	30	1455	2066	396	315	400	331
CRN 32-14-2	30	1525	2136	396	315	400	335
CRN 32-14	30	1525	2136	396	315	400	335

CR 45

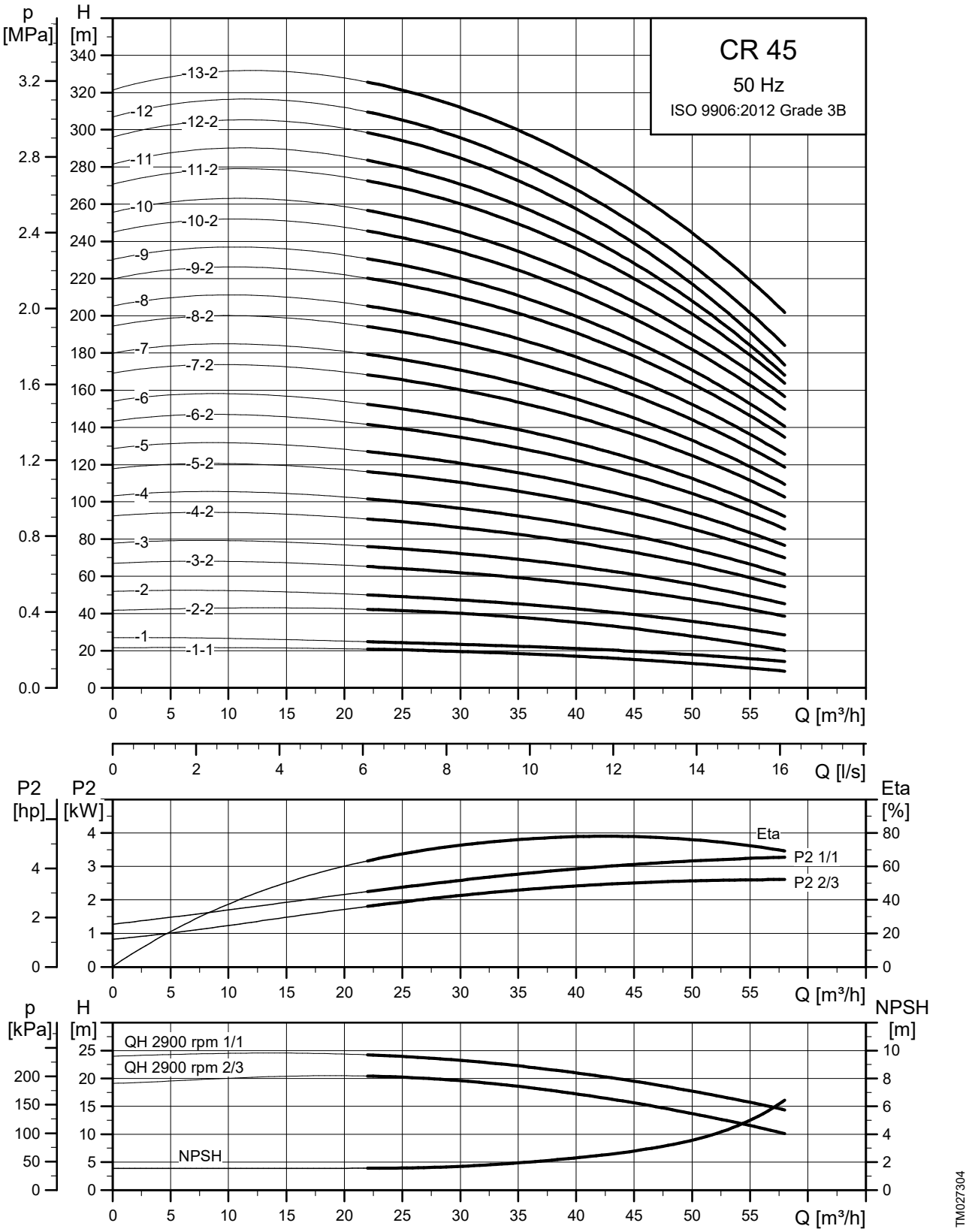
CR 45
50 Hz
ISO 9906:2012 Grade 3B
p [MPa]
H [m]
-13-2
-12
-12-2
-11
-11-2
-10
-10-2
-9
-9-2
-8
-8-2
-7
-7-2
-6
-6-2
-5
-5-2
-4
-4-2
-3
-3-2
-2
-2-2
-1
-1-1
Q [m³/h]
Q [l/s]
P2 [hp]
P2 [kW]
Eta [%]
Eta
P2 1/1
P2 2/3
p [kPa]
H [m]
NPSH [m]
QH 2900 rpm 1/1
QH 2900 rpm 2/3
NPSH
TM027304

Dimensional sketch

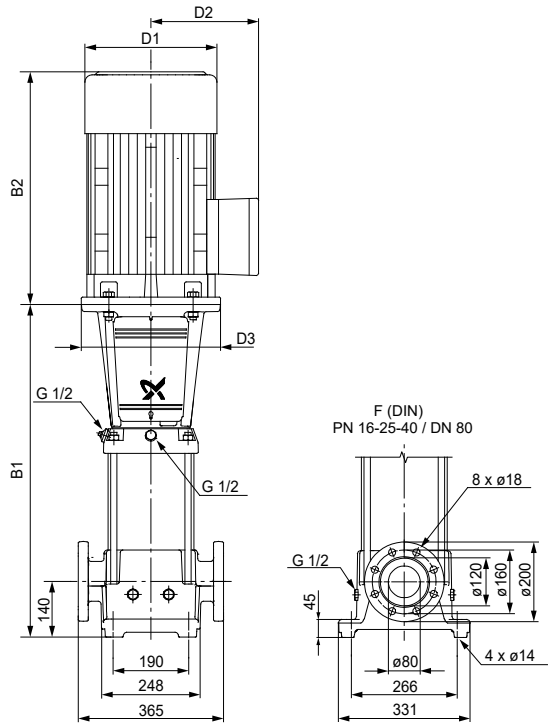

Dimensions and weights

Pump type	Motor P_2 [kW]	Dimension [mm]					Net weight [kg]
		B1	B1+B2	D1	D2	D3	
CR 45-1-1	3	559	894	198	120	-	82
CR 45-1	4	559	931	220	134	-	93
CR 45-2-2	5.5	639	1030	220	134	300	104
CR 45-2	7.5	639	1018	260	159	300	114
CR 45-3-2	11	829	1311	318	204	350	163
CR 45-3	11	829	1311	318	204	350	163
CR 45-4-2	15	909	1391	318	204	350	179
CR 45-4	15	909	1391	318	204	350	179
CR 45-5-2	18.5	989	1515	318	204	350	195
CR 45-5	18.5	989	1515	318	204	350	195
CR 45-6-2	22	1069	1621	318	204	350	217
CR 45-6	22	1069	1621	318	204	350	217
CR 45-7-2	30	1149	1760	396	315	400	324
CR 45-7	30	1149	1760	396	315	400	324
CR 45-8-2	30	1229	1840	396	315	400	328
CR 45-8	30	1229	1840	396	315	400	328
CR 45-9-2	30	1309	1920	396	315	400	332
CR 45-9	37	1309	1945	396	315	400	357
CR 45-10-2	37	1389	2025	396	315	400	362
CR 45-10	37	1389	2025	396	315	400	362
CR 45-11-2	45	1469	2177	449	338	450	455
CR 45-11	45	1469	2177	449	338	450	455
CR 45-12-2	45	1549	2257	449	338	450	460
CR 45-12	45	1549	2257	449	338	450	460
CR 45-13-2	45	1629	2337	449	338	450	464

CRN 45

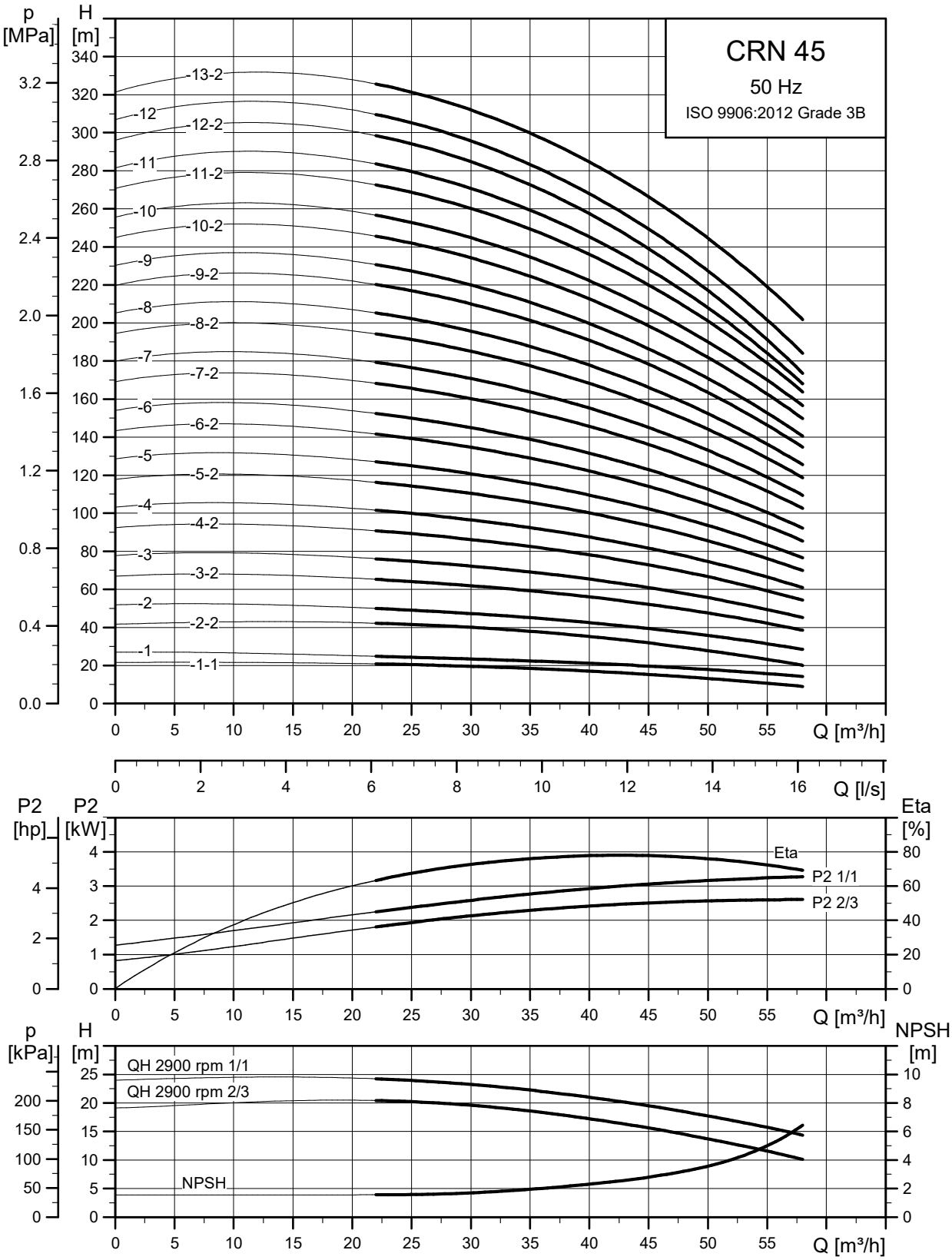
CRN 45
50 Hz
ISO 9906:2012 Grade 3B
p [MPa]
H [m]
-13-2
-12
-12-2
-11
-11-2
-10
-10-2
-9
-9-2
-8
-8-2
-7
-7-2
-6
-6-2
-5
-5-2
-4
-4-2
-3
-3-2
-2
-2-2
-1
-1-1
Q [m³/h]
Q [l/s]
P2 [hp]
P2 [kW]
Eta [%]
Eta
P2 1/1
P2 2/3
p [kPa]
H [m]
NPSH [m]
QH 2900 rpm 1/1
QH 2900 rpm 2/3
NPSH
TM027305

Dimensional sketch

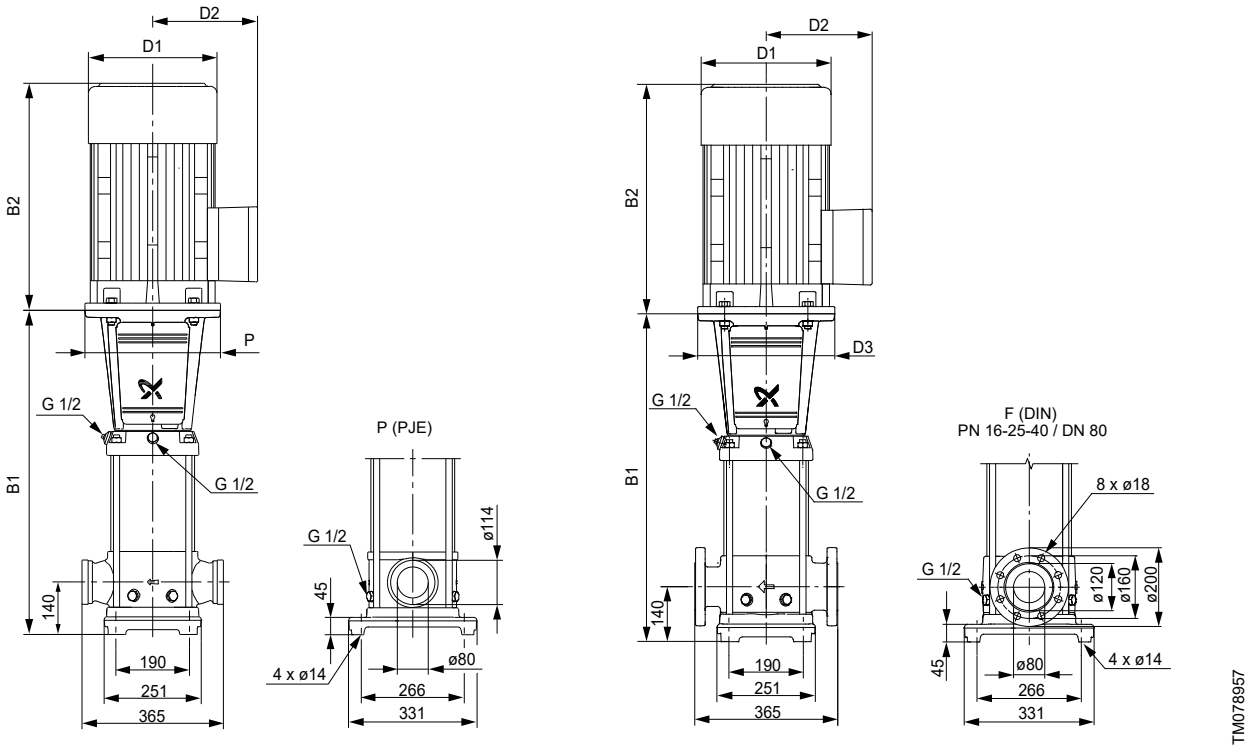

Dimensions and weights

Pump type	Motor P_2 [kW]	Dimension [mm]					Net weight [kg]
		B1	B1+B2	D1	D2	D3	
CRN 45-1-1	3	559	894	198	120	-	82
CRN 45-1	4	559	931	220	134	-	94
CRN 45-2-2	5.5	639	1030	220	134	300	105
CRN 45-2	7.5	639	1018	260	159	300	114
CRN 45-3-2	11	829	1311	318	204	350	164
CRN 45-3	11	829	1311	318	204	350	164
CRN 45-4-2	15	909	1391	318	204	350	179
CRN 45-4	15	909	1391	318	204	350	179
CRN 45-5-2	18.5	989	1515	318	204	350	195
CRN 45-5	18.5	989	1515	318	204	350	195
CRN 45-6-2	22	1069	1621	318	204	350	217
CRN 45-6	22	1069	1621	318	204	350	217
CRN 45-7-2	30	1149	1760	396	315	400	324
CRN 45-7	30	1149	1760	396	315	400	324
CRN 45-8-2	30	1229	1840	396	315	400	328
CRN 45-8	30	1229	1840	396	315	400	328
CRN 45-9-2	30	1309	1920	396	315	400	333
CRN 45-9	37	1309	1945	396	315	400	358
CRN 45-10-2	37	1389	2025	396	315	400	362
CRN 45-10	37	1389	2025	396	315	400	362
CRN 45-11-2	45	1469	2177	449	338	450	455
CRN 45-11	45	1469	2177	449	338	450	455
CRN 45-12-2	45	1549	2257	449	338	450	460
CRN 45-12	45	1549	2257	449	338	450	460
CRN 45-13-2	45	1629	2337	449	338	450	464

CR 64

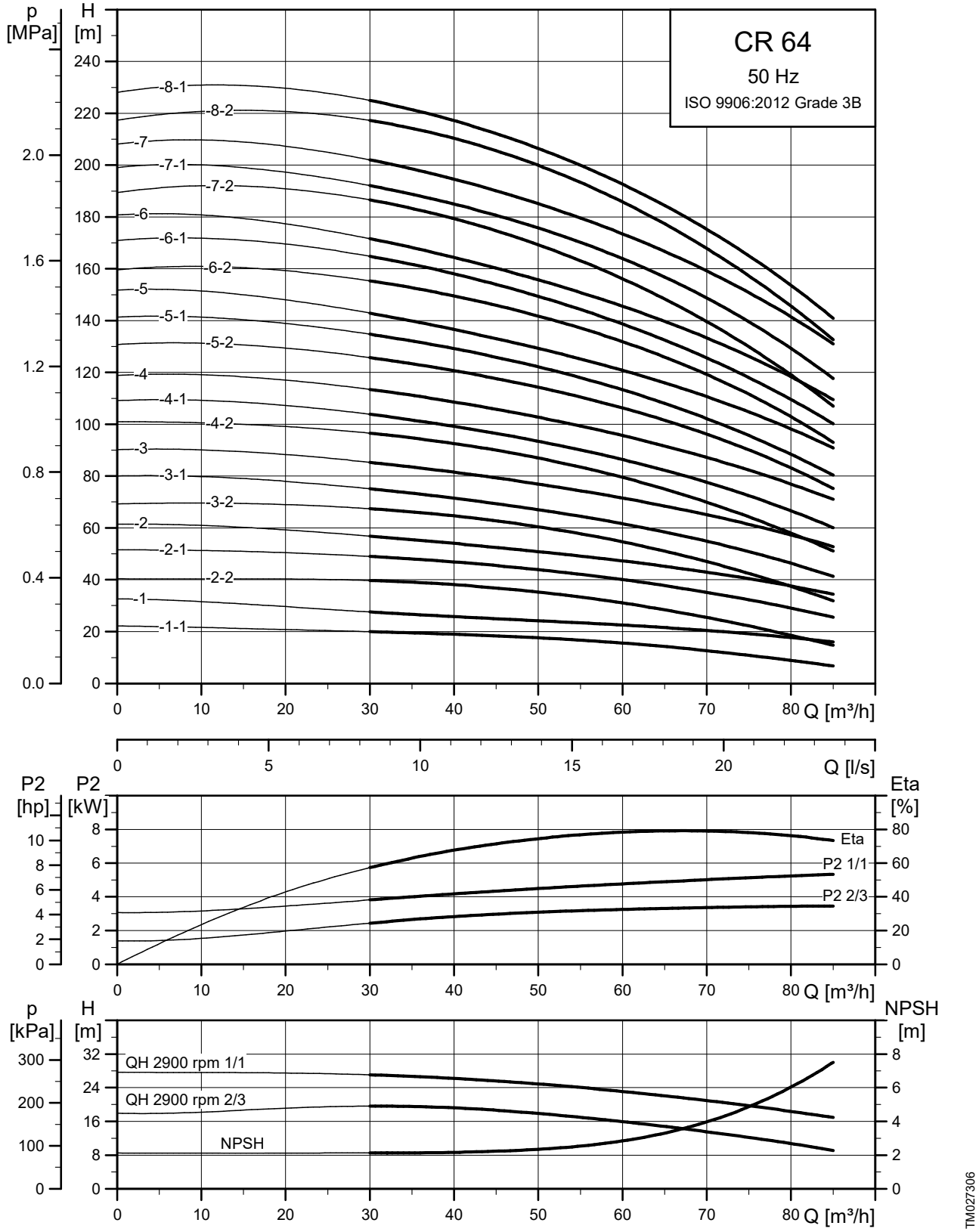
CR 64
50 Hz
ISO 9906:2012 Grade 3B
p [MPa]
H [m]
-8-1
-8-2
-7
-7-1
-7-2
-6
-6-1
-6-2
-5
-5-1
-5-2
-4
-4-1
-4-2
-3
-3-1
-3-2
-2
-2-1
-2-2
-1
-1-1
Q [m³/h]
Q [l/s]
P2 [hp]
P2 [kW]
Eta [%]
Eta
P2 1/1
P2 2/3
p [kPa]
H [m]
NPSH [m]
QH 2900 rpm 1/1
QH 2900 rpm 2/3
NPSH
TM027306

Dimensional sketch

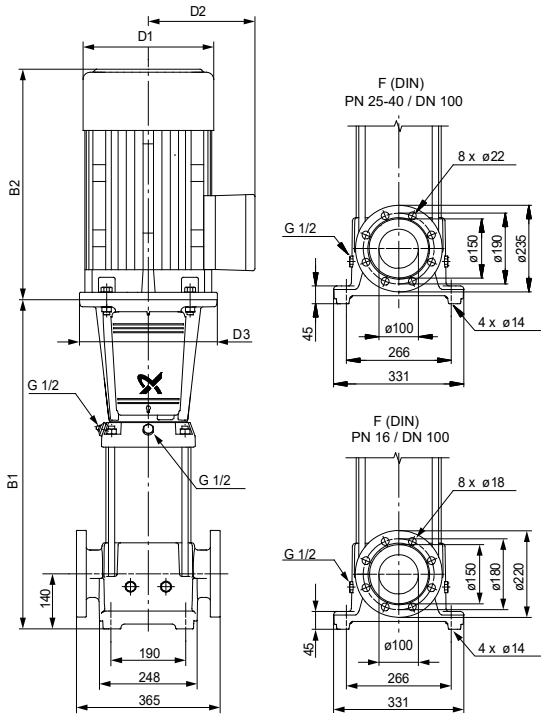

Dimensions and weights

Pump type	Motor P_2 [kW]	Dimension [mm]					Net weight [kg]
		B1	B1+B2	D1	D2	D3	
CR 64-1-1	4	561	933	220	134	-	96
CR 64-1	5.5	561	952	220	134	300	103
CR 64-2-2	7.5	644	1023	260	159	300	117
CR 64-2-1	11	754	1236	318	204	350	162
CR 64-2	11	754	1236	318	204	350	162
CR 64-3-2	15	836	1318	318	204	350	179
CR 64-3-1	15	836	1318	318	204	350	179
CR 64-3	18.5	836	1362	318	204	350	191
CR 64-4-2	18.5	919	1445	318	204	350	196
CR 64-4-1	22	919	1471	318	204	350	211
CR 64-4	22	919	1471	318	204	350	211
CR 64-5-2	30	1001	1612	396	315	400	318
CR 64-5-1	30	1001	1612	396	315	400	318
CR 64-5	30	1001	1612	396	315	400	318
CR 64-6-2	30	1084	1695	396	315	400	324
CR 64-6-1	37	1084	1720	396	315	400	349
CR 64-6	37	1084	1720	396	315	400	349
CR 64-7-2	37	1166	1802	396	315	400	354
CR 64-7-1	37	1166	1802	396	315	400	354
CR 64-7	45	1166	1874	449	338	450	443
CR 64-8-2	45	1249	1957	449	338	450	448
CR 64-8-1	45	1249	1957	449	338	450	448

CRN 64

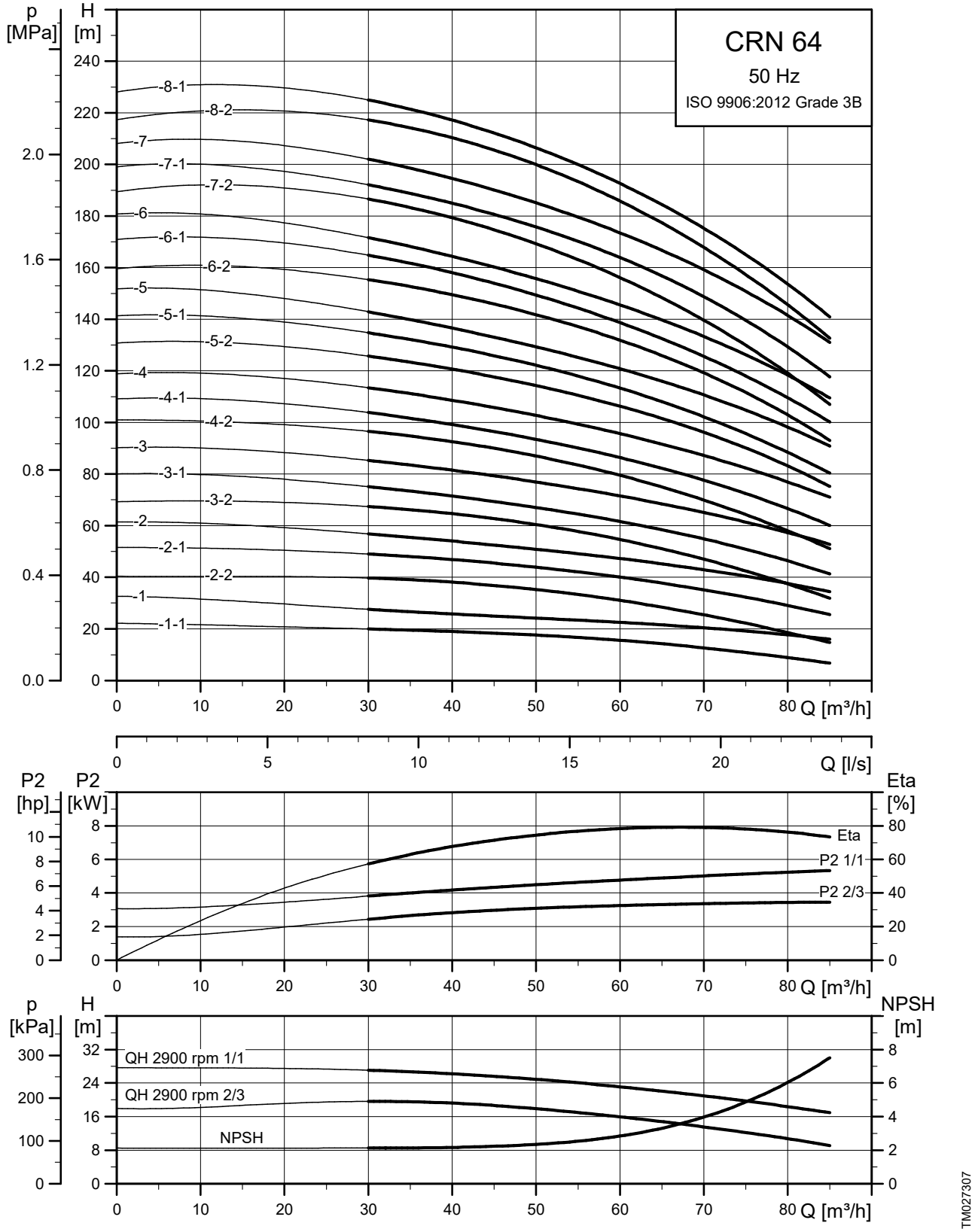
CRN 64
50 Hz
ISO 9906:2012 Grade 3B
p [MPa]
H [m]
-8-1
-8-2
-7
-7-1
-7-2
-6
-6-1
-6-2
-5
-5-1
-5-2
-4
-4-1
-4-2
-3
-3-1
-3-2
-2
-2-1
-2-2
-1
-1-1
Q [m³/h]
Q [l/s]
P2 [hp]
P2 [kW]
Eta [%]
Eta
P2 1/1
P2 2/3
p [kPa]
H [m]
NPSH [m]
QH 2900 rpm 1/1
QH 2900 rpm 2/3
NPSH
TM027307

Dimensional sketch

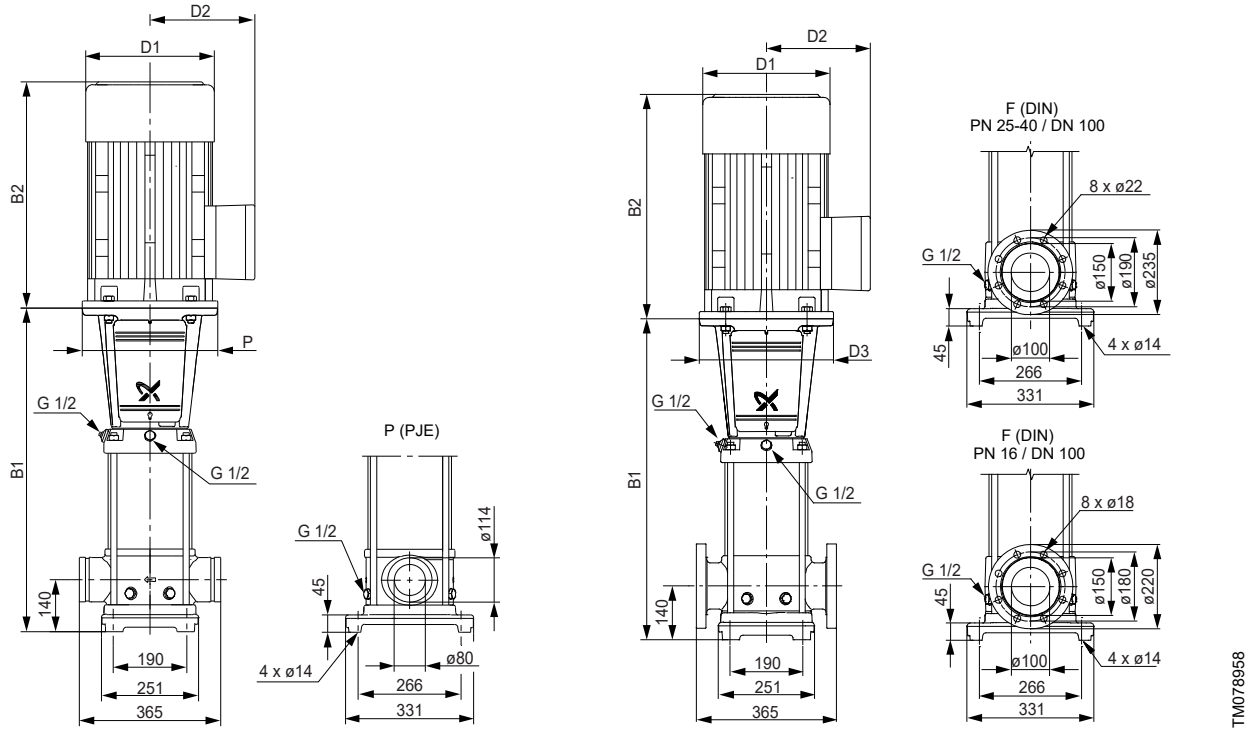

Dimensions and weights

Pump type	Motor P_2 [kW]	Dimension [mm]					Net weight [kg]
		B1	B1+B2	D1	D2	D3	
CRN 64-1-1	4	561	933	220	134	-	95
CRN 64-1	5.5	561	952	220	134	300	103
CRN 64-2-2	7.5	644	1023	260	159	300	117
CRN 64-2-1	11	754	1236	318	204	350	162
CRN 64-2	11	754	1236	318	204	350	162
CRN 64-3-2	15	836	1318	318	204	350	178
CRN 64-3-1	15	836	1318	318	204	350	178
CRN 64-3	18.5	836	1362	318	204	350	191
CRN 64-4-2	18.5	919	1445	318	204	350	196
CRN 64-4-1	22	919	1471	318	204	350	211
CRN 64-4	22	919	1471	318	204	350	211
CRN 64-5-2	30	1001	1612	396	315	400	318
CRN 64-5-1	30	1001	1612	396	315	400	318
CRN 64-5	30	1001	1612	396	315	400	318
CRN 64-6-2	30	1084	1695	396	315	400	325
CRN 64-6-1	37	1084	1720	396	315	400	350
CRN 64-6	37	1084	1720	396	315	400	350
CRN 64-7-2	37	1166	1802	396	315	400	354
CRN 64-7-1	37	1166	1802	396	315	400	354
CRN 64-7	45	1166	1874	449	338	450	444
CRN 64-8-2	45	1249	1957	449	338	450	448
CRN 64-8-1	45	1249	1957	449	338	450	448

CR 95

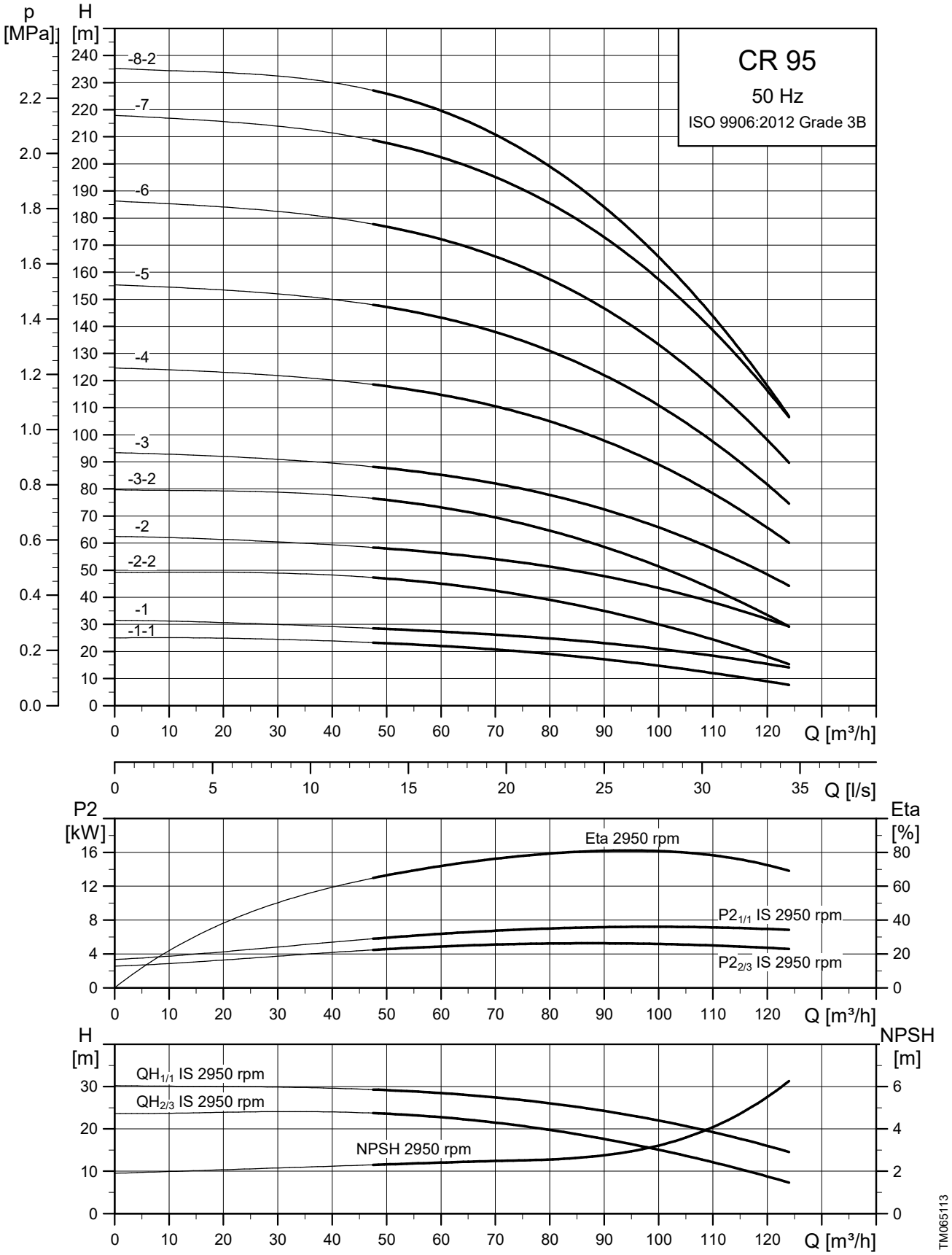

The pump efficiency (ETA) is based on a three-stage pump.

Dimensional sketch

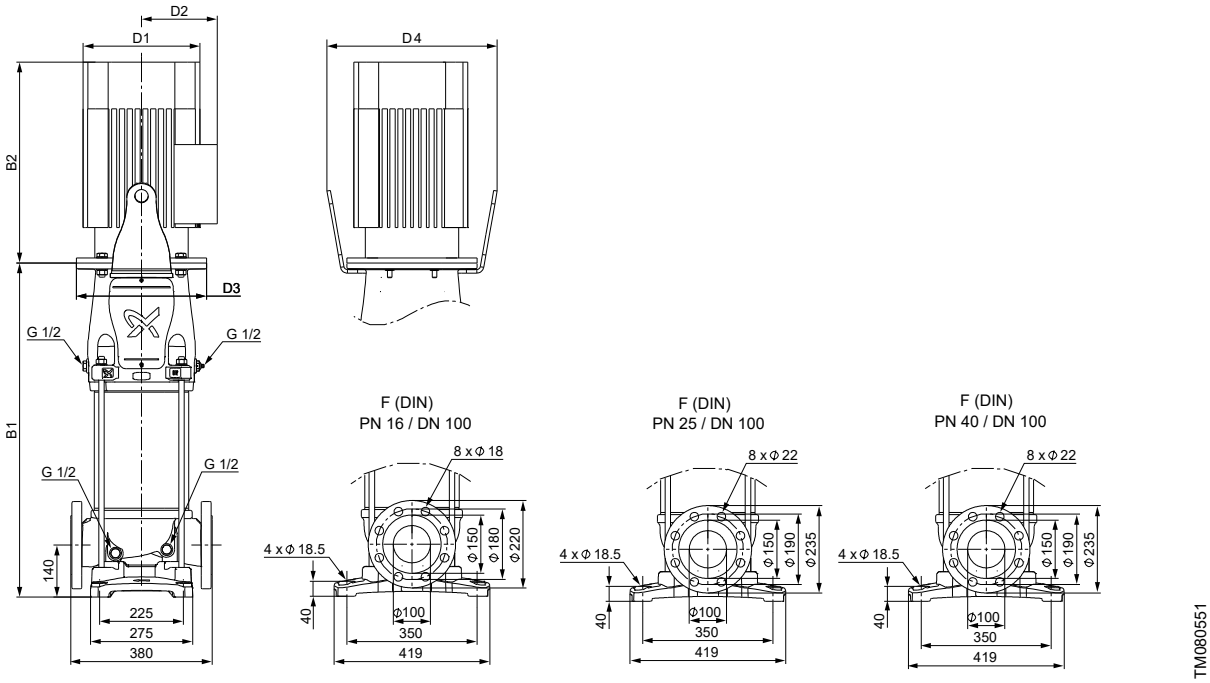

Dimensions and weights

Pump type	Motor P_2 [kW]	Dimension [mm]						Net weight [kg]
		B1	B1+B2	D1	D2	D3	D4	
CR 95-1-1	5.5	689	1080	220	134	300	-	137
CR 95-1	7.5	689	1068	260	159	300	-	147
CR 95-2-2	11	795	1277	318	204	350	-	194
CR 95-2	15	795	1277	318	204	350	-	206
CR 95-3-2	18.5	900	1426	318	204	350	-	224
CR 95-3	22	900	1452	318	204	350	-	239
CR 95-4	30	1009	1620	396	315	400	492	348
CR 95-5	37	1114	1750	396	315	400	492	379
CR 95-6	45	1238	1946	449	338	450	573	480
CR 95-7	55	1342	2089	497	410	550	732	598
CR 95-8-2	55	1446	2193	497	410	550	732	604

CRN 95

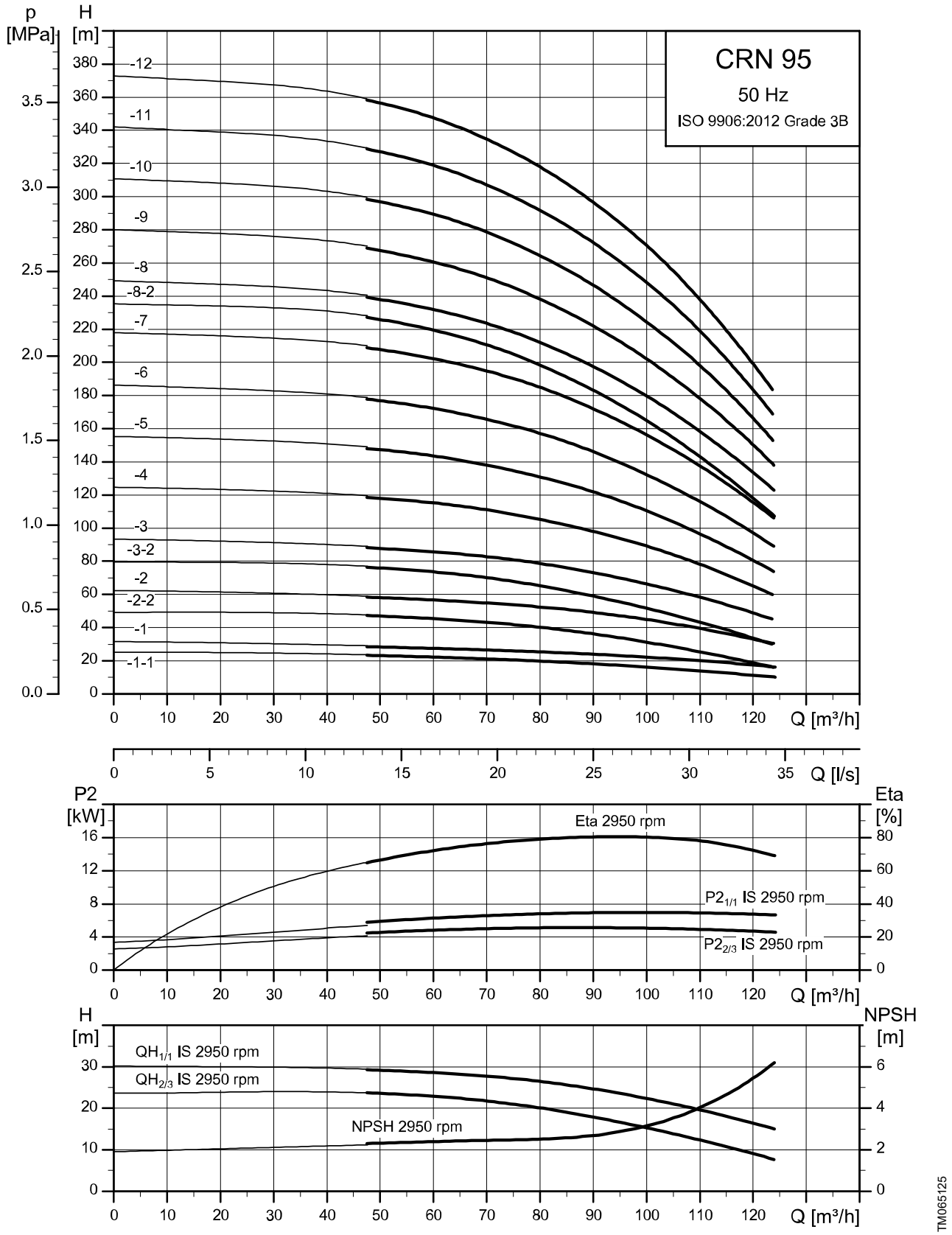

The pump efficiency (ETA) is based on a three-stage pump.

Dimensional sketch

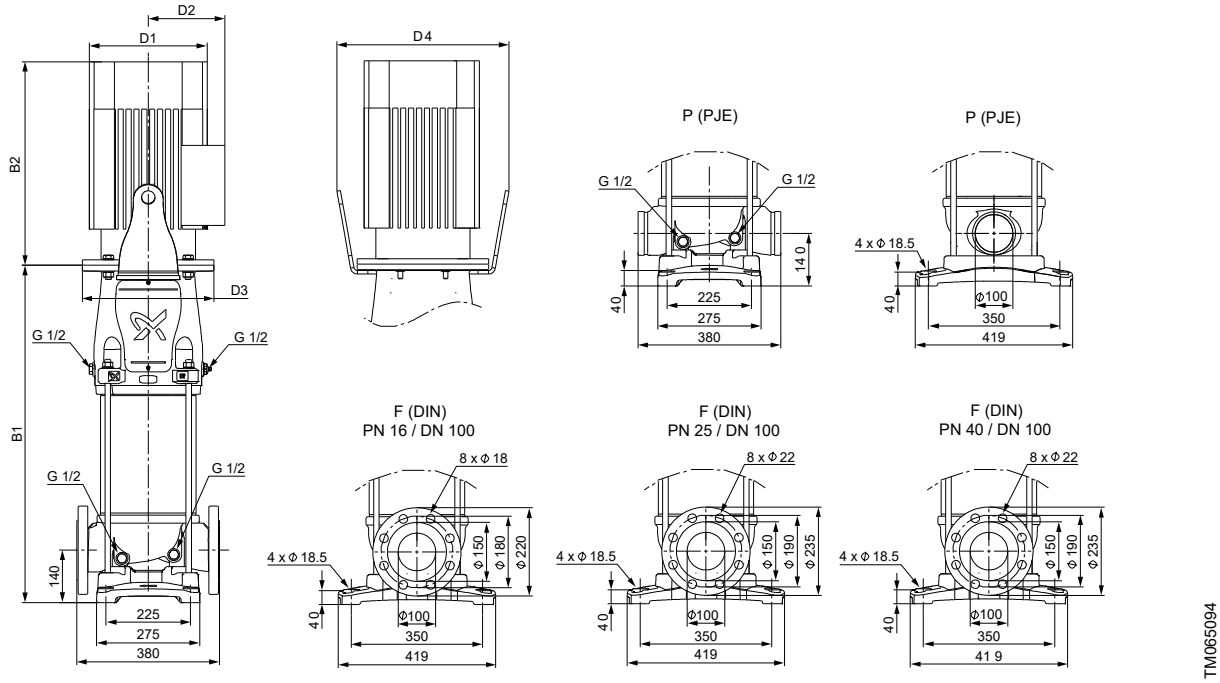

Dimensions and weights

Pump type	Motor P_2 [kW]	Dimension [mm]						Net weight [kg]
		B1	B1+B2	D1	D2	D3	D4	
CRN 95-1-1	5.5	689	1080	220	134	300	-	137
CRN 95-1	7.5	689	1068	260	159	300	-	147
CRN 95-2-2	11	795	1277	318	204	350	-	194
CRN 95-2	15	795	1277	318	204	350	-	206
CRN 95-3-2	18.5	900	1426	318	204	350	-	224
CRN 95-3	22	900	1452	318	204	350	-	239
CRN 95-4	30	1009	1620	396	315	400	492	348
CRN 95-5	37	1114	1750	396	315	400	492	379
CRN 95-6	45	1238	1946	449	338	450	573	480
CRN 95-7	55	1342	2089	497	410	550	732	598
CRN 95-8-2	55	1446	2193	497	410	550	732	604
CRN 95-8 [32)]	75	1446	2320	559	433	550	732	745
CRN 95-9 [32)]	75	1551	2425	559	433	550	732	751
CRN 95-10 [32)]	75	1655	2529	559	433	550	732	757
CRN 95-11 [32)]	90	1760	2634	559	433	550	732	807
CRN 95-12 [32)]	90	1864	2738	559	433	550	732	812

32) Only to be used with soft starter or frequency converter.

CR 125

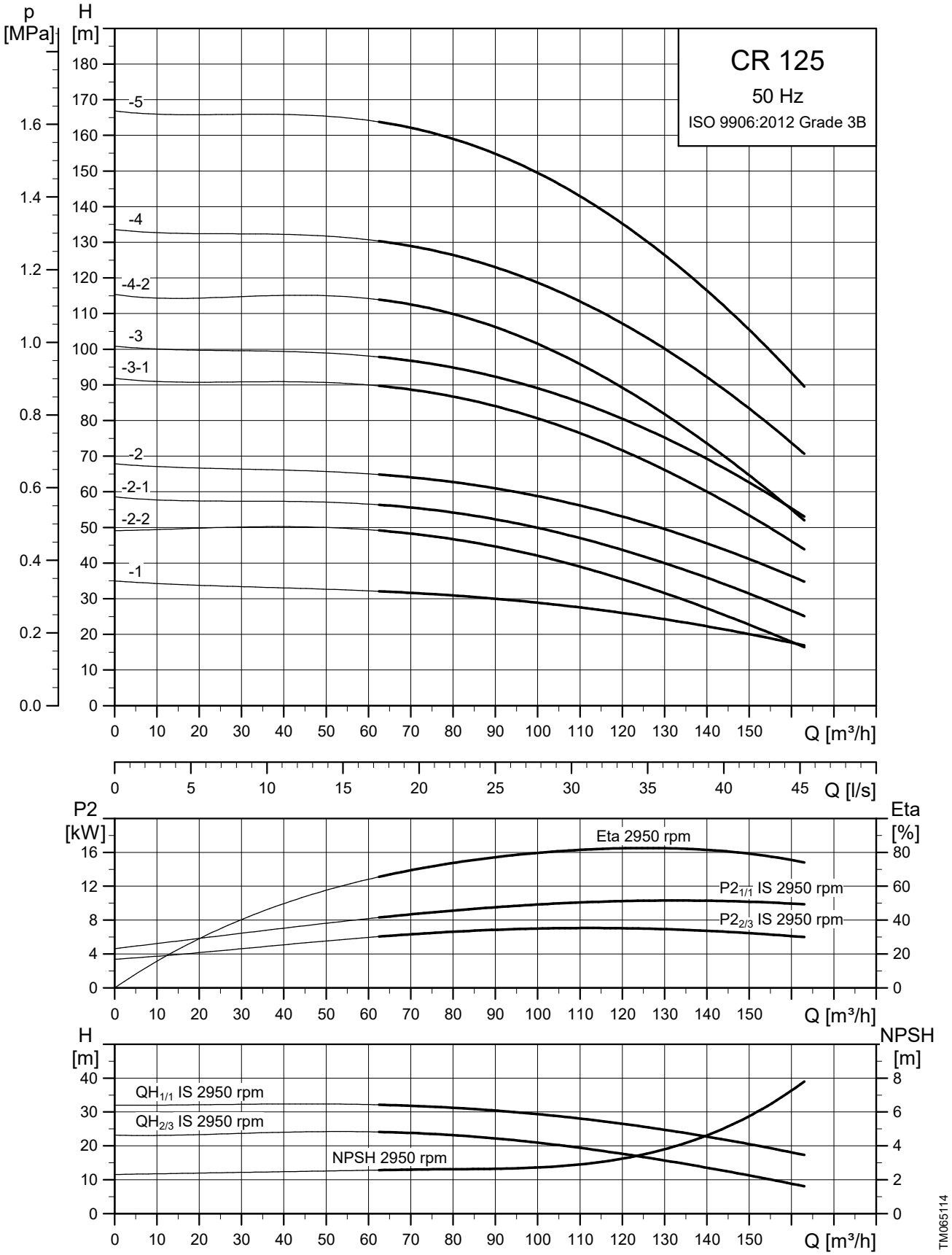

The pump efficiency (ETA) is based on a three-stage pump.

Dimensional sketch

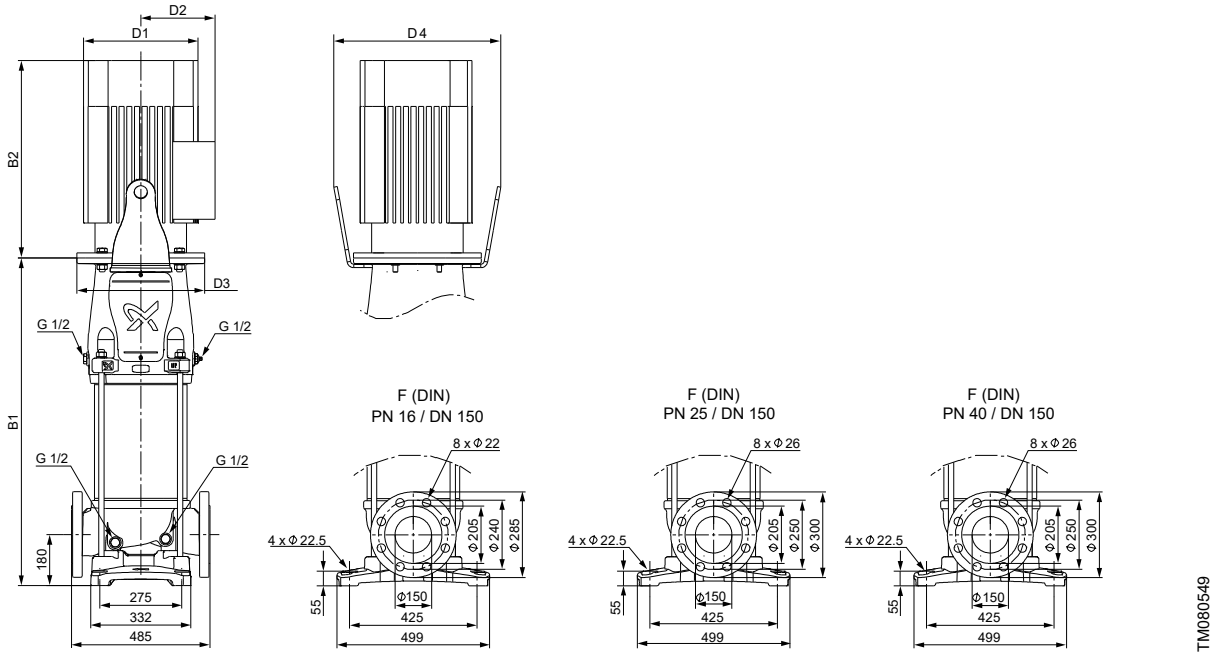

Dimensions and weights

Pump type	Motor P_2 [kW]	Dimension [mm]						Net weight [kg]
		B1	B1+B2	D1	D2	D3	D4	
CR 125-1	11	783	1265	318	204	350	-	233
CR 125-2-2	15	905	1387	318	204	350	-	255
CR 125-2-1	18.5	905	1431	318	204	350	-	268
CR 125-2	22	905	1457	318	204	350	-	283
CR 125-3-1	30	1029	1640	396	315	400	492	396
CR 125-3	37	1029	1665	396	315	400	492	421
CR 125-4-2	37	1151	1787	396	315	400	492	432
CR 125-4	45	1174	1882	449	338	450	573	526
CR 125-5	55	1295	2042	497	410	550	732	647

CRN 125

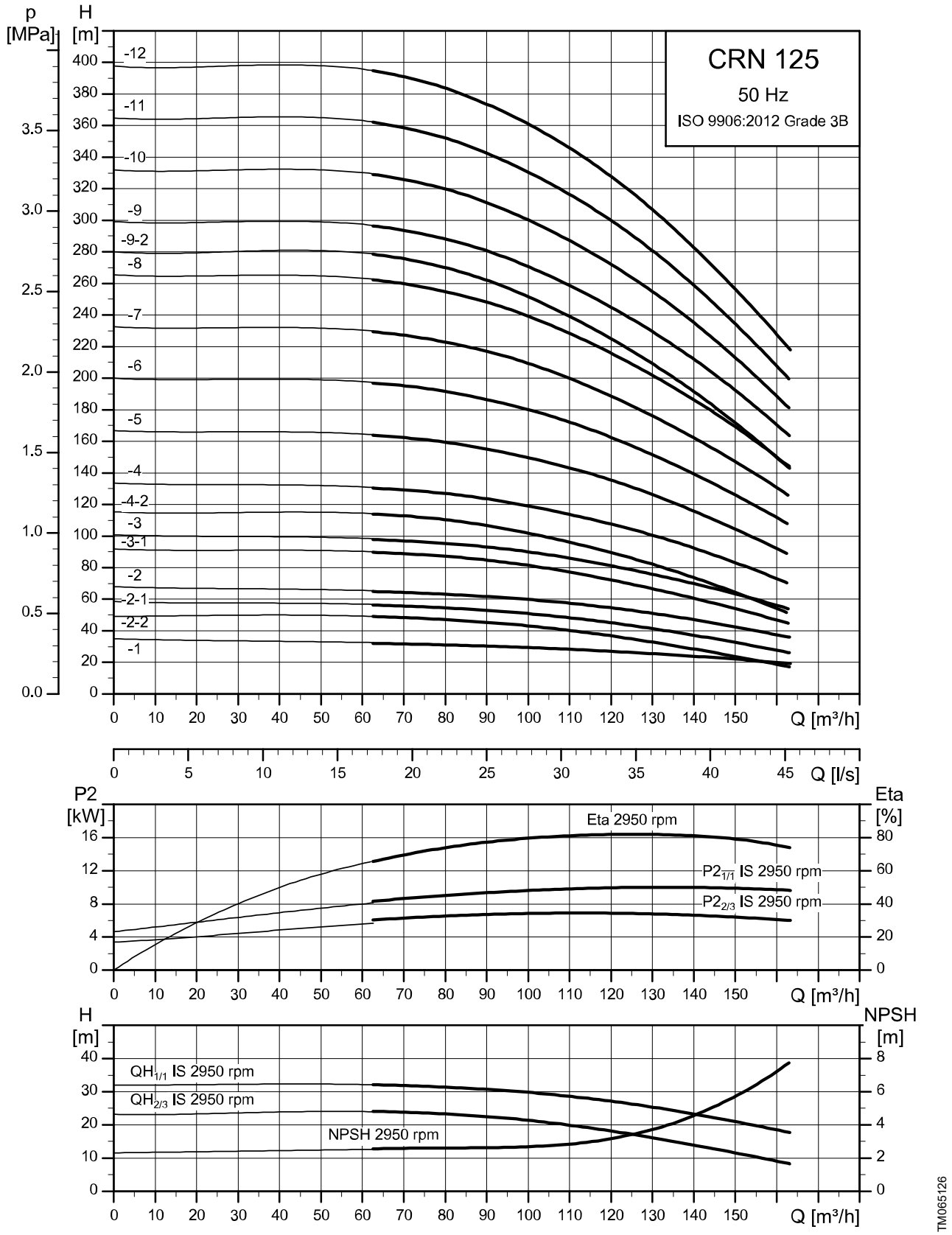

The pump efficiency (ETA) is based on a three-stage pump.

Dimensional sketch

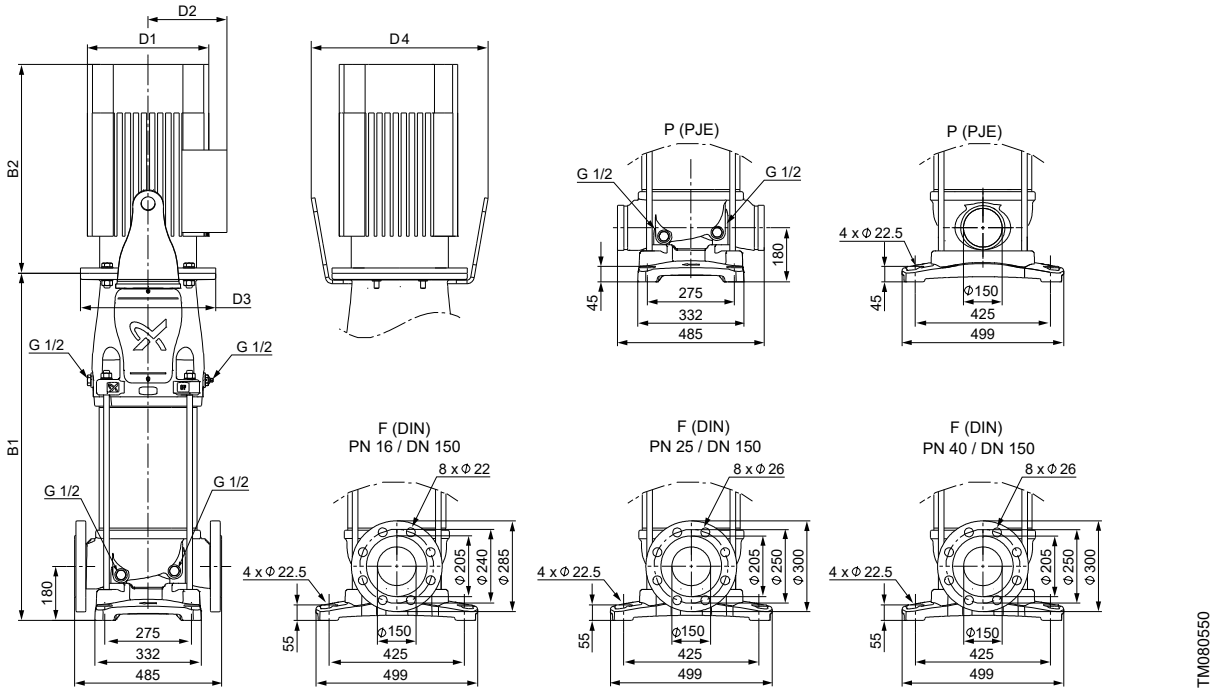

Dimensions and weights

Pump type	Motor P_2 [kW]	Dimension [mm]						Net weight [kg]
		B1	B1+B2	D1	D2	D3	D4	
CRN 125-1	11	783	1265	318	204	350	-	233
CRN 125-2-2	15	905	1387	318	204	350	-	255
CRN 125-2-1	18.5	905	1431	318	204	350	-	268
CRN 125-2	22	905	1457	318	204	350	-	283
CRN 125-3-1	30	1029	1640	396	315	400	492	396
CRN 125-3	37	1029	1665	396	315	400	492	421
CRN 125-4-2	37	1151	1787	396	315	400	492	432
CRN 125-4	45	1174	1882	449	338	450	573	526
CRN 125-5	55	1295	2042	497	410	550	732	647
CRN 125-6	75	1417	2291	559	433	550	732	797
CRN 125-7	75	1539	2413	559	433	550	732	808
CRN 125-8	90	1661	2535	559	433	550	732	862
CRN 125-9-2	90	1783	2657	559	433	550	732	872
CRN 125-9	110	1813	2770	657	539	660	848	1269
CRN 125-10	110	1935	2892	657	539	660	848	1279
CRN 125-11 [33)]	132	2057	3104	657	539	660	848	1385
CRN 125-12 [33)]	132	2179	3226	657	539	660	848	1395

33) Only to be used with soft starter or frequency converter.

CR 155

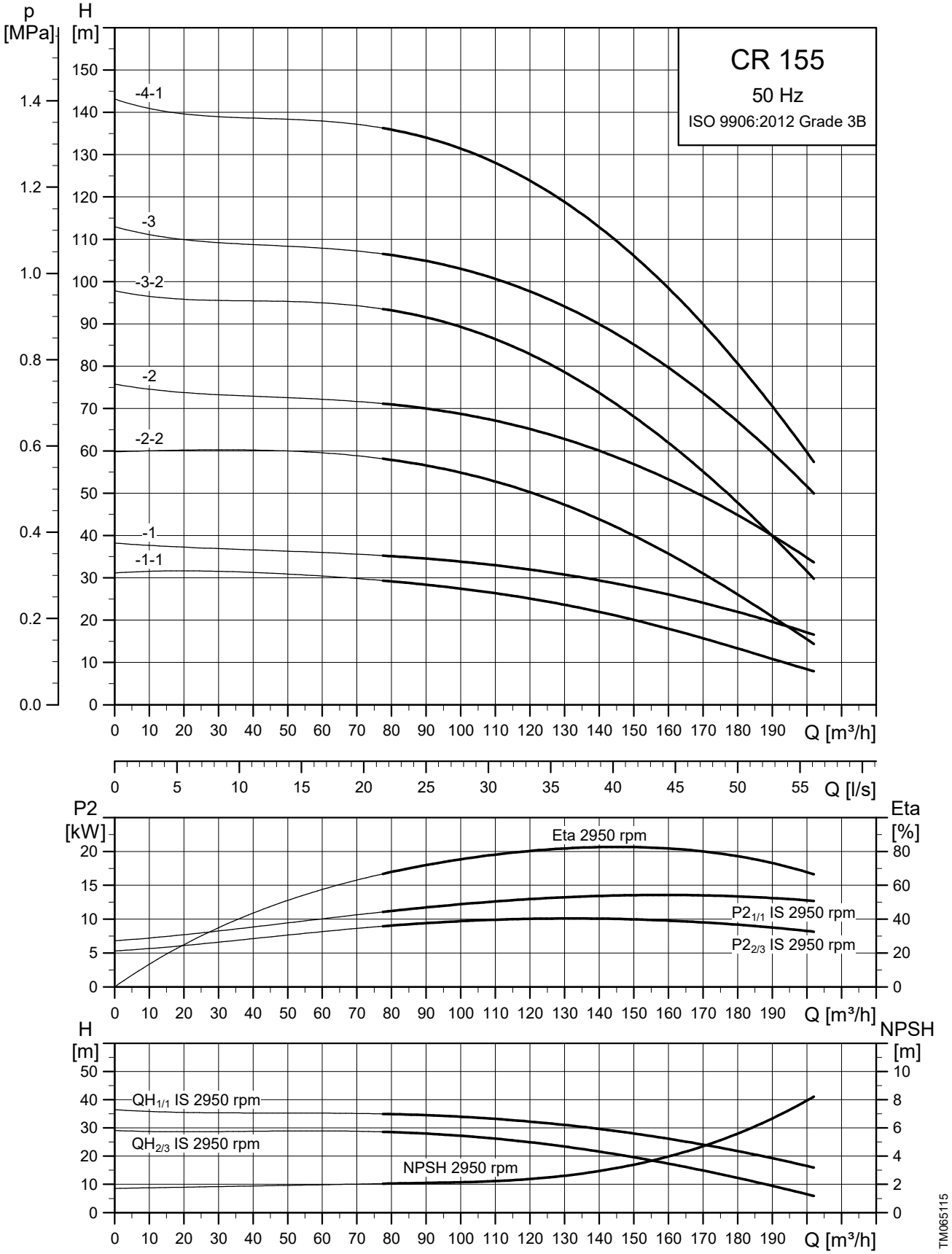

The pump efficiency (ETA) is based on a three-stage pump.

Dimensional sketch

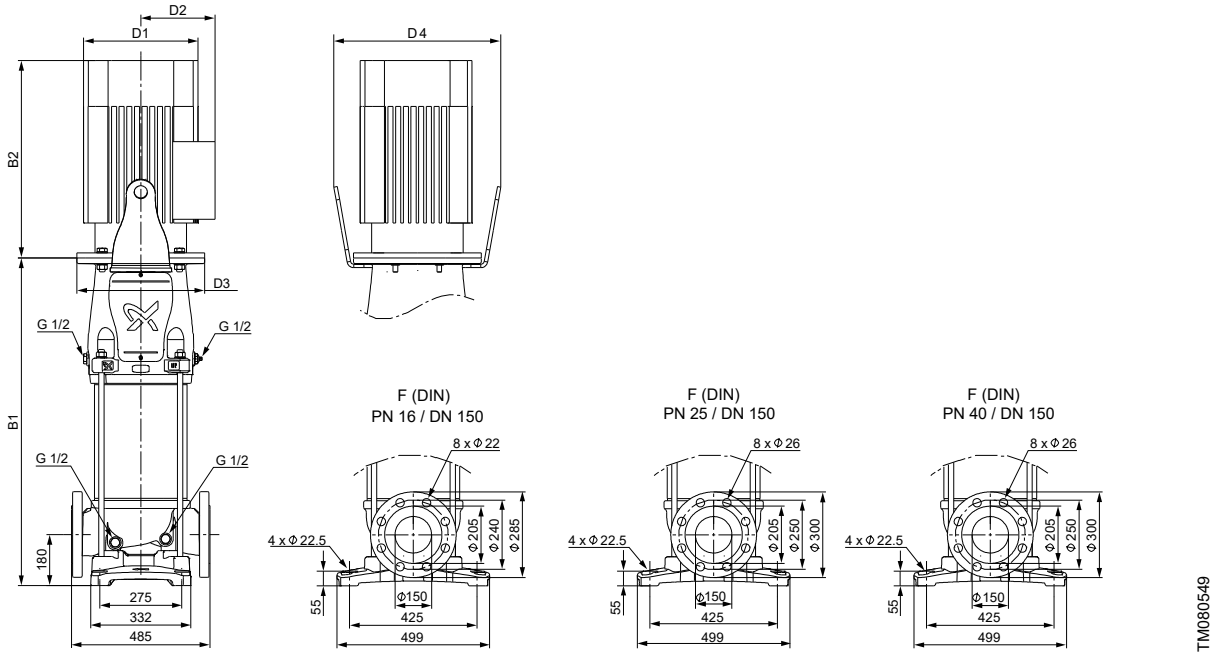

Dimensions and weights

Pump type	Motor P_2 [kW]	Dimension [mm]						Net weight [kg]
		B1	B1+B2	D1	D2	D3	D4	
CR 155-1-1	11	783	1265	318	204	350	-	234
CR 155-1	15	783	1265	318	204	350	-	245
CR 155-2-2	22	905	1457	318	204	350	-	284
CR 155-2	30	907	1518	396	315	400	492	387
CR 155-3-2	37	1029	1665	396	315	400	492	423
CR 155-3	45	1052	1760	449	338	450	573	517
CR 155-4-1	55	1173	1920	497	410	550	732	637

CRN 155

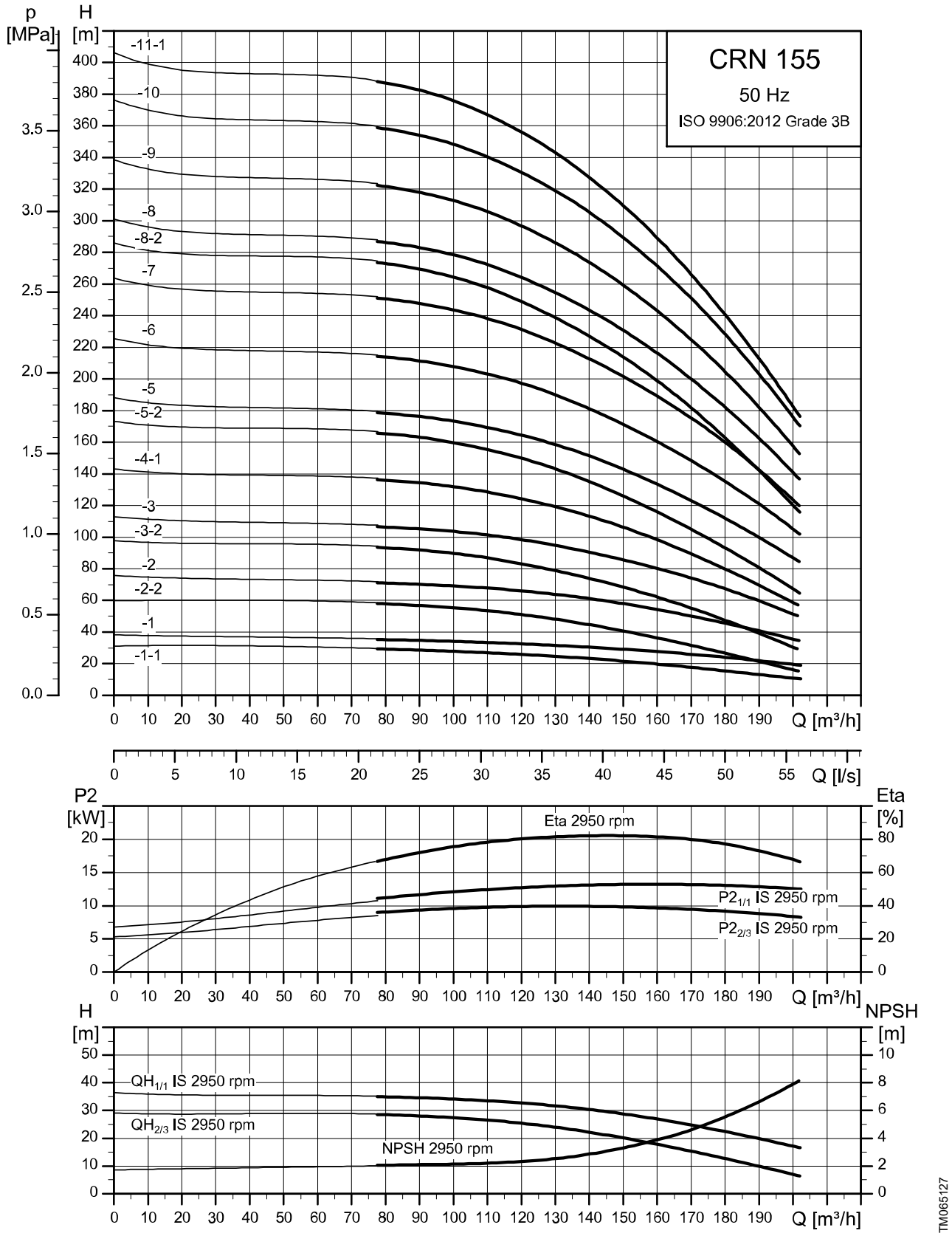

The pump efficiency (ETA) is based on a three-stage pump.

Dimensional sketch

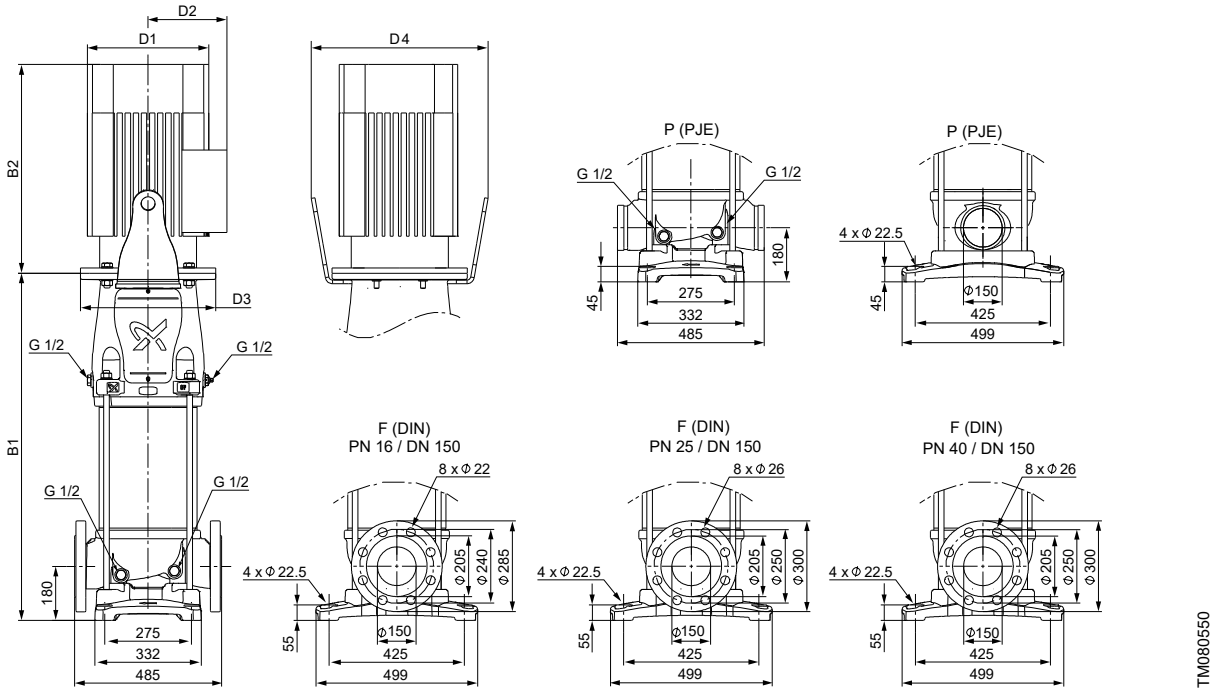

Dimensions and weights

Pump type	Motor P_2 [kW]	Dimension [mm]						Net weight [kg]
		B1	B1+B2	D1	D2	D3	D4	
CRN 155-1-1	11	783	1265	318	204	350	-	234
CRN 155-1	15	783	1265	318	204	350	-	245
CRN 155-2-2	22	905	1457	318	204	350	-	284
CRN 155-2	30	907	1518	396	315	400	492	387
CRN 155-3-2	37	1029	1665	396	315	400	492	423
CRN 155-3	45	1052	1760	449	338	450	573	517
CRN 155-4-1	55	1173	1920	497	410	550	732	637
CRN 155-5-2	75	1295	2169	559	433	550	732	790
CRN 155-5	75	1295	2169	559	433	550	732	790
CRN 155-6	90	1417	2291	559	433	550	732	844
CRN 155-7	110	1569	2526	657	539	660	848	1252
CRN 155-8-2	110	1691	2648	657	539	660	848	1262
CRN 155-8 [34)]	132	1691	2738	657	539	660	848	1358
CRN 155-9 [34)]	132	1813	2860	657	539	660	848	1369
CRN 155-10 [34)]	160	1935	2982	657	539	660	848	1420
CRN 155-11-1 [34)]	160	2057	3104	657	539	660	848	1431

[34)] Only to be used with soft starter or frequency converter.

CR 185

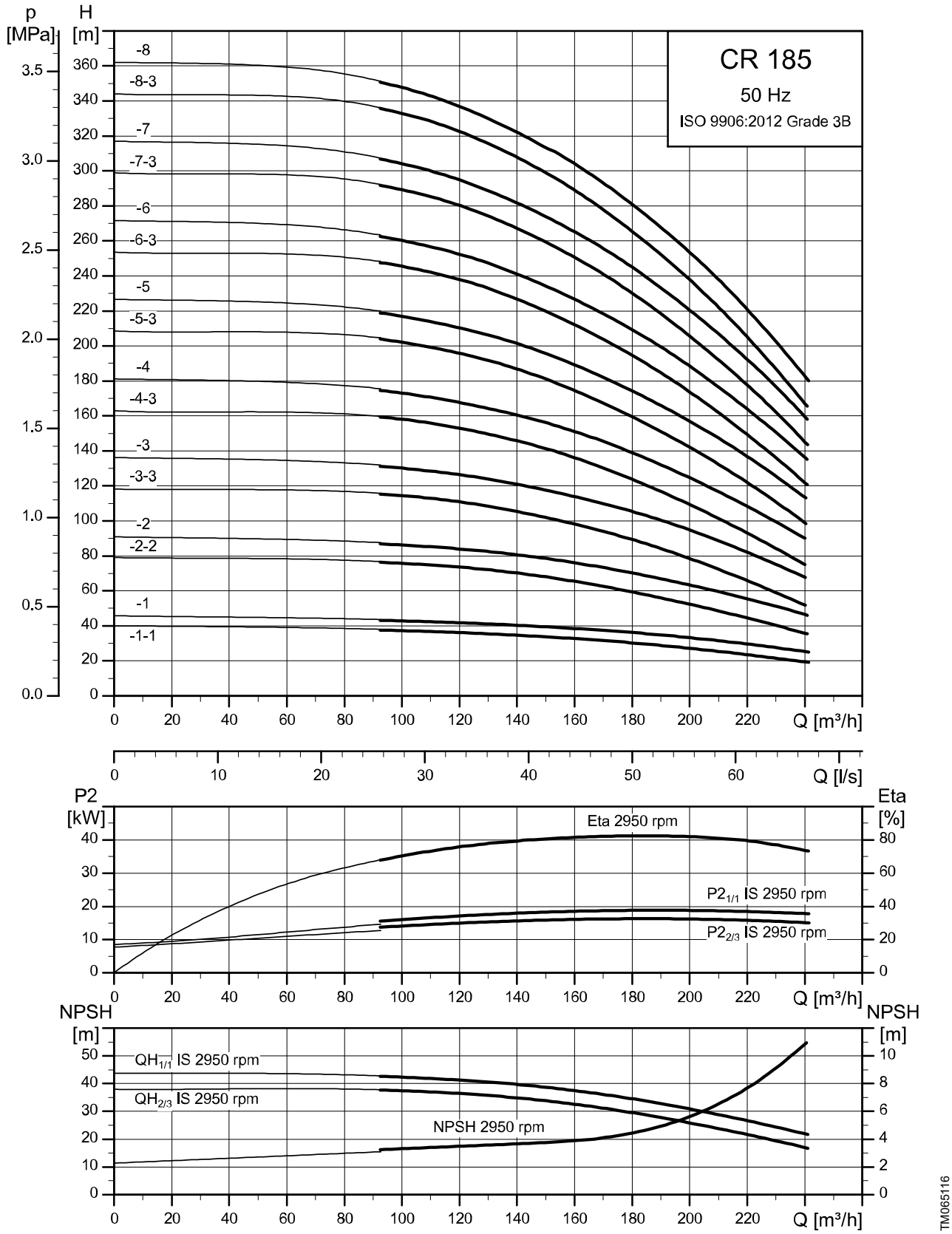

The pump efficiency (ETA) is based on a three-stage pump.

Dimensional sketch

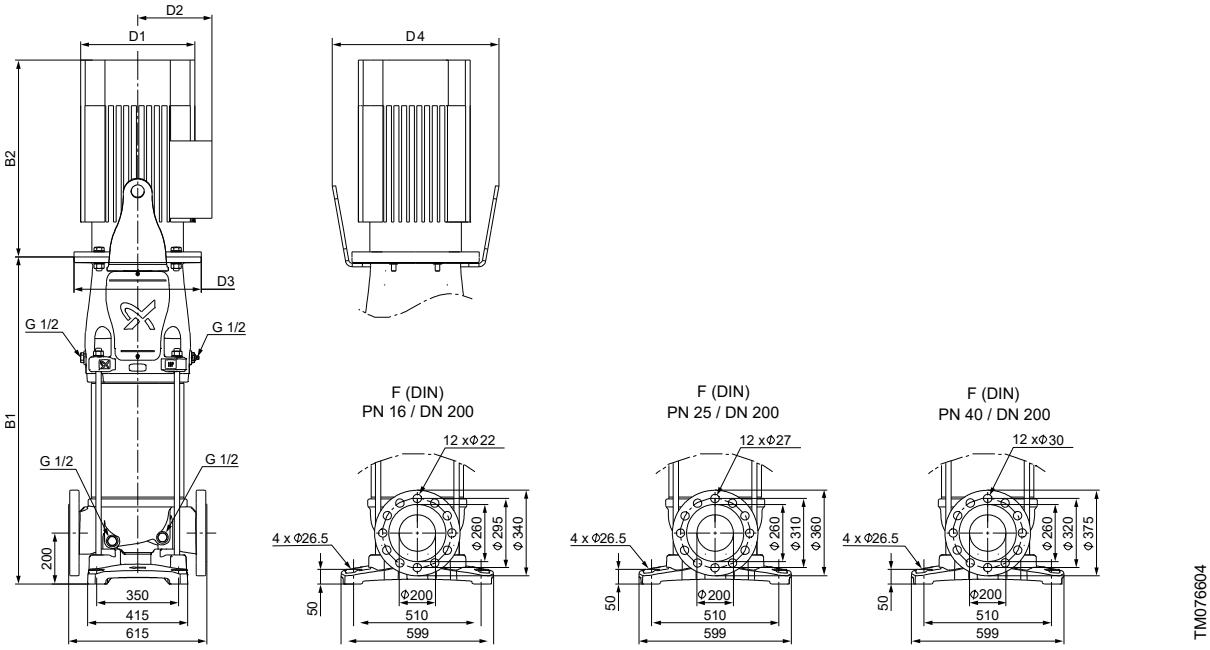

Dimensions and weights

Pump type	Motor P_2 [kW]	Dimension [mm]						Net weight [kg]
		B1	B1+B2	D1	D2	D3	D4	
CR 185-1-1	18.5	854	1380	318	204	350	-	345
CR 185-1	22	854	1406	318	204	350	-	360
CR 185-2-2	37	986	1622	396	315	400	492	502
CR 185-2	45	1006	1714	449	338	450	573	596
CR 185-3-3	55	1140	1887	497	410	550	732	722
CR 185-3	75	1140	2014	559	433	550	732	862
CR 185-4-3	75	1268	2142	559	433	550	732	881
CR 185-4	90	1268	2142	559	433	550	732	925
CR 185-5-3	110	1420	2377	657	539	660	848	1329
CR 185-5	110	1420	2377	657	539	660	848	1329
CR 185-6-3	132	1548	2595	657	539	660	848	1443
CR 185-6	132	1548	2595	657	539	660	848	1443
CR 185-7-3	160	1676	2723	657	539	660	848	1498
CR 185-7	160	1676	2723	657	539	660	848	1498
CR 185-8-3	200	1804	2991	657	539	660	848	1703
CR 185-8	200	1804	2991	657	539	660	848	1703

CRN 185

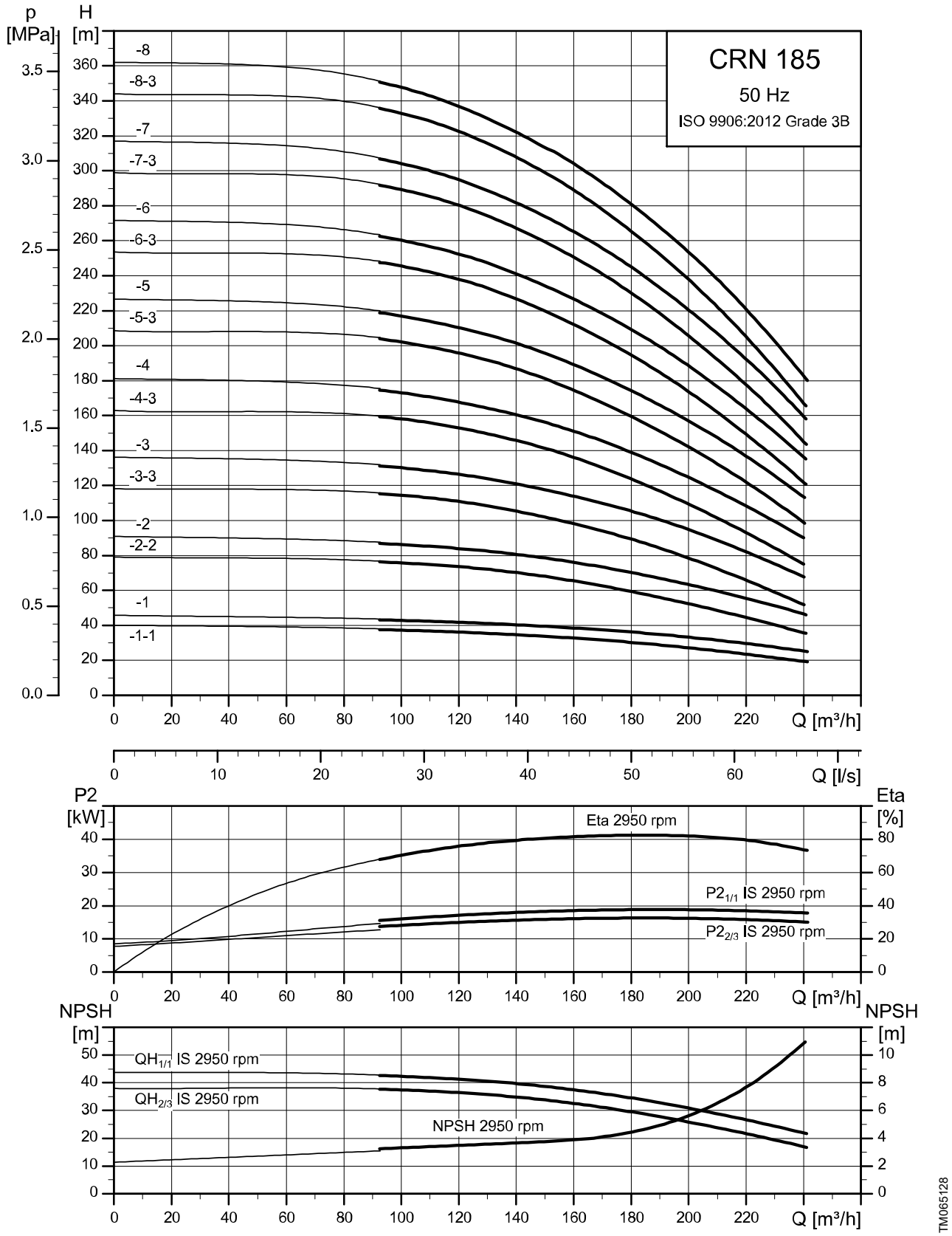

The pump efficiency (ETA) is based on a three-stage pump.

Dimensional sketch

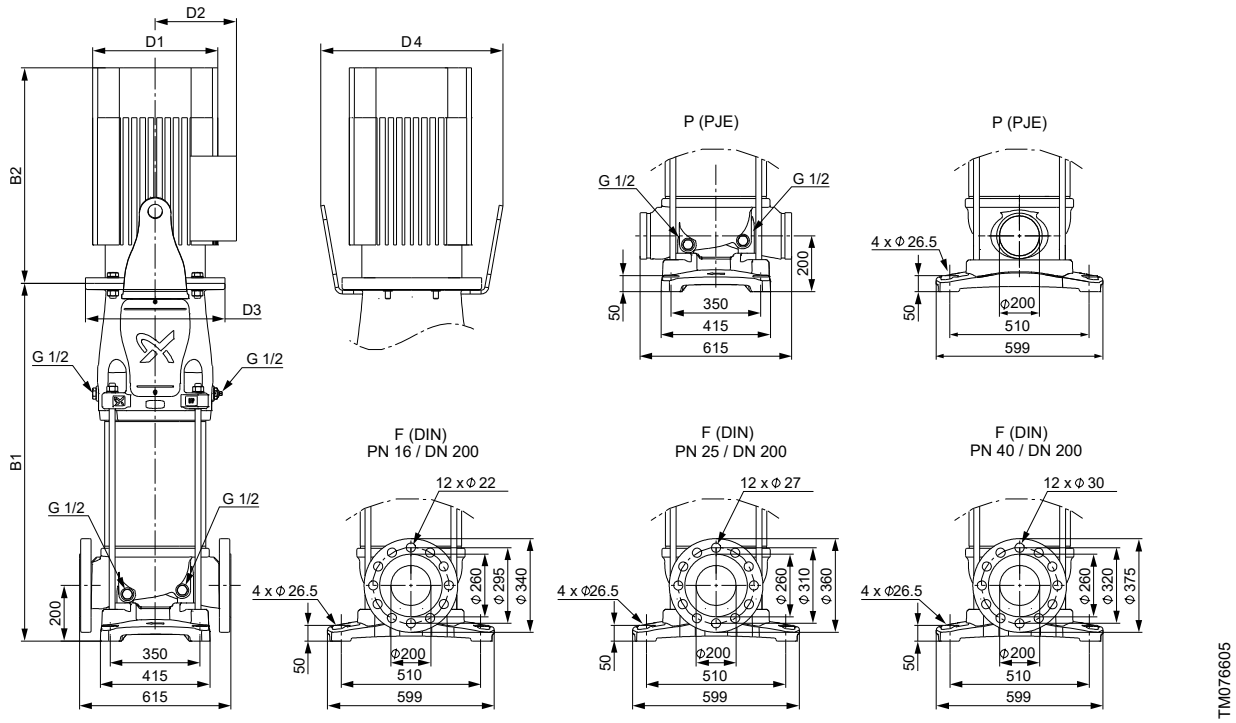

Dimensions and weights

Pump type	Motor P_2 [kW]	Dimension [mm]						Net weight [kg]
		B1	B1+B2	D1	D2	D3	D4	
CRN 185-1-1	18.5	854	1380	318	204	350	-	345
CRN 185-1	22	854	1406	318	204	350	-	360
CRN 185-2-2	37	986	1622	396	315	400	492	502
CRN 185-2	45	1006	1714	449	338	450	573	596
CRN 185-3-3	55	1140	1887	497	410	550	732	722
CRN 185-3	75	1140	2014	559	433	550	732	862
CRN 185-4-3	75	1268	2142	559	433	550	732	881
CRN 185-4	90	1268	2142	559	433	550	732	925
CRN 185-5-3	110	1420	2377	657	539	660	848	1329
CRN 185-5	110	1420	2377	657	539	660	848	1329
CRN 185-6-3	132	1548	2595	657	539	660	848	1443
CRN 185-6	132	1548	2595	657	539	660	848	1443
CRN 185-7-3	160	1676	2723	657	539	660	848	1498
CRN 185-7	160	1676	2723	657	539	660	848	1498
CRN 185-8-3	200	1804	2991	657	539	660	848	1703
CRN 185-8	200	1804	2991	657	539	660	848	1703

CR 215

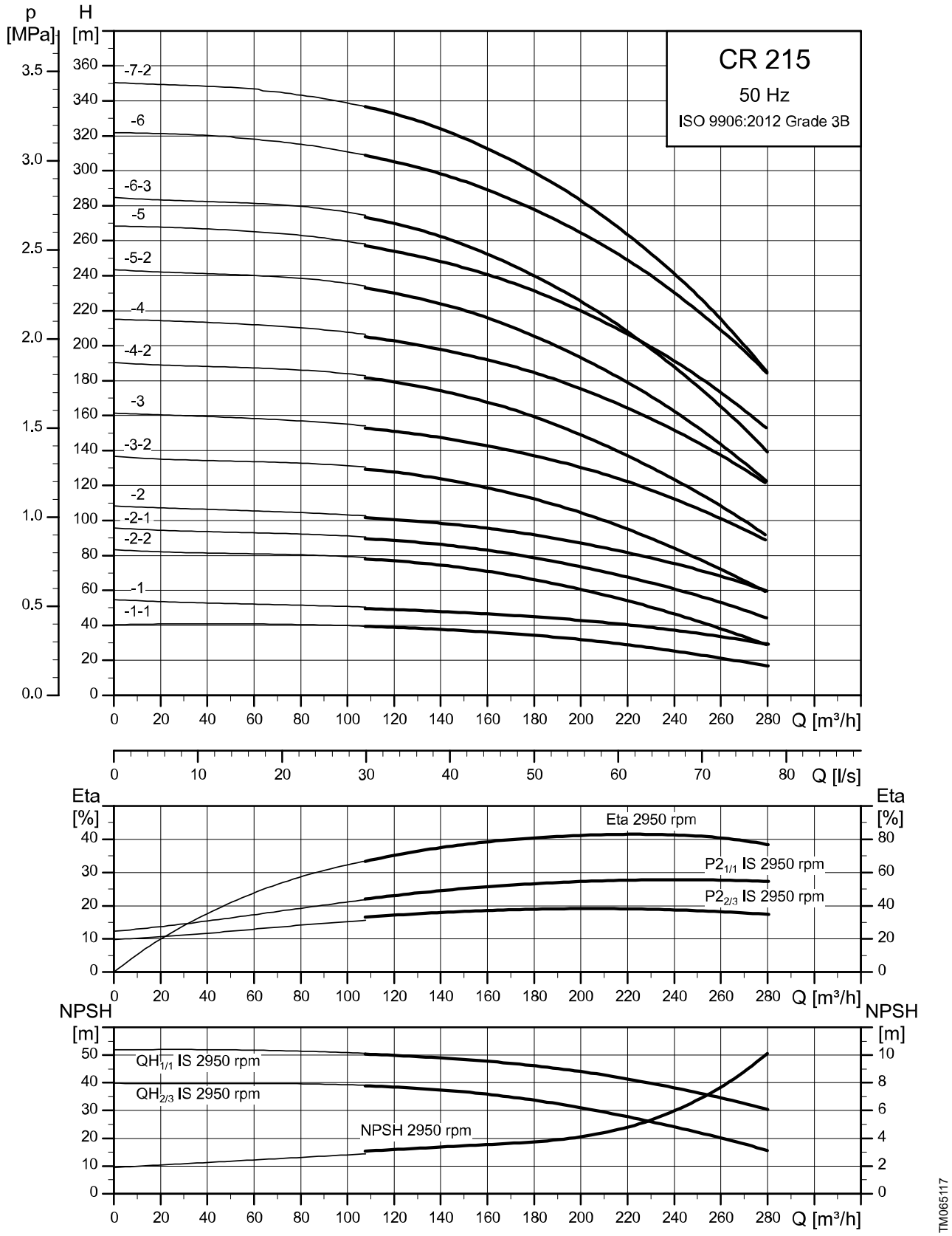

The pump efficiency (ETA) is based on a three-stage pump.

Dimensional sketch

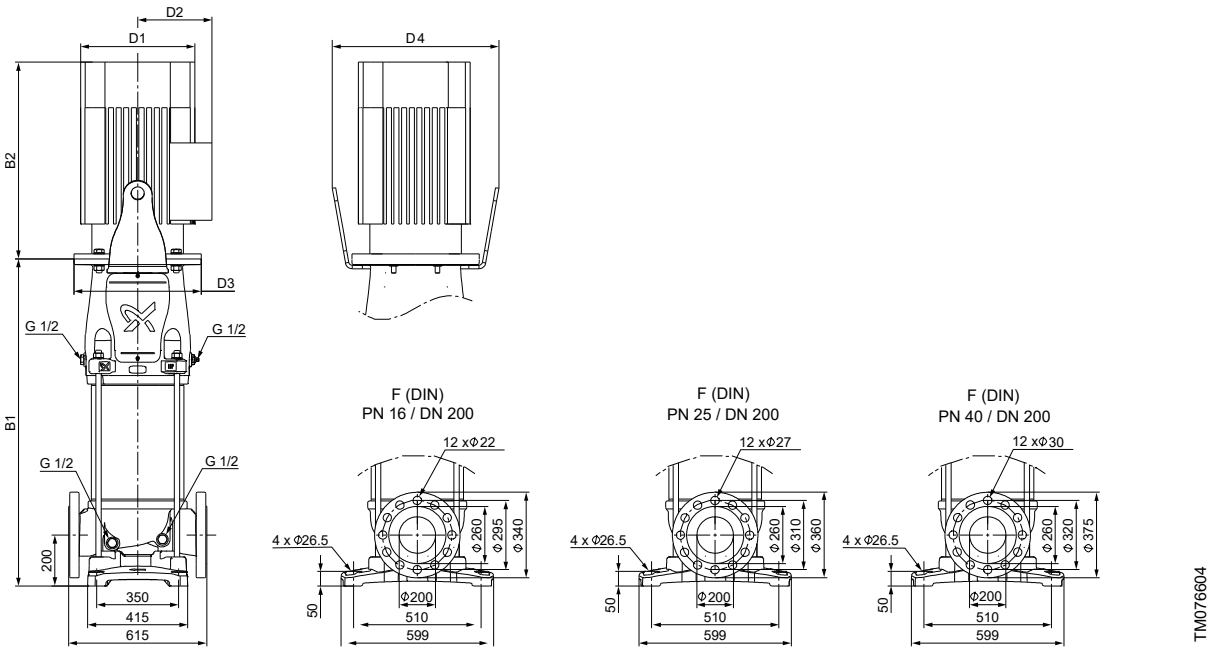

Dimensions and weights

Pump type	Motor P_2 [kW]	Dimension [mm]						Net weight [kg]
		B1	B1+B2	D1	D2	D3	D4	
CR 215-1-1	22	854	1406	318	204	350	-	361
CR 215-1	37	858	1494	396	315	400	492	488
CR 215-2-2	45	1006	1714	449	338	450	573	597
CR 215-2-1	55	1012	1759	497	410	550	732	709
CR 215-2	75	1012	1886	559	433	550	732	849
CR 215-3-2	75	1140	2014	559	433	550	732	864
CR 215-3	90	1140	2014	559	433	550	732	908
CR 215-4-2	110	1292	2249	657	539	660	848	1318
CR 215-4	132	1292	2339	657	539	660	848	1414
CR 215-5-2	132	1420	2467	657	539	660	848	1429
CR 215-5	160	1420	2467	657	539	660	848	1469
CR 215-6-3	160	1548	2595	657	539	660	848	1488
CR 215-6	200	1548	2735	657	539	660	848	1678
CR 215-7-2	200	1676	2863	657	539	660	848	1693

CRN 215

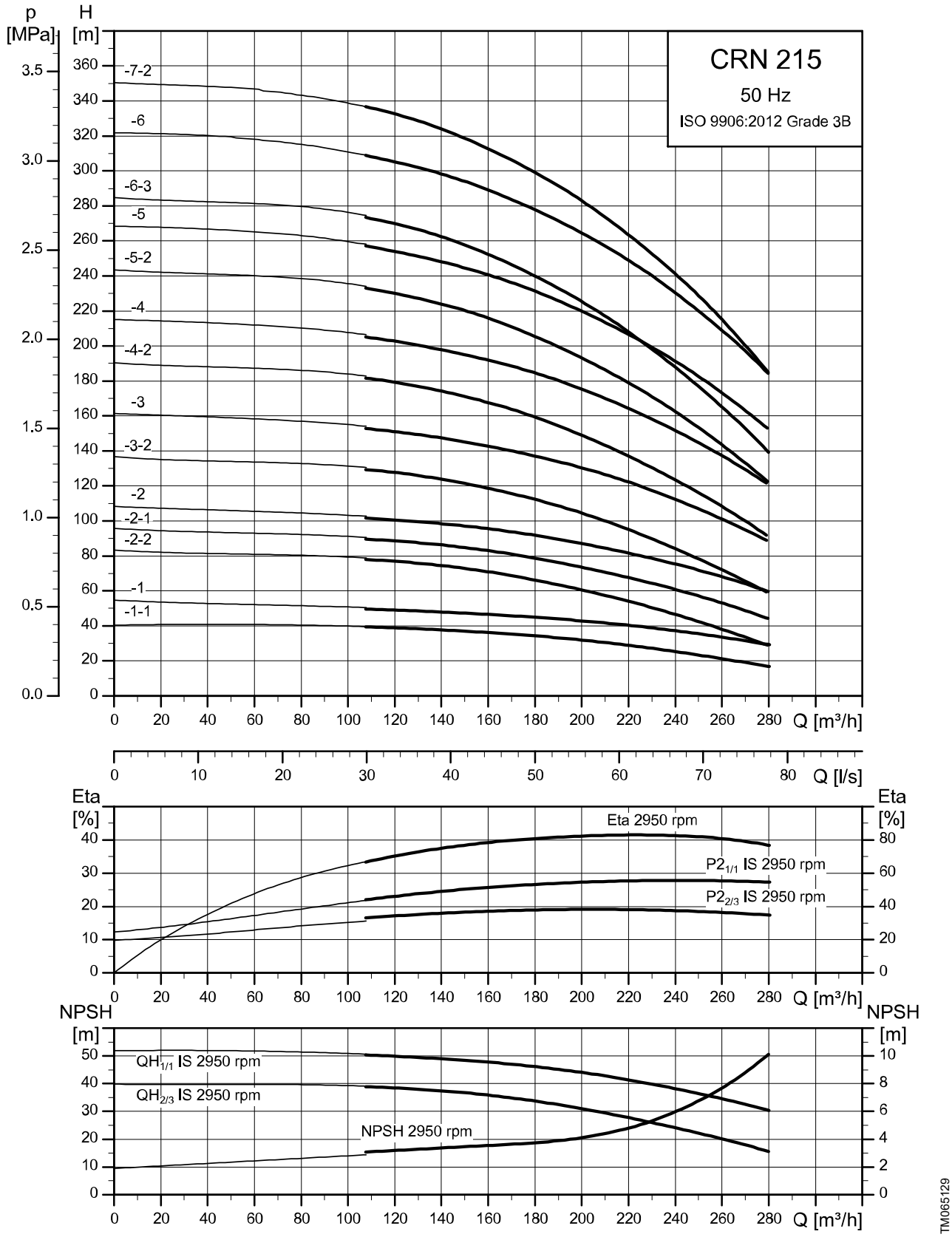

The pump efficiency (ETA) is based on a three-stage pump.

Dimensional sketch

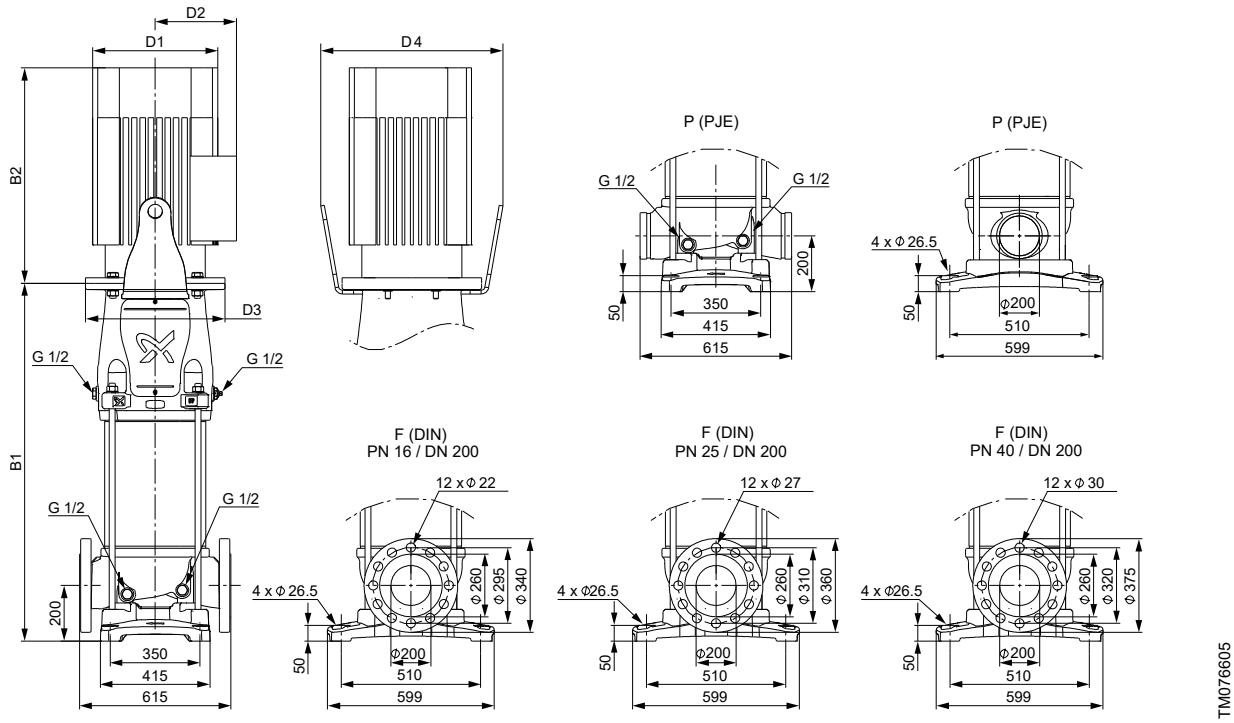

Dimensions and weights

Pump type	Motor P_2 [kW]	Dimension [mm]						Net weight [kg]
		B1	B1+B2	D1	D2	D3	D4	
CRN 215-1-1	22	854	1406	318	204	350	-	361
CRN 215-1	37	858	1494	396	315	400	492	488
CRN 215-2-2	45	1006	1714	449	338	450	573	597
CRN 215-2-1	55	1012	1759	497	410	550	732	709
CRN 215-2	75	1012	1886	559	433	550	732	849
CRN 215-3-2	75	1140	2014	559	433	550	732	864
CRN 215-3	90	1140	2014	559	433	550	732	908
CRN 215-4-2	110	1292	2249	657	539	660	848	1318
CRN 215-4	132	1292	2339	657	539	660	848	1414
CRN 215-5-2	132	1420	2467	657	539	660	848	1429
CRN 215-5	160	1420	2467	657	539	660	848	1469
CRN 215-6-3	160	1548	2595	657	539	660	848	1488
CRN 215-6	200	1548	2735	657	539	660	848	1678
CRN 215-7-2	200	1676	2863	657	539	660	848	1693

CR 255

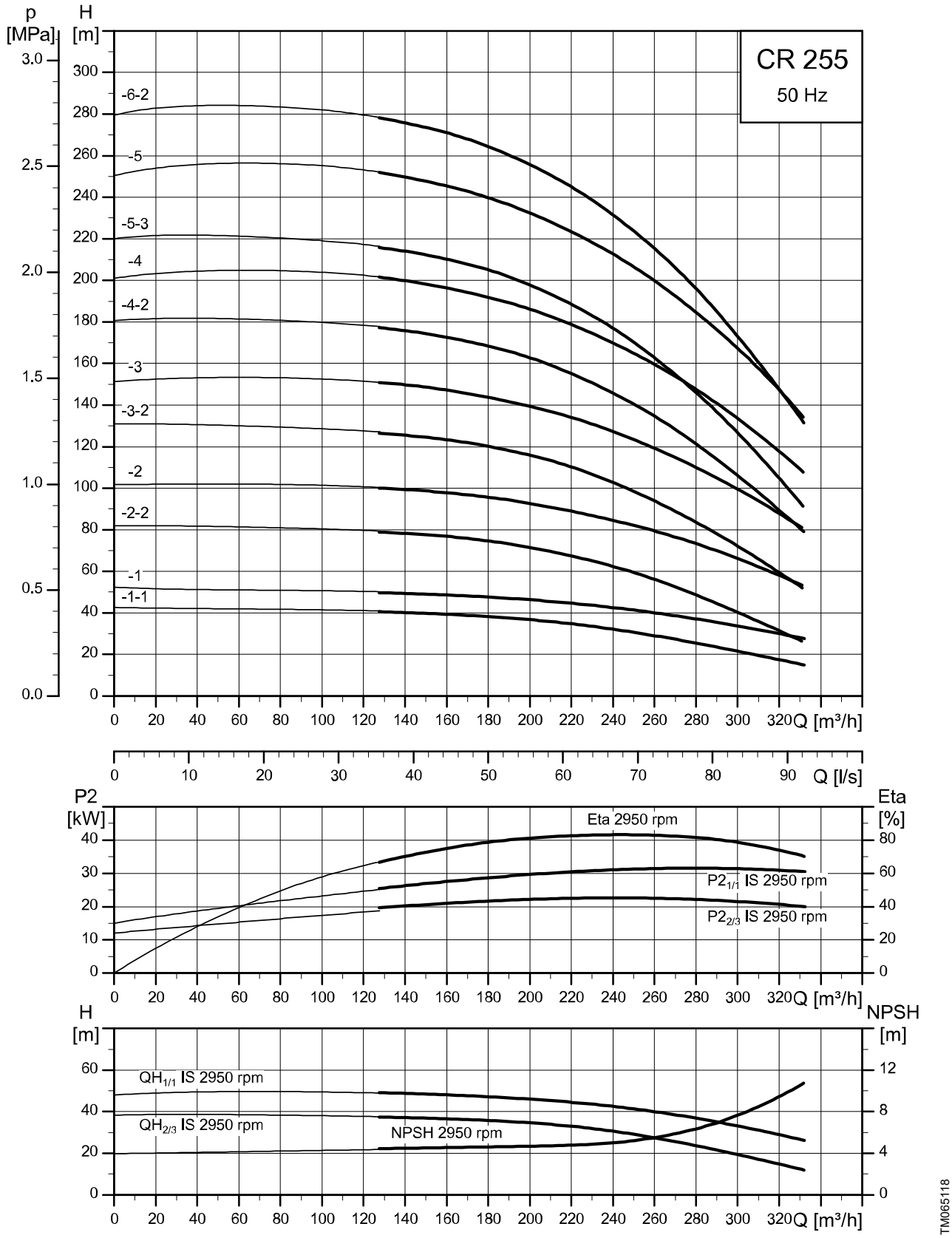

The pump efficiency (ETA) is based on a three-stage pump.

Dimensional sketch

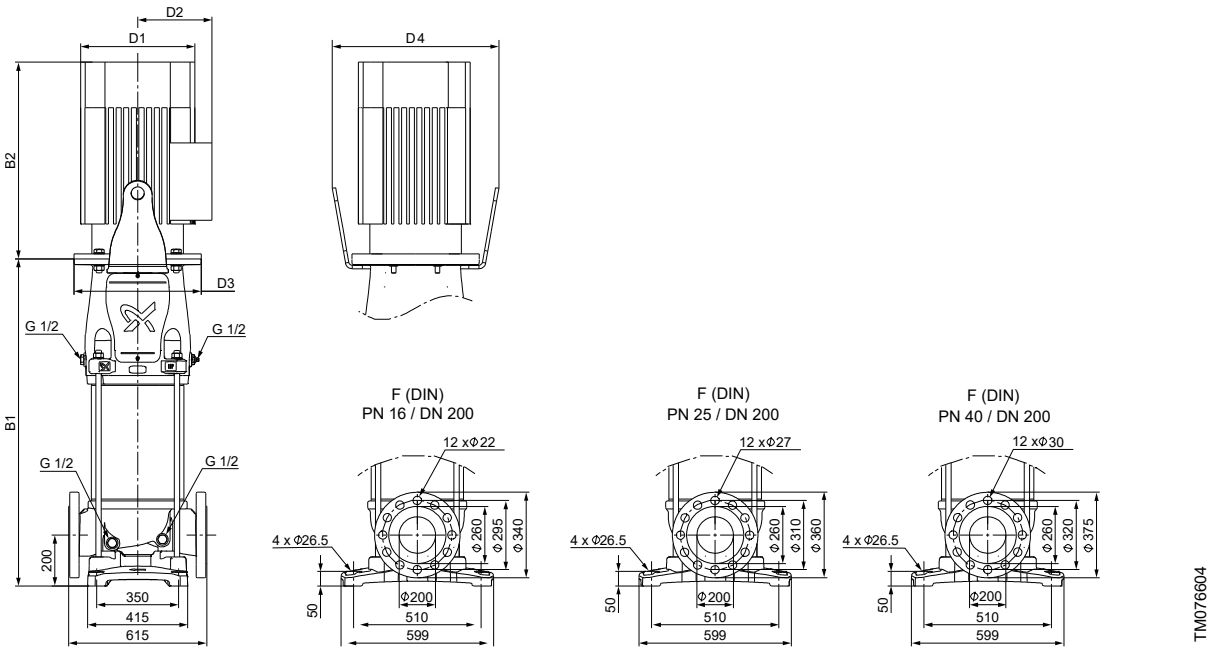

Dimensions and weights

Pump type	Motor P_2 [kW]	Dimension [mm]						Net weight [kg]
		B1	B1+B2	D1	D2	D3	D4	
CR 255-1-1	30	858	1469	396	315	400	492	463
CR 255-1	45	878	1586	449	338	450	573	582
CR 255-2-2	55	1012	1759	497	410	550	732	709
CR 255-2	75	1012	1886	559	433	550	732	849
CR 255-3-2	90	1140	2014	559	433	550	732	908
CR 255-3	110	1164	2121	657	539	660	848	1302
CR 255-4-2	132	1292	2339	657	539	660	848	1414
CR 255-4	160	1292	2339	657	539	660	848	1454
CR 255-5-3	160	1420	2467	657	539	660	848	1472
CR 255-5	200	1420	2607	657	539	660	848	1662
CR 255-6-2	200	1548	2735	657	539	660	848	1678

CRN 255

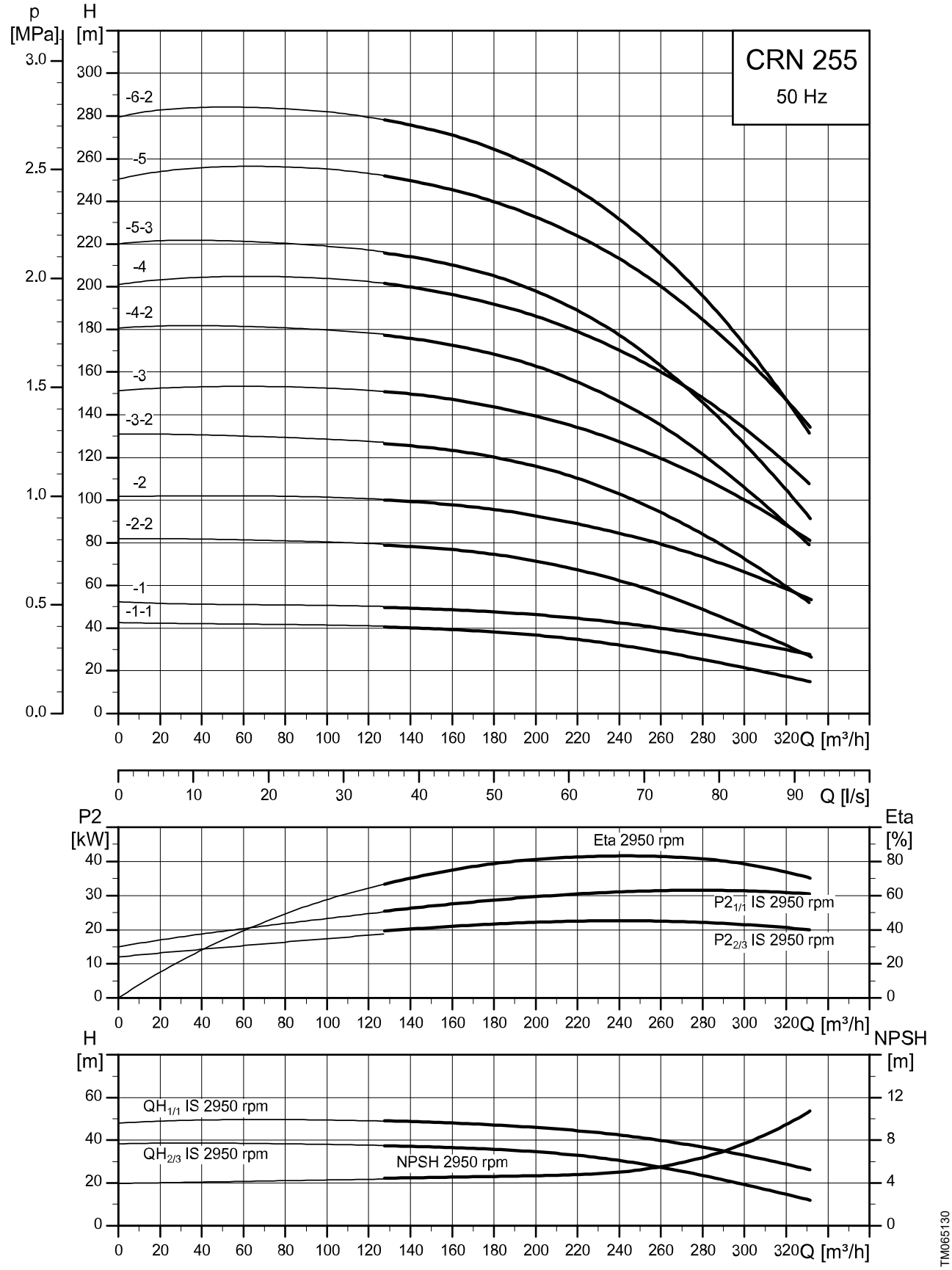

The pump efficiency (ETA) is based on a three-stage pump.

Dimensional sketch

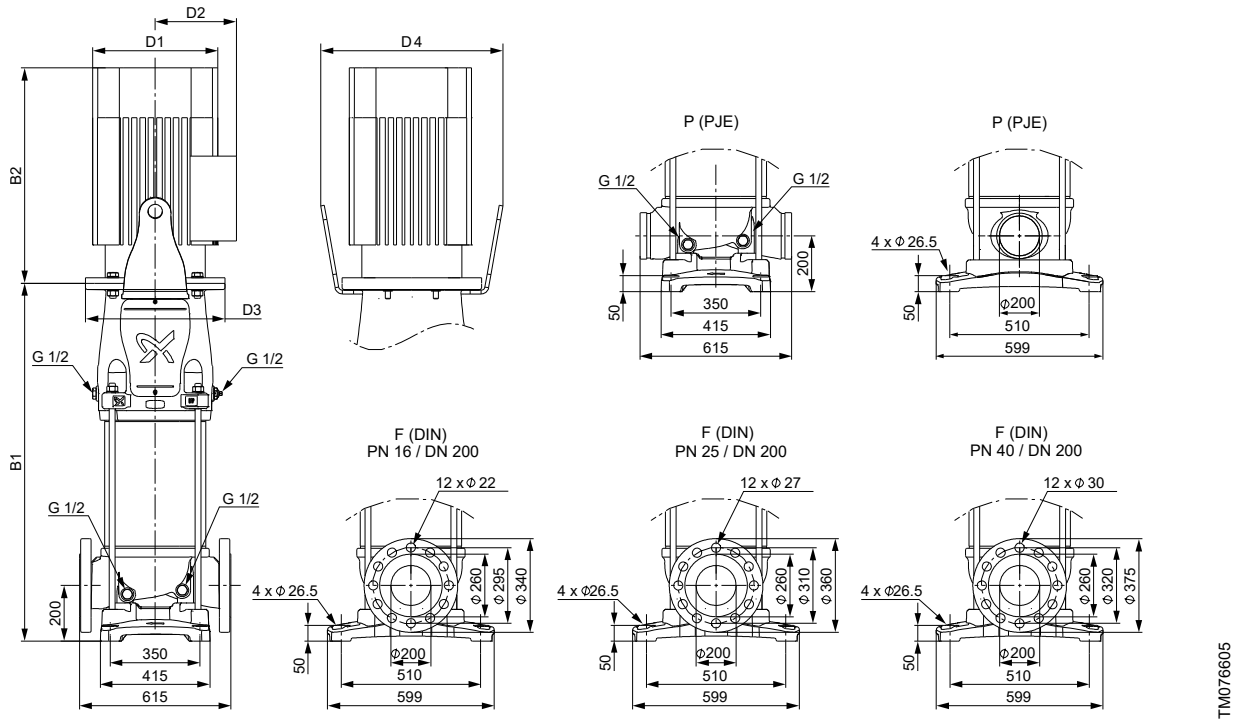

Dimensions and weights

Pump type	Motor P_2 [kW]	Dimension [mm]						Net weight [kg]
		B1	B1+B2	D1	D2	D3	D4	
CRN 255-1-1	30	858	1469	396	315	400	492	463
CRN 255-1	45	878	1586	449	338	450	573	582
CRN 255-2-2	55	1012	1759	497	410	550	732	709
CRN 255-2	75	1012	1886	559	433	550	732	849
CRN 255-3-2	90	1140	2014	559	433	550	732	908
CRN 255-3	110	1164	2121	657	539	660	848	1302
CRN 255-4-2	132	1292	2339	657	539	660	848	1414
CRN 255-4	160	1292	2339	657	539	660	848	1454
CRN 255-5-3	160	1420	2467	657	539	660	848	1472
CRN 255-5	200	1420	2607	657	539	660	848	1662
CRN 255-6-2	200	1548	2735	657	539	660	848	1678

11. Motor data

2-pole motors for CR, CRI, CRN, 50 Hz

MG

TM031711

Motor P2 [kW]	Frame size	Standard voltage [V]	Full-load current $I_{1/1}$ [A]	Power factor Cos $\varphi_{1/1}$	Efficiency class	Motor eff. η [%]	Starting current I_{start} [%]	Speed [rpm]
0.37 [35]	71A	220-240Δ/380-415Y	1.74 / 1.00	0.80 - 0.70	IE3	73.8	490-530	2850-2880
0.55 [35]	71B	220-240Δ/380-415Y	2.50 / 1.44	0.80 - 0.70	IE3	77.8	580-620	2830-2850
0.75 [35]	80A	220-240Δ/380-415Y	3.30 / 1.90	0.81 - 0.71	IE3	80.7	580-620	2840-2870
1.1 [35]	80C	220-240Δ/380-415Y	4.35 / 2.50	0.83 - 0.76	IE3	82.7	450-500	2840-2870
1.5 [35]	90SD	220-240Δ/380-415Y	5.70 / 3.30	0.84 - 0.78	IE3	84.2	750-820	2890-2910
2.2 [35]	90LE	380-415Δ	4.65	0.86 - 0.80	IE3	85.9	840-920	2890-2910
3 [35]	100LC	380-415Δ	6.30	0.87 - 0.82	IE3	87.1	840-920	2900-2920
4 [36]	112MC	380-415Δ	7.90	0.87	IE3	88.1	1000	2920-2940
5.5 [36]	132SC	380-415Δ	11.00	0.87 - 0.82	IE3	89.2	1080-1180	2920-2940
7.5 [36]	132SB	380-415Δ/660-690Y	14.4 - 14 / 8.3 - 8.1	0.88 - 0.82	IE3	90.1	780-910	2910-2920
11 [36]	160MB	380-415Δ/660-690Y	20.8 - 19.8 / 12 - 11.8	0.88 - 0.84	IE3	91.2	660-780	2940-2950
15 [36]	160MD	380-415Δ/660-690Y	28-26 / 16.2 - 15.6	0.89 - 0.87	IE3	91.9	660-780	2930-2950
18.5 [36]	160LB	380-415Δ/660-690Y	34.5 - 32.5 / 20 - 18.8	0.89 - 0.85	IE3	92.4	830-980	2940-2950
22 [36]	180MB	380-415Δ/660-690Y	39.5 / 22.8	0.90	IE3	92.7	830	2950

Innomotics

TM031710

30 [36]	200L	380-420Δ/660-725Y	53-51 / 31 - 29.5	0.87	IE3	93.3	700	2955
37 [36]	200L	380-420Δ/660-725Y	65-63 / 37.5 - 36	0.88	IE3	93.7	710	2955
45 [36]	225M	380-420Δ/660-725Y	78-74 / 45-43	0.89	IE3	94.0	690	2960
55 [36]	250M	380-420Δ/660-725Y	95-90 / 55-52	0.89	IE3	94.3	670	2975
75 [35]	280S	380-420Δ/660-725Y	126 / 73	0.90	IE4	95.6	850	2978
90 [35]	280M	380-420Δ/660-725Y	151 / 87	0.90	IE4	95.8	850	2980
110 [35]	315S	380-420Δ/660-725Y	184 / 107	0.90	IE4	96.0	910	2988
132 [35]	315M	380-420Δ/660-725Y	220 / 128	0.90	IE4	96.2	980	2988
160 [35]	315L	380-420Δ/660-725Y	265 / 154	0.90	IE4	96.3	960	2986
200 [35]	315L	380-420Δ/660-725Y	330 / 191	0.91	IE4	96.5	970	2986

[35] Deep-groove ball bearings

[36] Angular contact bearing mounted in drive end

12. List of pumped liquids

A number of typical liquids are listed below.

Other pump versions may be applicable, but those stated in the list are considered to be the best choices.

The table is intended as a general guide only and cannot replace actual testing of the pumped liquids and pump materials under specific working conditions.

Therefore, use the list with some caution. Factors such as those mentioned below may affect the chemical resistance of a specific pump version:

- concentration of the pumped liquid
- liquid temperature
- pressure.

Take safety precautions when pumping dangerous liquids.

Notes

D	Often with additives.
E	The density and/or viscosity differ from that/those of water. Take this factor into account when calculating motor output and pump performance.
F	Pump selection depends on many factors. Contact Grundfos.
H	Risk of crystallisation/precipitation in shaft seal.
1	Highly flammable liquid.
2	Combustible liquid.
3	Insoluble in water.
4	Low self-ignition point.

Pumped liquid	Chemical formula	Note	Liquid concentration, liquid temperature	CRECR	CRNECRN
Acetic acid	CH_3COOH	-	5 %, 20 °C	-	HQQE
Acetone	CH_3COCH_3	1, F	100 %, 20 °C	-	HQQE
Alkaline degreasing agent		D, F	-	HQQE	-
Ammonium bicarbonate	NH_4HCO_3	E	20 %, 30 °C	-	HQQE
Ammonium hydroxide	NH_4OH	-	20 %, 40 °C	HQQE	-
Aviation fuel		1, 3, 4, F	100 %, 20 °C	HQBV	-
Benzoic acid	C_6H_5COOH	H	0.5 %, 20 °C	-	HQQV
Boiler water		-	< 120 °C	HQQE	-
		F	120-180 °C	-	-
Calcareous water		-	< 90 °C	HQQE	-
Calcium acetate (as coolant with inhibitor)	$Ca(CH_3COO)_2$	D, E	30 %, 50 °C	HQQE	-
Calcium hydroxide	$Ca\ (OH)_2$	E	Saturated solution, 50 °C	HQQE	-
Chloride-containing water		F	< 30 °C, maximum 500 ppm	-	HQQE
Chromic acid	H_2CrO_4	H	1 %, 20 °C	-	HQQV
Citric acid	$HOC(CH_2CO_2H)_2COOH$	H	5 %, 40 °C	-	HQQE
Completely desalinated water (demineralised water)		-	120 °C	-	HQQE
Condensate		-	120 °C	HQQE	-
Copper sulphate	$CuSO_4$	E	10 %, 50 °C	-	HQQE
Corn oil		D, E, 3	100 %, 80 °C	HQQV	-
Diesel oil		2, 3, 4, F	100 %, 20 °C	HQBV	-
Domestic hot water (potable water)		-	< 120 °C	HQQE	-
Ethanol (ethyl alcohol)	C_2H_5OH	1, F	100 %, 20 °C	HQQE	-
Ethylene glycol	$HOCH_2CH_2OH$	D, E	50 %, 50 °C	HQQE	-
Formic acid	$HCOOH$	-	5 %, 20 °C	-	HQQE
Glycerine (glycerol)	$OHCH_2CH(OH)CH_2OH$	D, E	50 %, 50 °C	HQQE	-
Hydraulic oil (mineral)		E, 2, 3	100 %, 100 °C	HQQV	-
Hydraulic oil (synthetic)		E, 2, 3	100 %, 100 °C	HQQV	-
Isopropyl alcohol	$CH_3CHOHCH_3$	1, F	100 %, 20 °C	HQQE	-
Lactic acid	$CH_3CH(OH)COOH$	E, H	10 %, 20 °C	-	HQQV
Linoleic acid	$C_{17}H_{31}COOH$	E, 3	100 %, 20 °C	HQQV	-
Methanol (methyl alcohol)	CH_3OH	1, F	100 %, 20 °C	HQQE	-
Motor oil		E, 2, 3	100 %, 80 °C	HQQV	-
Naphthalene	$C_{10}H_8$	E, H	100 %, 80 °C	HQQV	-
Nitric acid	HNO_3	F	1 %, 20 °C	-	HQQE
Oil-containing water		-	< 100 °C	HQQV	-
Olive oil		D, E, 3	100 %, 80 °C	HQQV	-
Oxalic acid	$(COOH)_2$	H	1 %, 20 °C	-	HQQE
Ozone-containing water	(O_3)	-	< 100 °C	-	HQQE
Peanut oil		D, E, 3	100 %, 80 °C	HQQV	-
Petrol		1, 3, 4, F	100 %, 20 °C	HQBV	-
Phosphoric acid	H_3PO_4	E	20 %, 20 °C	-	HQQE
Propanol	C_3H_7OH	1, F	100 %, 20 °C	HQQE	-
Propylene glycol	$CH_3CH(OH)CH_2OH$	D, E	50 %, < 90 °C	HQQE	-
Potassium carbonate	K_2CO_3	E	20 %, 50 °C	HQQE	-
Potassium formate (as coolant with inhibitor)	$KOOCH$	D, E	30 %, 50 °C	HQQE	-
Potassium hydroxide	KOH	E	20 %, 50 °C	-	HQQE
Potassium permanganate	$KMnO_4$	-	5 %, 20 °C	-	HQQE
Rape seed oil		D, E, 3	100 %, 80 °C	HQQV	-
Salicylic acid	$C_6H_4(OH)COOH$	H	0.1 %, 20 °C	-	HQQE
Silicone oil		E, 3	100 %	HQQV	-
Sodium bicarbonate	$NaHCO_3$	E	10 %, 60 °C	-	HQQE

Pumped liquid	Chemical formula	Note	Liquid concentration, liquid temperature	CRECR	CRNECRN
Sodium chloride (as coolant)	NaCl	D, E	30 %, < 5 °C, pH > 8	HQQE	-
Sodium hydroxide	NaOH	E	20 %, 50 °C	-	HQQE
Sodium hypochlorite	NaOCl	F	0.1 %, 20 °C	-	HQQV
Sodium nitrate	$NaNO_3$	E	10 %, 60 °C	-	HQQE
Sodium phosphate	Na_3PO_4	E, H	10 %, 60 °C	-	HQQE
Sodium sulphate	Na_2SO_4	E, H	10 %, 60 °C	-	HQQE
Softened water		-	< 120 °C	-	HQQE
Soya oil		D, E, 3	100 %, 80 °C	HQQV	-
Sulphuric acid	H_2SO_4	F	1 %, 20 °C	-	HQQV
Sulphurous acid	H_2SO_3	-	1 %, 20 °C	-	HQQE
Unsalted swimming-pool water		-	Approx. 2 ppm free chlorine (Cl_2)	HQQE	-

Related information

Pumped liquids

13. Accessories

Pipe connection

Various sets of counterflanges and couplings are available for pipe connection.

Counterflanges for CR

A set consists of one counterflange, one gasket, bolts and nuts.

Pump type	Description	Rated pressure	Pipe connection	Product number	Counterflange
CR 1s CR 1 CR 3 CR 5	Threaded	16 bar EN 1092-2	Rp 1	409901	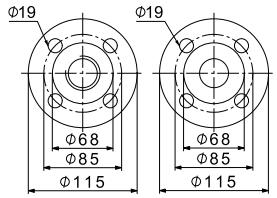 16 bar 25 bar TM050998
	For welding	25 bar EN 1092-2	25 mm, nominal	409902	
CR 1s CR 1 CR 3 CR 5	Threaded	16 bar EN 1092-2	Rp 1 1/4	419901	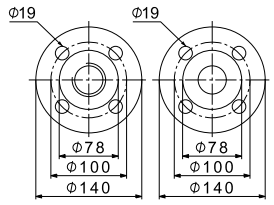 16 bar 25 bar TM051003
	For welding	25 bar EN 1092-2	32 mm, nominal	419902	
CR 10	Threaded	16 bar EN 1092-2	Rp 1 1/2	429902	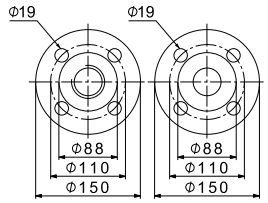 16 bar 25/40 bar TM051002
	Threaded	16 bar EN 1092-2	Rp 2	429904	
	For welding	25 bar EN 1092-2	40 mm, nominal	429901	
	For welding	40 bar special flange	50 mm, nominal	429903	
CR 15 CR 20	Threaded	16 bar EN 1092-2	Rp 2	339903	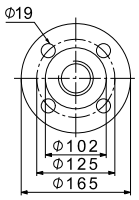 TM050999
	Threaded	16 bar special flange	Rp 2 1/2	339904	
	For welding	25 bar EN 1092-2	50 mm, nominal	339901	
	For welding	40 bar special flange	65 mm, nominal	339902	
CR 15 CR 20	Threaded	16 bar special flange	Rp 2 1/2 [37]	96509578	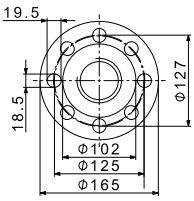 TM051005

Pump type	Description	Rated pressure	Pipe connection	Product number	Counterflange
CR 32	Threaded	16 bar EN 1092-2	Rp 2 1/2	349902	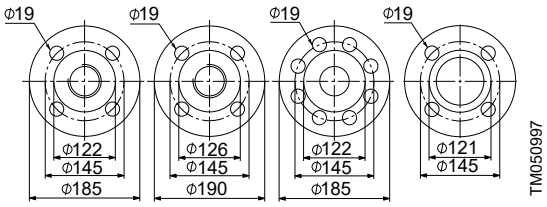 16 bar 16 bar 16/40 bar 16 bar
	Threaded	16 bar special flange	Rp 3	349901	
	For welding	16 bar EN 1092-2	65 mm, nominal	349904	
	For welding	40 bar DIN 2635	65 mm, nominal	349905	
	For welding	16 bar special flange	80 mm, nominal	349903	
CR 45	Threaded	16 bar	Rp 3	350540	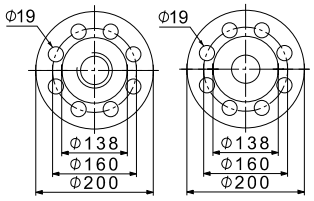 16 bar 16/40 bar
	For welding	16 bar	80 mm, nominal	350541	
	For welding	40 bar	80 mm, nominal	350542	
CR 64, 95	Threaded	16 bar EN 1092-2	Rp 4	369901	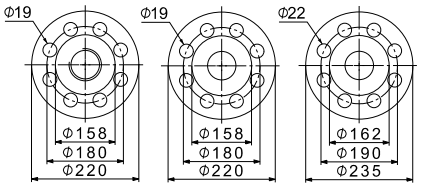 16 bar 16 bar 25 bar
	For welding	16 bar EN 1092-2	100 mm, nominal	369902	
	For welding	25 bar EN 1092-2	100 mm, nominal	369905	
CR 125 CR 155	For welding	16 bar EN 1563	150 mm, nominal	99432761	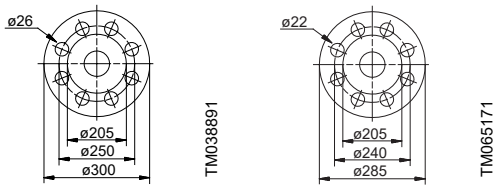 16 bar 25/40 bar
	For welding	25/40 bar EN 1563	150 mm, nominal	99432760	
CR 185 CR 215 CR 255	For welding	16 bar EN 1563	200 mm, nominal	97521270	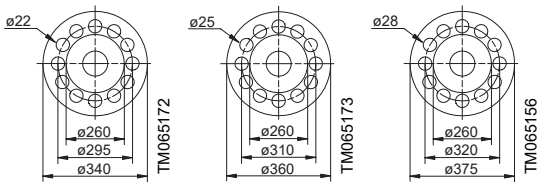 16 bar 25 bar 40 bar
	For welding	25 bar EN 1563	200 mm, nominal	97739724	
	For welding	40 bar EN 1563	200 mm, nominal	97521269	

37) Flange with 20 mm higher collar. With this collar, the installation dimensions of CR 20 will be identical to those of CR 32. If CR 32 is replaced by CR 20, the base must be raised by 15 mm.

Counterflanges for CRN

Counterflanges for CRN pumps are made of stainless steel EN 1.4401 (≈AISI 316).
A set consists of one counterflange, one gasket, bolts and nuts.

Pump type	Description	Rated pressure	Pipe connection	Product number	Counterflange
CRN 1s CRN 1 CRN 3 CRN 5	Threaded	16 bar EN 1092-1	Rp 1	405284	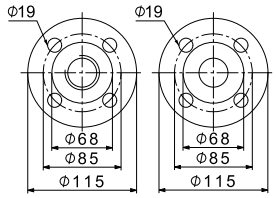 16 bar 25 bar TM050998
	For welding	25 bar EN 1092-1	25 mm, nominal	405285	
CRN 1s CRN 1 CRN 3 CRN 5	Threaded	16 bar EN 1092-1	Rp 1 1/4	415304	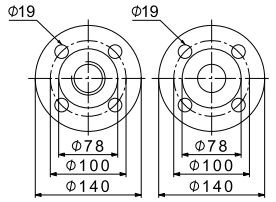 16 bar 25 bar TM051003
	For welding	25 bar EN 1092-1	32 mm, nominal	415305	
CRN 10	Threaded	16 bar EN 1092-1	Rp 1 1/2	425245	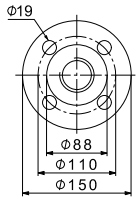 TM051001
CRN 10	Threaded	16 bar EN 1092-1	Rp 2	96509570	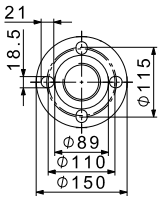 TM051006
CRN 10	For welding	25 bar EN 1092-1	40 mm, nominal	425246	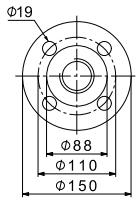 TM051001
CRN 10	For welding	25 bar special flange	50 mm, nominal	96509571	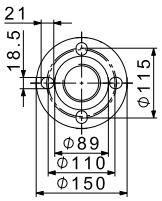 TM051006
CRN 15 CRN 20	Threaded	16 bar EN 1092-1	Rp 2	335254	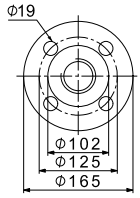 TM050999

Pump type	Description	Rated pressure	Pipe connection	Product number	Counterflange	
CRN 15 CRN 20	Threaded	16 bar special flange	Rp 2 1/2	96509575	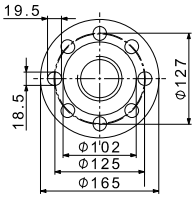	TM051005
CRN 15 CRN 20	For welding	25 bar EN 1092-1	50 mm, nominal	335255	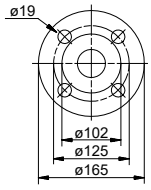	TM030402
CRN 15 CRN 20	For welding	25 bar special flange	65 mm, nominal	96509573	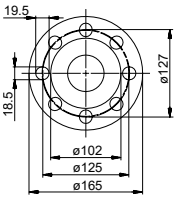	TM027203
CRN 32	Threaded	16 bar	Rp 2 1/2	349910	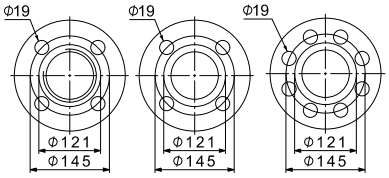 16 bar 16/40 bar 16/25 bar	TM050994
	Threaded	16 bar special flange	Rp 3	349911		
	For welding	16 bar	65 mm, nominal	349906		
	For welding	40 bar	65 mm, nominal	349908		
CRN 45	Threaded	16 bar	Rp 3	350543	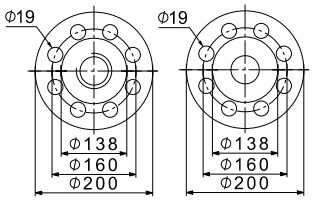 16 bar 16/40 bar	TM050996
	For welding	16 bar	80 mm, nominal	350544		
	For welding	40 bar	80 mm, nominal	350545		
CRN 64, 95	Threaded	16 bar	Rp 4	369904	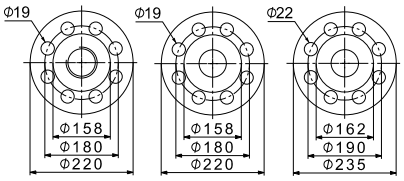 16 bar 16 bar 40 bar	TM050995
	For welding	16 bar	100 mm, nominal	369903		
	For welding	40 bar	100 mm, nominal	369906		

PJE couplings for CRN

Materials in contact with the pumped liquid are made of stainless steel EN 1.4401 (≈AISI 316) and rubber.
A set consists of two coupling halves (Victaulic type 77), one gasket, one pipe stub (for welding or threaded), bolts and nuts.

Pump type	Pipe stub	Maximum pressure [bar]	A [mm]	B [mm]	Pipe connection	Rubber parts	Number of coupling sets required	Product number	Coupling
CRN 1s CRN 1 CRN 3 CRN 5	Threaded	69	50	320	R 1 1/4	EPDM	2	419911	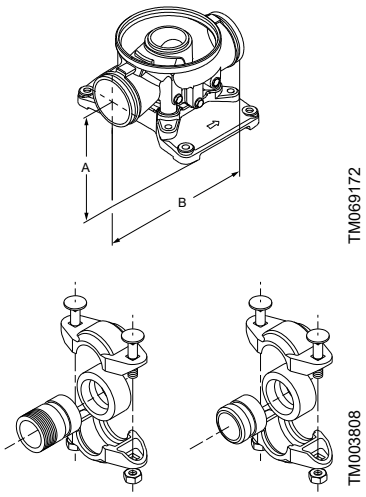
						FKM	2	419905	
	For welding	69	50	280	DN 32	EPDM	2	419912	
						FKM	2	419904	
CRN 10 CRN 15 CRN 20	Threaded	69	80	377	R 2	EPDM	2	339911	
						FKM	2	339918	
	For welding	69	80	371	DN 50	EPDM	2	339910	
						FKM	2	339917	
CRN 32	For welding	69	105	420	DN 80	EPDM	2	98144746	
						FKM	2	98144749	
CRN 45 CRN 64	For welding	69	140	465	DN 100	EPDM	2	98144752	
						FKM	2	98144755	
CRN 95	For welding	69	140	465	DN 100	EPDM	2	98144752	
						FKM	2	98144755	

FlexiClamp base connections

All sets comprise the necessary number of bolts and nuts as well as a gasket or O-ring.

Pump type	Connection	Pipe connection	PN	A [mm]	B [mm]	Rubber parts	Number of coupling sets required	Product number	Base connection
CRI, CRN 1s CRI, CRN 1 CRI, CRN 3 CRI, CRN 5	Oval (cast iron)	Rp 1	16	50	210	Klingersil	1	96449748	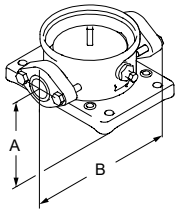 TM027368
		Rp 1 1/4	16	50	210	Klingersil	1	96449749	
	Oval (stainless steel)	Rp 1	16	50	210	Klingersil	2	96449746	
		Rp 1 1/4	16	50	210	Klingersil	2	96449747	
CRI, CRN 1s CRI, CRN 1 CRI, CRN 3 CRI, CRN 5	Union	G 2	25	50	228	EPDM	2	96449743	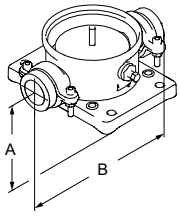 TM027369
		G 2	25	50	228	FKM	2	96449744	
CRI, CRN 1s CRI, CRN 1 CRI, CRN 3 CRI, CRN 5	DIN (stainless steel)	DN 25 DN 32	16	75	250	EPDM	2	96449745	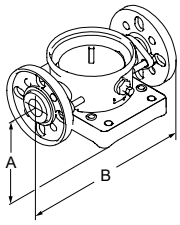 TM027370
		DN 25 DN 32	16	75	250	FKM	2	96449900	
CRI, CRN 1s CRI, CRN 1 CRI, CRN 3 CRI, CRN 5	Clamp, threaded pipe stub	Rp 1	25	50	208	EPDM	2	405280	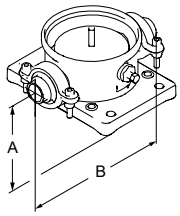 TM027371
		Rp 1	25	50	208	FKM	2	405281	
		Rp 1 1/4	25	50	208	EPDM	2	415296	
		Rp 1 1/4	25	50	208	FKM	2	415297	
		1" NPT	25	50	208	EPDM	2	405291	
		1" NPT	25	50	208	FKM	2	405292	
		1 1/4" NPT	25	50	208	EPDM	2	415311	
		1 1/4" NPT	25	50	208	FKM	2	415312	
	Clamp, pipe stub for welding	28.5	25	50	-	EPDM	2	405282	
		28.5	25	50	-	FKM	2	405283	
		37.2	25	50	-	EPDM	2	415300	
		37.2	25	50	-	FKM	2	415301	
CRI, CRN 10	Oval (cast iron)	Rp 1 1/4	16	80	260	Klingersil	2	96498775	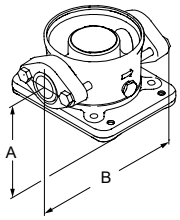 TM027372
		Rp 1 1/2	16	80	260	Klingersil	2	96498727	
		Rp 2	16	80	260	Klingersil	2	96498836	
	Oval (stainless steel)	Rp 1 1/4	16	80	260	Klingersil	2	96498776	
		Rp 1 1/2	16	80	260	Klingersil	2	96498728	
		Rp 2	16	80	260	Klingersil	2	96498835	
CRI, CRN 10	Union	G 2 3/4	25	80	288	EPDM	2	96500275	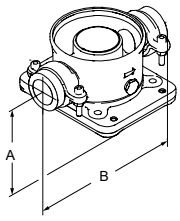 TM027374
		G 2 3/4	25	80	288	FKM	2	96500276	

Pump type	Connection	Pipe connection	PN	A [mm]	B [mm]	Rubber parts	Number of coupling sets required	Product number	Base connection
CRI, CRN 10	FGJ (cast iron)	DN 40	16	80	316	EPDM	2	96498840	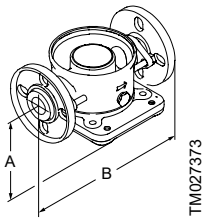
		DN 40	16	80	316	FKM	2	96500119	
	FGJ (stainless steel)	DN 40	16	80	316	EPDM	2	96500263	
		DN 40	16	80	316	FKM	2	96500264	
	FGJ (cast iron)	DN 50	16	80	316	EPDM	2	96500265	
		DN 50	16	80	316	FKM	2	96500266	
	FGJ (stainless steel)	DN 50	16	80	316	EPDM	2	96500267	
		DN 50	16	80	316	FKM	2	96500269	
CRI, CRN 10	Clamp, threaded pipe stub	Rp 1 1/2	25	80	259	EPDM	2	425238	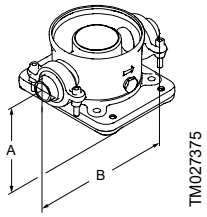
		Rp 1 1/2	25	80	259	FKM	2	425239	
		Rp 2	25	80	259	EPDM	2	335241	
		Rp 2	25	80	259	FKM	2	335242	
		Rp 2 1/2	25	80	346	EPDM	2	96508600	
		Rp 2 1/2	25	80	346	FKM	2	96508601	
	Clamp, pipe stub for welding	48.3 (DN 40)	25	80	-	EPDM	2	425242	
			25	80	-	FKM	2	425243	
		60.3 (DN 50)	25	80	-	EPDM	2	335251	
			25	80	-	FKM	2	335252	
CRI, CRN 15 CRI, CRN 20	Oval (cast iron)	Rp 1 1/4	10	90	260	Klingersil	2	96498775	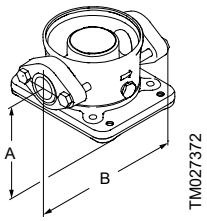
		Rp 1 1/2	10	90	260	Klingersil	2	96498727	
		Rp 2	10	90	260	Klingersil	2	96498836	
	Oval (stainless steel)	Rp 1 1/4	10	90	260	Klingersil	2	96498776	
		Rp 1 1/2	10	90	260	Klingersil	2	96498728	
		Rp 2	10	90	260	Klingersil	2	96498835	
CRI, CRN 15 CRI, CRN 20	Union	G 2 3/4	25	90	288	EPDM	2	96500275	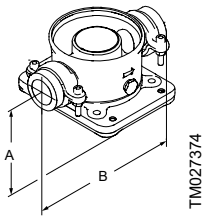
		G 2 3/4	25	90	288	FKM	2	96500276	
CRI, CRN 15 CRI, CRN 20	FGJ (cast iron)	DN 40	10	90	334	EPDM	2	96498840	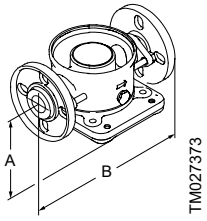
		DN 40	10	90	334	FKM	2	96500119	
	FGJ (stainless steel)	DN 40	10	90	334	EPDM	2	96500263	
		DN 40	10	90	334	FKM	2	96500264	
	FGJ (cast iron)	DN 50	10	90	334	EPDM	2	96500265	
		DN 50	10	90	334	FKM	2	96500266	
	FGJ (stainless steel)	DN 50	10	90	334	EPDM	2	96500267	
		DN 50	10	90	334	FKM	2	96500269	
CRI, CRN 15 CRI, CRN 20	Clamp, threaded pipe stub	Rp 1 1/2	25	90	259	EPDM	2	425238	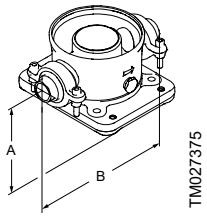
		Rp 1 1/2	25	90	259	FKM	2	425239	
		Rp 2	25	90	259	EPDM	2	335241	
		Rp 2	25	90	259	FKM	2	335242	
		Rp 2 1/2	25	90	346	EPDM	2	96508600	
		Rp 2 1/2	25	90	346	FKM	2	96508601	
	Clamp, pipe stub for welding	48.3 (DN 40)	25	90	-	EPDM	2	425242	
		48.3 (DN 40)	25	90	-	FKM	2	425243	
		60.3 (DN 50)	25	90	-	EPDM	2	335251	
		60.3 (DN 50)	25	90	-	FKM	2	335252	

LiqTec

The LiqTec dry-running protection unit protects the pump and process against dry running and temperatures exceeding 130 ± 5 °C. Connected to the motor PTC sensor, LiqTec also monitors the motor temperature.

LiqTec is prepared for DIN rail mounting in control cabinets.

Enclosure class: IPX0.

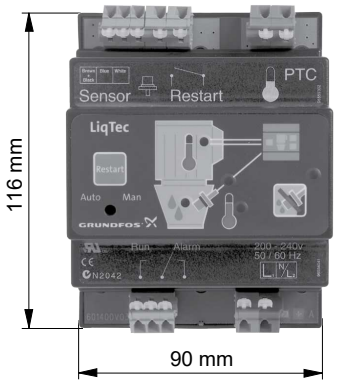

Pump type	Voltage [V]	LiqTec	Sensor 1/2"	Cable 5 m	Extension cable 15 m	Product number
CR, CRI, CRN	200-240	●	●	●	-	96556429
	80-130	●	●	●	-	96556430
	-	-	-	-	●	96443676

● Available.

- Not available.

GRUNDFOS iSOLUTIONS MONITOR

GRUNDFOS iSOLUTIONS MONITOR is a condition-monitoring solution for Grundfos CR and CRE pumps that monitors your pumps and applications for possible failures or deviation from normal (baseline) operation. The integration of condition monitoring into daily maintenance processes helps reducing unscheduled downtime and improves planning of maintenance. It also improves the overall health level of your equipment. The condition-monitoring solution provides operators with increased insights within their installation enabling more solid decisions on coming faults and consumption.

The GRUNDFOS iSOLUTIONS MONITOR solution contains the following items:

- Hardware: unit and antenna for 3G/4G
- VTU sensor with built-in ultrasonic dry-running detection, thermometer and accelerometer
- Cloud subscription based on customer needs
- Installation and commissioning services

The sensor can be integrated with a local PLC system via Modbus RTU and connected to Grundfos iSOLUTIONS CLOUD, including service and support, at the same time.

Description	Product number
GiM - Basic No CIM	99818535
GiM - CIM 500 Ethernet GIC	99818540
GiM - CIM 280 EU GSM GIC	99818537
GiM - CIM 280 US GSM GIC	99818538

CIU - Communication Interface Unit

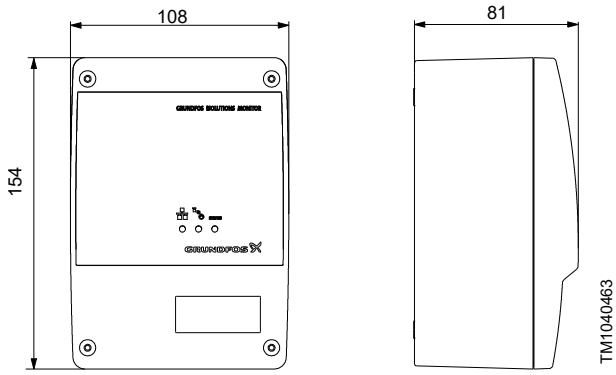

Front view (left), side view (right)

Sensor

For further information, see the *GRUNDFOS iSOLUTIONS MONITOR* data booklet available in Grundfos Product Center.

Sensors

Sensor	Type	Supplier	Measuring range	Product number
Flowmeter	SITRANS FM MAGFLO MAG 5100 W	Innomotics	1-5 m^3 (DN 25)	ID8285
	SITRANS FM MAGFLO MAG 5100 W		3-10 m^3 (DN 40)	ID8286
	SITRANS FM MAGFLO MAG 5100 W		6-30 m^3 (DN 65)	ID8287
	SITRANS FM MAGFLO MAG 5100 W		20-75 m^3 (DN 100)	ID8288
Temperature sensor	TTA (0) 25	Carlo Gavazzi	0 to 25 °C	96432591
	TTA (-25) 25		-25 to +25 °C	96430194
	TTA (50) 100		50 to 100 °C	96432592
	TTA (0) 150		0 to 150 °C	96430195
Accessory for temperature sensor (all with 1/2 RG connection)	Protecting tube ∅9 x 50 mm			96430201
	Protecting tube ∅9 x 100 mm			96430202
	Cutting ring bush			96430203
Temperature sensor, ambient temperature	WR 52	tmg DK: Plesner	-50 to +50 °C	ID8295
Differential-temperature sensor	ETSD	Honsberg	0 to 20 °C	96409362
			0 to 50 °C	96409363

Note that all sensors have 4-20 mA signal output.

Grundfos pressure sensor kits

Content	Liquid temperature	Pressure [bar]	Product number
Grundfos pressure transmitter, type ISP44, with 2.5 m cable. Connection: G 1/2 A (DIN 16288 - B6kt) Quick guide	-40 to +100 °C [38]	0-4	92618271
		0-6	92652122
		0-10	92652150
		0-16	92652152
		0-25	92618276

[38] Liquid temperature ranges from -40 to +130 °C at ambient temperatures up to 25 °C.

DPI differential-pressure sensor kit

Content	Pressure [bar]	Product number
1 sensor incl. 0.9 m screened cable (7/16" connections) 1 original DPI bracket for wall mounting 1 Grundfos bracket for mounting on motor 2 M4 screws for mounting of sensor on bracket 1 M6 screw (self-cutting) for mounting on MGE 90/100 1 M8 screw (self-cutting) for mounting on MGE 112/132 3 capillary tubes (short/long) 2 fittings (1/4" - 7/16") 5 cable clips (black) Installation and operating instructions (00480675) Service kit instructions.	0 - 0.6	96611522
	0 - 1.0	96611523
	0 - 1.6	96611524
	0 - 2.5	96611525
	0 - 4.0	96611526
	0 - 6.0	96611527
	0-10	96611550

Adapter kit

Adapter kit for sensor		
Content	**Type**	**Product number**
Adapter for sensor	G 1/2 EPDM	99352712
	G 1/2 FKM	99352737

[39] Applies to CRN 95.

14. Variants

The variants are available on request.

Although the Grundfos CR, CRI, CRN product range offers a number of pumps for different applications, customers require specific pump solutions to satisfy their needs. See the following documents:

- Grundfos CR "Custom-built pumps" data booklet
- Grundfos "CR, CRN high pressure" data booklet.

Below please find the range of options available for customising the CR pumps to meet the customers' demands.

Contact Grundfos for further information or for requests other than the ones mentioned below.

Motors

Variant	Description
ATEX-approved motor	For operation in hazardous atmospheres, explosion-proof or dust-ignition-proof motors may be required.
Motor with anti-condensation heating unit	For operation in humid environments motors with built-in anti-condensation heating unit may be required.
Motor with thermal protection	We offer motors with built-in bimetallic thermal switches or temperature-controlled PTC sensors (thermistors) incorporated in the motor windings.
Oversize motor	Ambient temperatures above 40 °C or installation at altitudes of more than 1000 metres above sea level require the use of an oversize motor (that is derating).
4-pole motor	We offer 4-pole standard motors.

Shaft seals

Variant	Description
Shaft seal with FFKM O-ring	We recommend shaft seals with FFKM or FXM O-ring for applications where the pumped liquid may damage the standard O-ring material.
Seal with flush, quench seal	We recommend this for applications involving crystallising, hardening or sticky liquids.
Air-cooled shaft seal system	We recommend this for applications involving extremely high temperatures. No conventional mechanical shaft seal can withstand liquid temperatures of up to 180 °C for any length of time. For such applications, we recommend Grundfos' unique air-cooled shaft seal system. In order to ensure a low liquid temperature around the standard shaft seal, the pump is fitted with a special air-cooled shaft seal chamber. No separate cooling is required.
Double seal with pressure chamber	We recommend this for applications involving poisonous or explosive liquids. It protects the surrounding environment and the people working in the vicinity of the pump. It consists of two seals mounted in a "back-to-back" arrangement inside a separate pressure seal chamber. As the pressure in the chamber is higher than the pump pressure, leakage is prevented. A dosing pump or a special pressure intensifier generates the seal chamber pressure.
CR MAGdrive	Magnetically driven pumps for industrial applications. Key applications are industrial processes involving the handling of aggressive, environmental, dangerous or volatile liquids, such as organic compounds and solvents.

Pumps

Variant	Description
Horizontally mounted pump	For safety or height reasons, certain applications, for instance on ships, require the pump to be mounted in horizontal position. For easy installation, the pump is fitted with brackets that support motor and pump.
Low-temperature pump	Exposed to temperatures down to -40 °C, coolant pumps may require neck rings with a different diameter in order to prevent impeller drag.
High-pressure pump up to 47 bar	For high-pressure applications, we offer a unique double pump system capable of generating a pressure of up to 47 bar.
Low-NPSH pump (improved suction)	We recommend this for boiler-feed applications where cavitation may occur due to poor inlet conditions.
Pump with bearing flange	The bearing flange is suitable for applications where the inlet pressure is higher than the maximum pressure recommended. The bearing flange increases the life of motor bearings. We recommend this for standard motors.
Belt-driven pump	Belt-driven pumps are designed to operate in places with limited space or where no electrical power is available.
Pump for pharmaceutical and biotechnological applications	CRN pumps are designed for applications requiring the sterilisation and CIP capability of pipes, valves and pumps. (CIP = clean-in-place.)

Connections and other variants

Variant	Description
Pipe connections	In addition to the wide range of standard flange connections, a 16-bar DIN standard clamping flange is available. Customised flanges are available according to specifications.
TriClamp connection	TriClamp connections are of a hygienic design with a sanitary coupling for use in the pharmaceutical and food industry.
Electropolished pump	To substantially reduce the risk of corrosion of the materials, we offer electropolished pumps. We recommend this for applications in the pharmaceutical and food industry.

15. Grundfos Product Center

Online search and sizing tool to help you make the right choice.
From the international view, you can select your specific country to view the product range available to you.
International view: *https://product-selection.grundfos.com*

All the information you need in one place

Performance curves, technical specifications, pictures, dimensional drawings, motor curves, wiring diagrams, spare parts, service kits, 3D drawings, documents, system parts. The Product Center displays any recent and saved items - including complete projects - right on the main page.

Downloads

On the product pages, you can download installation and operating instructions, data booklets, service instructions, etc., in PDF format.

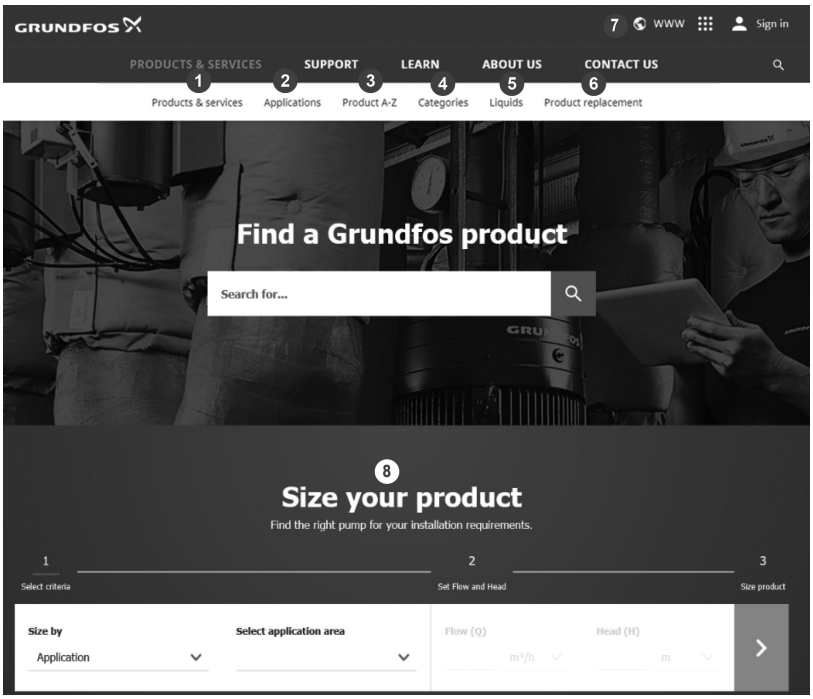

When you select your country, you will see the menus below. Note that some menus may not be available depending on the country.
Example: *https://product-selection.grundfos.com/uk*

Pos.	Description
1	**Products & services** enables you to find products and documents by typing a product number or name into the search field.
2	**Applications** enables you to choose an application to see how Grundfos can help you design and optimise your system.
3	**Products A-Z** enables you to look through a list of all the Grundfos products.
4	**Categories** enables you to look for a product category.
5	**Liquids** enables you to find pumps designed for aggressive, flammable or other special liquids.
6	**Product replacement** enables you to find a suitable replacement.
7	**WWW** enables you to select the country, which changes the language, the available product range and the structure of the website.
8	**Sizing** enables you to size a product based on your application and operating conditions.

16. Document quality feedback

FEEDBACK99301179

Click here to submit your feedback

© 2025 Grundfos Holding A/S, all rights reserved.

Trademarks displayed in this material, including but not limited to Grundfos and the Grundfos logo, are registered trademarks owned by The Grundfos Group.

99301179 **01.2025**

ECM: 1414313

GRUNDFOS Holding A/S
Poul Due Jensens Vej 7
DK-8850 Bjerringbro
Tel: +45 87 50 14 00
www.grundfos.com

GRUNDFOS