CUE

Service instructions

be
think
innovate

GRUNDFOS

Original service instructions

CONTENTS

		Page
1.	**General information**	**2**
1.1	Hazard statements	2
1.2	Notes	2
1.3	About the service instructions	3
1.4	Waiting time during power off	3
2.	**Type identification**	**4**
2.1	Nameplate	4
2.2	Enclosures	4
2.3	Schematic diagram	5
2.4	Terminals	5
3.	**Fault finding**	**7**
3.1	Safety regulations	7
3.2	Fault finding procedure	7
3.3	Operating conditions	7
3.4	Fault finding using alarm and warning codes	8
4.	**Checking the mains components**	**19**
4.1	Checking the rectifier, static test	20
4.2	Checking the IGBTs, static test	21
4.3	Checking the IGBTs, dynamic test	23
4.4	Checking the intermediate voltage	23
4.5	Checking the current sensor	24
4.6	Setting the type code	24
4.7	Fault finding using PC Tool E-Products	25
5.	**Upgrading the firmware**	**26**
6.	**Additional information**	**26**
6.1	Special service tools	26
6.2	Tightening torques	26

Read this document before starting service work on the product. Installation and service work must comply with local regulations and accepted codes of good practice.

Observe the safety instructions in the installation and operating instructions for the product.

1. General information

1.1 Hazard statements

The symbols and hazard statements below may appear in Grundfos installation and operating instructions, safety instructions and service instructions.

DANGER

Indicates a hazardous situation which, if not avoided, will result in death or serious personal injury.

WARNING

Indicates a hazardous situation which, if not avoided, could result in death or serious personal injury.

CAUTION

Indicates a hazardous situation which, if not avoided, could result in minor or moderate personal injury.

The hazard statements are structured in the following way:

SIGNAL WORD

Description of hazard

Consequence of ignoring the warning.

- Action to avoid the hazard.

1.2 Notes

The symbols and notes below may appear in Grundfos installation and operating instructions, safety instructions and service instructions.

Observe these instructions for explosion-proof products.

A blue or grey circle with a white graphical symbol indicates that an action must be taken.

A red or grey circle with a diagonal bar, possibly with a black graphical symbol, indicates that an action must not be taken or must be stopped.

If these instructions are not observed, it may result in malfunction or damage to the equipment.

Tips and advice that make the work easier.

1.3 About the service instructions

These service instructions describe the recommended procedure for fault finding of CUE and its interface.

The instructions are aimed at Grundfos service technicians that are trained as a Grundfos Service Electronic Expert (GESE). These service technicians have received electrotechnical training.

Contact your local Grundfos service centre for more information.

Usage of these instructions presuppose knowledge of these documents:

1. installation and operating instructions of CUE
2. installation and operating instructions of the system which CUE is part of or controls.

These instructions only deal with CUE and its interface. If the application includes other Grundfos products or other systems, refer to the instructions for these products.

If the fault cannot be remedied by means of these instructions, or you require technical assistance, contact Grundfos.

If it has been proven that the fault is in CUE, contact Grundfos.

Spare parts can be found in Grundfos Product Center, GPC or in GSK, Grundfos Service Knowledge.

You must state these pieces of information when you contact Grundfos to get help for fault finding:

- nameplate data of the pump or system which CUE controls or is part of
- nameplate data of CUE
- status of the indicator lights on the operating panel
- any alarm or warning text and the code number on the display.

These instructions are made public and maintained in GSK.

1.4 Waiting time during power off

Voltage	Min. waiting time		
	4 minutes	15 minutes	20 minutes
200-240 V	0.75 - 3.7 kW (1-5 hp)	5.5 - 45 kW (7.5 - 60 hp)	
380-500 V	0.55 - 7.5 kW (0.75 - 10 hp)	11-90 kW (15-125 hp)	110-250 kW (150-350 hp)
525-600 V	0.75 - 7.5 kW (1-10 hp)		
525-690 V			11-250 kW (15-350 hp)

Only wait for a shorter period of time if stated on the nameplate of the product in question.

2. Type identification

2.1 Nameplate

CUE can be identified by means of the nameplate.

TM07 5227 3519

Text	Description
T/C (type code)	CUE (product name). 202P1M2T5E20H1BXCXXXSXXXXAXBXCXXXXDX
Prod. no.	Product number: 12345678
S/N	Serial number: 123456 Place of production: G = Gråsten Date of production: 439 = week 43, 2019
1.5 kW (400 V)	Typical shaft power on the motor at 400 V
IN	Supply voltage, frequency and maximum input current
OUT	Motor voltage, frequency and maximum output current. The maximum output frequency usually depends on the pump type.
CHASSIS/IP20 Tamb.	Enclosure class. Maximum ambient temperature.

Fig. 1 Nameplate

2.2 Enclosures

The table shows the enclosures of the CUE product range. The technical information is based on the enclosure of the CUE in question.

The enclosure can be identified on the basis of typical shaft power, voltage and IP class.

Typical shaft power P_2		Enclosure										
		1 x 200-240 V			3 x 200-240 V		3 x 380-500 V		3 x 525-600 V		3 x 525-690 V	
[kW]	[hp]	IP20	IP21	IP55	IP20	IP55	IP20	IP55	IP20	IP55	IP21	IP55
0.55	0.75						A2	A5				
0.75	1				A2	A5			A3	A5		
1.1	1.5	A3		A5								
1.5	2		B1	B1								
2.2	3											
3	4				A3							
3.7	5											
4	5						A2	A5	A3	A5		
5.5	7.5		B1	B1	B3	B1	A3					
7.5	10		B2	B2								
11	15						B3	B1	B3	B1	B2	B2
15	20				B4	B2						
18.5	25					C1						
22	30				C3		B4	B2	B4	B2		
30	40											
37	50				C4	C2		C1		C1	C2	C2
45	60						C3		C3			
55	75											
75	100						C4	C2	C4	C2		
90	125											

Example

Read from the nameplate:

- Supply voltage = 3 x 380-500 V.
- Typical shaft power 1.5 kW.
- Enclosure class = IP20.

From the table it can be seen that the CUE enclosure is A2.

2.3 Schematic diagram

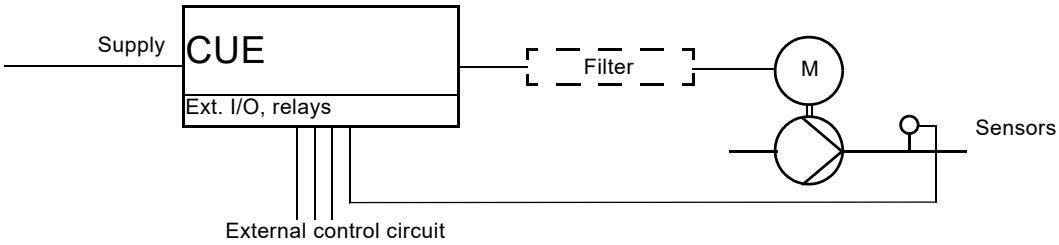

Fig. 2 Schematic diagram

2.4 Terminals

The physical position of the terminals depends on the enclosure of CUE. See the CUE installation and operating instructions.

2.4.1 Mains and motor connection

The wires in the terminal box must be as short as possible. Excepted from this is the protective earth conductor which must be so long that it is the last one to be disconnected in case the cable is inadvertently pulled out of the cable entry.

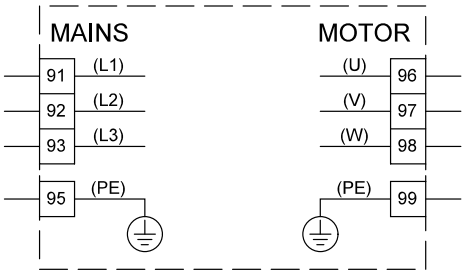

Terminal		Function
91	(L1)	Three-phase supply
92	(L2)	
93	(L3)	
95/99	(PE)	Earth connection
96	(U)	Three-phase motor connection, 0-100 % of mains voltage
97	(V)	
98	(W)	

TM03 8799 2507

Fig. 3 Wiring diagram, mains and motor terminals

2.4.2 Wiring diagram, signal terminals

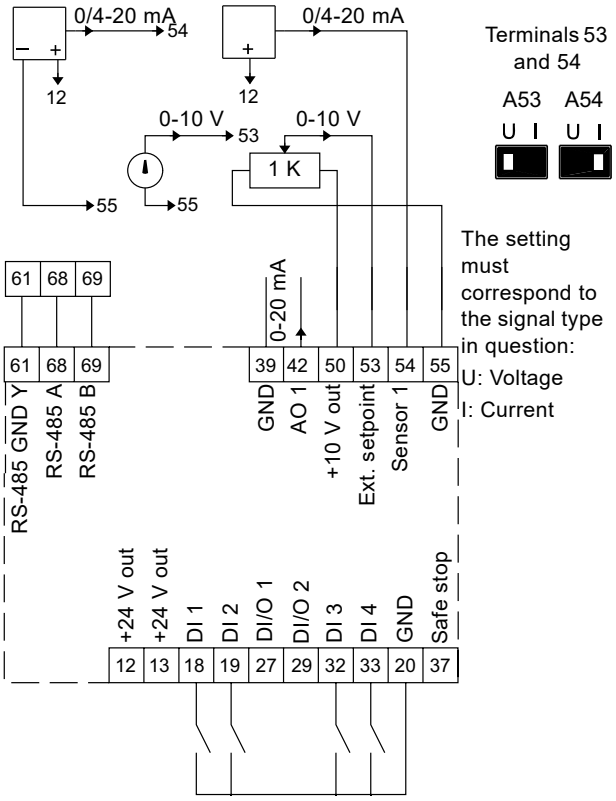

Terminal	Type	Function
12	+24 V out	Supply to sensor
13	+24 V out	Additional supply
18	DI 1	Digital input, programmable
19	DI 2	Digital input, programmable
20	GND	Common frame for digital inputs
27	DI/O 1	Digital input/output, programmable
29	DI/O 2	Digital input/output, programmable
32	DI 3	Digital input, programmable
33	DI 4	Digital input, programmable
37	Safe stop	Safe stop
39	GND	Frame for analog output
42	AO 1	Analog output, 0-20 mA
50	+10 V out	Supply to potentiometer
53	AI 1	External setpoint, 0-10 V
54	AI 2	Sensor input, sensor 1, 0/4-20 mA
55	GND	Common frame for analog inputs
61	RS-485 GND Y	GENIbus, screen (frame)
68	RS-485 A	GENIbus, signal A (+)
69	RS-485 B	GENIbus, signal B (-)

TM03 8800 3219

Fig. 4 Wiring diagram, signal terminals

2.4.3 Connection of signal relays

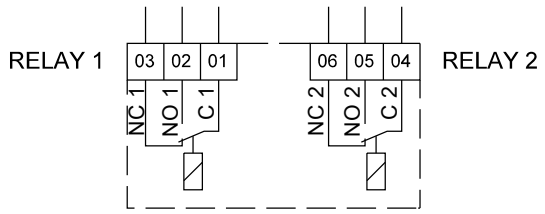

TM03 8801 2507

Terminal		Function
C 1	C 2	Common
NO 1	NO 2	Normally open contact
NC 1	NC 2	Normally closed contact

Fig. 5 Terminals for signal relays in normal state (not activated)

2.4.4 Wiring diagram, MCB 114

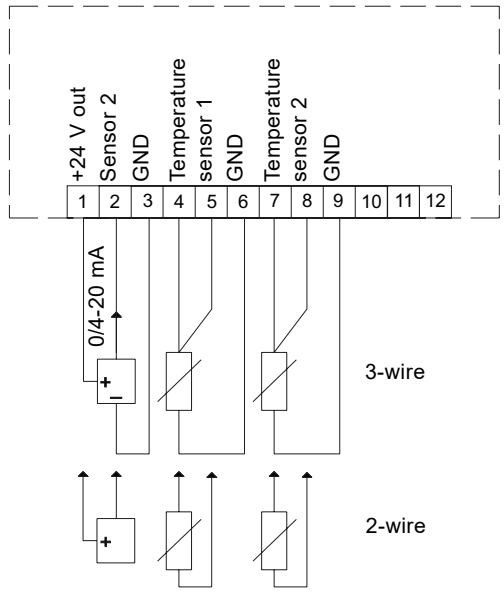

TM07 5432 4019

Terminal	Type	Function
1	+24 V out	Supply to sensor
2	AI 3	Sensor 2, 0/4-20 mA
3	GND	Common frame for analog input
4, 5	AI 4	Temperature sensor 1, Pt100/Pt1000
6	GND	Common frame for temperature sensor 1
7, 8	AI 5	Temperature sensor 2, Pt100/Pt1000
9	GND	Common frame for temperature sensor 2

Terminals 10, 11 and 12 are not used.

Fig. 6 Wiring diagram, MCB 114

3. Fault finding

The operational status of CUE and faults are automatically shown via the indicator lights and the display of the operating panel.

If the alarm light is on, the display shows a code with text which gives information of the cause. See *3.4.1 Alarm and warning list*.

3.1 Safety regulations

WARNING

Electric shock

Death or serious personal injury

- Do not use the OFF button on the operating panel as a safety switch.
- All service work must be carried out by trained persons.
- Due to the capacitors of CUE, touching the electrical parts may be fatal, even after the mains supply has been switched off.
- Switch off the mains supply, and wait at least as long as stated on the nameplate before touching electrical parts.
- Note that the relay may be connected to an external voltage supply and still be current-carrying even after the mains supply has been disconnected.

3.2 Fault finding procedure

Fault diagnosing and fault correction is based on these sections in this order:

- *3.3 Operating conditions*
- *3.4 Fault finding using alarm and warning codes*.

Startup guide

The startup guide

- is started the first time CUE is connected to supply voltage
- can be started in [Favourites] > "Q4" > "Run startup guide"
- will start if CUE is reset to the factory setting.

If CUE is in alarm state, you must carry out fault finding based on the alarm code before activating the startup guide, if necessary. An alarm may be caused by wrong settings!

Resetting to factory setting

Before resetting CUE to the factory setting, get a complete overview of the settings and possible functions required by CUE.

To reset CUE to factory setting, proceed as follows:

1. Switch off the mains supply to CUE.
2. Switch on the mains supply to CUE while you press [Status], [Main menu] and [OK] simultaneously for at least 3 seconds.

When CUE has been reset to factory setting, go through the startup guide.

Contacting Grundfos

State these pieces of information when you contact Grundfos to get help for fault finding:

- nameplate data of the pump or system which CUE controls or is part of
- nameplate data of CUE
- status of the indicator lights on the operating panel
- any alarm or warning text and the code number on the display.

3.3 Operating conditions

CUE is the controlling unit and will react and control the pump depending on the following:

Mains supply

- Check nameplate data, and measure the actual voltage supply with a voltmeter (true RMS).
- Check the earth leakage circuit breaker and the backup fuses. CUE has no internal fuses.

Pump and motor load

- Check nameplate data, and measure the actual current consumption with an amperemeter (true RMS).
  Does the pump and CUE match?

External signals, for instance from another controller

- Check that the external signals match CUE. See section *2.4.2 Wiring diagram, signal terminals* and the CUE installation and operating instructions.
- Check that terminals 18 and 20 are connected and CUE has been started via the operating panel.

Sensors connected

- Check that the sensor measuring range matches the pump application.
- Check that the settings of CUE match the sensors (current, voltage, minimum and maximum values).

Electromagnetic disturbances

- Check that the cable run is EMC-correct. See the CUE installation and operating instructions.

Startup, installation and operating settings are made via the operating panel.

- Check whether the signal indicator On on the operating panel is lit.
- Go through the startup guide at startup. If the startup guide is activated later on, the settings made will be reset. Set CUE to the correct values for the pump application. The startup guide is described in detail in the CUE installation and operating instructions.
- Check that the settings in the installation menu match the pump application. (The displays are described in detail in the CUE installation and operating instructions.)
- Check the status display of the operating panel if the pump has stopped.

If the above items are according to the CUE installation and operating instructions and the pump application, but a fault still exists, continue the fault finding in section *3.4 Fault finding using alarm and warning codes*.

3.4 Fault finding using alarm and warning codes

Besides being indicated by the indicator lights on the operating panel, faults are also shown as codes in the display.

3.4.1 Alarm and warning list

The list gives you an overview of the possible alarms and warnings and a description of the causes and suggestions for remedy.

These abbreviations are used in the column "Type":

W: Warning.

A: Alarm.

L: Locked alarm: The alarm cannot be reset until the mains supply has been switched off.

1): The action in case of alarm depends on the pump type.

Alarm code	Description	Cause	Remedy	Type
1	10 V low	The control card voltage is below 10 V from terminal 50. Remove some of the load from terminal 50, as the 10 V supply is overloaded. Maximum. 15 mA or minimum 590 Ω. This condition can be caused by a short in a connected potentiometer or improper wiring of the potentiometer.	Remove the wiring from terminal 50. If the warning clears, the problem is with the customer wiring. If the warning does not clear, replace the control card.	W
2	Live zero error	Sensor 1 (terminal 54): The analog input signal has fallen below these control values for more than 500 ms: Type: 4-20 mA: Alarm under 2 mA (reset over 3 mA). Type: 2-10 V: Alarm under 1 V (reset over 1.5 V). The types 0-20 mA and 0-10 V are not monitored.		W/A
		Fault at startup:		
		1. The setting of contact A54 for selection of signal type is incorrect.	Set the contact correctly according to section "Connection of a thermistor (PTC) to CUE" in the CUE installation and operating instructions.	
		2. The setting is incorrect for the sensor.	Correct the sensor settings.	
		3. The sensor connection is incorrect.	Connect the sensor correctly according to section "Wiring diagram, signal terminals" in the CUE installation and operating instructions.	
		Fault after startup:		
		1. Incorrect supply voltage to sensor.	Check that there are 24 ± 1 VDC between terminals 12 and 55: • If the voltage is not okay, contact Grundfos Service. • If the voltage is okay, check if there is minimum 4 mA or 1 V between terminals 54 and 55. If yes, contact Grundfos Service.	
		2. Sensor is defective or sensor cable is missing.	If the cable is missing, or the sensor is defective, contact Grundfos Service.	
3	No motor	No motor has been connected to the output of the adjustable frequency drive. This warning or alarm will only appear if programmed by the user in parameter 1-80, Function at Stop.	Check the connection between the drive and the motor.	W/A

Alarm code	Description	Cause	Remedy	Type
4	Mains phase loss	Missing phase, or the supply voltage unbalance is too high.	Re-establish the voltage supply to CUE according to the nameplate. If the fuses blow again or the alarm cannot be reset, contact Grundfos Service. • Check for unbalance between the phases by reducing the load. If the fault disappears by reducing the speed to 30 %, the cause is unbalance. • Check and tighten all supply terminals. • Contact the electricity supply authorities. CUE can operate with phase failure and unbalance up to a load of 30 to 40 %. See section *4.1 Checking the rectifier, static test*.	W/A
5	DC link voltage high	The intermediate circuit voltage (DC) is higher than the high voltage warning limit. The limit is dependent on the drive voltage rating. The adjustable frequency drive is still active.	Contact Grundfos Service.	W
6	DC link voltage low	The intermediate circuit voltage (DC) is lower than the low voltage warning limit. The limit is dependent on the drive voltage rating. The adjustable frequency drive is still active.	Contact Grundfos Service.	W
7	DC overvoltage	If the intermediate circuit voltage exceeds the limit, the adjustable frequency drive trips after a time delay.	• Enable the overvoltage control function in parameter 2-17. • Extend the ramp deceleration time in parameter 3-42. • Increase parameter "14-26 Trip Delay" at "Inverter Fault".	W/A
8	DC undervoltage	If the intermediate circuit voltage (DC) drops below the undervoltage limit, the adjustable frequency drive trips after a fixed time delay. The time delay varies with unit size.	• Check that the supply voltage matches the drive voltage. • Perform an input voltage test. • Perform a soft-charge circuit test.	W/A
9	Inverter overloaded	The adjustable frequency drive is about to cut out because of an overload (too high current for too long). The counter for electronic, thermal inverter protection gives a warning at 98 % and trips at 100 %, while giving an alarm. The adjustable frequency drive cannot be reset until the counter is below 90 %. The fault is that the adjustable frequency drive is overloaded by more than 100 % for too long.	• Compare the output current shown on the operating panel (parameter 16-14) with the drive rated current (parameter 16-36). • Display the Inverter Thermal (parameter 16-35) on the operating panel, and monitor the value. When running above the drive continuous current rating, the counter should increase. When running below the drive continuous current rating, the counter should decrease. • Set the Function at Inverter Overload in parameter "14-61" to "Derate". See the derating section in the CUE data booklet for more details if a high switching frequency is required.	W/A
10	Motor overload temperature	According to the electronic thermal protection (ETR), the motor is too hot. Select whether the adjustable frequency drive gives a warning or an alarm when the counter reaches 100 % in parameter 1-90 Motor Thermal Protection. The fault is that the motor is overloaded by more than 100 % for too long.	• Check if the motor is overheating. • Check if the motor is mechanically overloaded. • Check that the motor parameter "1-24 Motor Current" is set correctly. • Check that the motor data in parameters 1-20 through 1-25 are set correctly. • Check the setting in parameter "1-91, Motor External Fan". • Run AMA in parameter 1-29.	W/A

Alarm code	Description	Cause	Remedy	Type
11	Motor thermistor overtemp	The thermistor or the thermistor connection is disconnected. Select whether the adjustable frequency drive should give a warning or an alarm when the counter reaches 100 % in parameter 1-90 Motor Thermal Protection.	• Check if the motor is overheating. • Check if the motor is mechanically overloaded. • Make sure that the thermistor is connected correctly between terminal 53 or 54 (analog voltage input) and terminal 50 (+10 V supply), or between terminal 18 or 19 (digital input PNP only) and terminal 50. • If a KTY sensor is used, check for correct connection between terminal 54 and 55. • If using a thermal switch or thermistor, check the programming of parameter 1-93 matches sensor wiring. • If using a KTY sensor, check the programming of parameters 1-95, 1-96, and 1-97 match sensor wiring.	W/A
12	Torque limit	The torque is higher than the value in parameter "4-16 Torque Limit Motor Mode" (in motor operation), or the torque is higher than the value in parameter "4-17 Torque Limit Generator Mode" (in regenerative operation).	Parameter 14-25 can be used to change this from a warning only condition to a warning followed by an alarm.	W/A
13	Overcurrent	The inverter peak current limit, approx. 200 % of the rated current, is exceeded. The warning lasts about 1.5 sec. Then the adjustable frequency drive trips and issues an alarm. If extended mechanical brake control is selected, trip can be reset externally.	• Remove the power from the drive. • Check that the motor shaft can be turned. • Check that the motor size matches the drive. • Check that the motor data is set correctly in parameters 1-20 to 1-25.	W/A
14	Earth fault	There is a discharge from the output phases to earth, either in the cable between the adjustable frequency drive and the motor or in the motor itself.	Turn off the adjustable frequency drive and remove the earth fault. Measure the resistance to earth of the motor leads and the motor with a megohmmeter to check for earth faults in the motor. Perform current sensor test.	A
15	Hardware mismatch	A fitted option is not operational with the present control board hardware or software. Record the value of the following parameters and contact Grundfos: 15-40 FC Type 15-41 Power Section 15-42 Voltage 15-43 Software Version 15-45 Actual Type code String 15-49 SW ID Control Card 15-50 SW ID Power Card 15-60 Option Mounted (for each option slot) 15-61 Option SW Version (for each option slot)	Contact Grundfos Service.	A
16	Short circuit	There is short-circuiting in the motor or on the motor terminals.	Turn off the adjustable frequency drive and remove the short circuit.	A
17	Control word timeout	There is no communication to the adjustable frequency drive. The warning will only be active when parameter 8-04 Control Word Timeout Function is NOT set to OFF. If parameter 8-04 Control Word Timeout Function is set to Stop and Trip, a warning appears and the adjustable frequency drive ramps down until it trips, while giving an alarm.	Check the connections on the serial communication cable. Increase parameter 8-03 Control Word Timeout Time. Check the operation of the communication equipment. Verify proper installation based on EMC requirements.	W/A
18	Start failed	The speed has not been able to exceed parameter 1-77 Compressor Start Max Speed [RPM] during start within the allowed time that was set in parameter 1-79 Compressor Start Max Time to Trip.	Check that motor is not blocked.	A
21	Parameter error	The parameter is out of range. The parameter number is shown on the operating panel.	Set the affected parameter to a valid value.	W/A
23	Internal fan fault	The fan warning function is an extra protection function that checks if the fan is running/mounted. The fan warning can be disabled in parameter 14-53 Fan Monitor ([0] Disabled). For the D, E, and F Frame drives, the regulated voltage to the fans is monitored.	Check fan resistance. Check soft charge fuses.	W

Alarm code	Description	Cause	Remedy	Type
24	External fan fault	The fan warning function is an extra protection function that checks if the fan is running/mounted. The fan warning can be disabled in parameter 14-53 Fan Monitor ([0] Disabled). For the D, E, and F Frame drives, the regulated voltage to the fans is monitored.	Check fan resistance. Check soft charge fuses.	W
25	Brake resistor short circuit		Contact Grundfos Service.	W
26	Brake resistor power limit		Contact Grundfos Service.	W/A
27	Brake chopper fault		Contact Grundfos Service.	W/A
28	Brake check failed		Contact Grundfos Service.	W/A
29	Heat sink temp	The maximum temperature of the heat sink has been exceeded. The temperature fault will not be reset until the temperature falls below a defined heat sink temperature. The trip and reset points are different based on the drive power size.	• The ambient temperature too high. • Too long motor cable. • Incorrect clearance above and below the drive. • Dirty heat sink. • Blocked air flow around the drive. • Damaged heat sink fan. • For the D, E, and F Frame Drives, this alarm is based on the temperature measured by the heat sink sensor mounted inside the IGBT modules. For the F Frame drives, this alarm can also be caused by the thermal sensor in the Rectifier module. • Troubleshooting: • Check fan resistance. • Check soft charge fuses. • Check IGBT thermal sensor.	W/A
30	Motor phase U missing	Motor phase U between the adjustable frequency drive and the motor is missing.	Turn off the adjustable frequency drive and check motor phase U.	A
31	Motor phase V missing	Motor phase V between the adjustable frequency drive and the motor is missing.	Turn off the adjustable frequency drive and check motor phase V.	A
32	Motor phase W missing	Motor phase W between the adjustable frequency drive and the motor is missing.	Turn off the adjustable frequency drive and check motor phase W.	A
33	Inrush fault	Too many power-ups have occurred within a short time period.	Let unit cool to operating temperature.	A
34	Fieldbus communication fault	The serial communication bus on the communication option card is not working.	Contact Grundfos Service.	W/A
35	Option fault	An option alarm is received. The alarm is option-specific.	• Wait for 30 seconds until the drive is completely powered on. • Check the communication.	W/A
36	Mains failure	This warning/alarm is only active if the supply voltage to the adjustable frequency drive is lost and parameter "14-10 Mains Failure" is not set to OFF.	Check the fuses to the adjustable frequency drive.	W/A
38	Internal fault		• Cycle the power. • Check that the option is properly installed. • Check for loose or missing wiring. • Contact Grundfos Service.	A
39	Heat sink sensor	No feedback from the heat sink temperature sensor. The signal from the IGBT thermal sensor is not available on the power card.	• Check the ribbon cable between the power card and the gate drive card. • Check for a defective power card. • Check for a defective gate drive card.	A
40	Overload of Digital Output Terminal 27	Terminal 27 is overloaded.	Check the load connected to terminal 27, or remove short-circuit connection. Check parameter "5-00 Digital I/O Mode" and parameter "5-01 Terminal 27 Mode".	W
41	Overload of Digital Output Terminal 29	Terminal 29 is overloaded.	Check the load connected to terminal 29, or remove short-circuit connection. Check parameter "5-00 Digital I/O Mode" and parameter "5-02 Terminal 29 Mode".	W

Alarm code	Description	Cause	Remedy	Type
42	Overload of Digital Output on X30/6 or Overload of Digital Output on X30/7	For X30/6, check the load connected to X30/6 or remove short-circuit connection.	Check parameter "5-32 Term X30/6 Digi Out (MCB 101)".	W
		For X30/7, check the load connected to X30/7 or remove short-circuit connection.	Check parameter "5-33 Term X30/7 Digi Out (MCB 101)".	
45	Protective earth fault 2	Earth fault	• Check for proper earthing and loose connections. • Check for proper wire size. • Check the motor cables for short circuits or leakage currents.	A
46	Power card supply	The supply on the power card is out of range.	• Check for a defective power card. • Check for a defective control card. • Check for a defective option card. • If a 24 V DC supply is used, verify proper supply power.	A
47	24 V supply low	The supply on the power card is out of range.	Check for a defective power card.	W
48	1.8 V supply low	The 1.8 VDC supply used on the control card is outside of allowable limits. The power supply is measured on the control card.	• Check for a defective control card. • If an option card is present, check for overvoltage.	W
49	Speed limit	The speed is not within the specified range in parameter 4-11 Motor Speed Low Limit [RPM] and parameter 4-13 Motor Speed High Limit [RPM].	• Check the parameters 4-11 and 4-13. • Check the parameter 1-86.	W
50	AMA calibration failed	The AMA does not work.	Contact Grundfos Service.	A
51	AMA check U_{nom} and I_{nom}	The setting of motor voltage, motor current and motor power is presumably wrong.	Check the settings in parameters 1-20 to 1-25.	A
52	AMA low I_{nom}	The motor current is too low.	Check the settings in parameter "1-24 Motor Current".	A
53	AMA motor too big	The motor is too big for the AMA to be carried out.	Contact Grundfos Service.	A
54	AMA motor too small	The motor is too big for the AMA to be carried out.	Contact Grundfos Service.	A
55	AMA parameter out of range	The parameter values found from the motor are outside the acceptable range.	Contact Grundfos Service.	A
56	AMA interrupted by user	The AMA has been interrupted by the user.	Contact Grundfos Service.	A
57	AMA timeout	Try to start the AMA again a number of times, until the AMA is carried out. Please note that repeated runs may heat the motor to a level where the resistances R_s and R_r are increased. In most cases, however, this is not critical.	Contact Grundfos Service.	A
58	AMA internal fault	The AMA cannot be implemented.	Contact Grundfos Service.	A
59	Current limit	The current is higher than the value in parameter "4-18 Current Limit".	• Ensure that the motor data in parameters 1-20 to 1-25 is set correctly. • Increase the current limit if necessary. • Ensure that the system can operate safely at a higher limit.	W
60	External interlock	A digital input signal indicates a fault condition external to the drive. An external interlock has commanded the drive to trip.	Clear the external fault condition. To resume to normal operation, apply 24 V DC to the terminal programmed for external interlock, and reset the drive.	W
61	Feedback error	An error is detected between the calculated speed and the speed measurement from the feedback device.	• Check the settings for warning, alarm and disabling in parameter 4-30 "Motor Feedback Loss Function". • Set the tolerable error in parameter "4-31 Motor Feedback Speed Error". • Set the tolerable feedback loss time in parameter 4-32 "Motor Feedback Loss Timeout".	W/A
62	Output frequency at maximum limit	The output frequency is higher than the value set in parameter "4-19 Max Output Frequency".	• Check the application for possible causes. • Increase the output frequency limit. Ensure that the system can operate safely at a higher output frequency.	W

Alarm code	Description	Cause	Remedy	Type
64	Voltage limit	The load and speed combination demands a motor voltage higher than the actual DC link voltage.	Contact Grundfos Service.	W
65	Control Card Overtemperature	Control card overtemperature: The cut-out temperature of the control card is 80 °C (176 °F).	• Check that the ambient operating temperature is within the limits. • Check for clogged filters. • Check the fan operation. • Check the control card.	W/A
66	Heat sink temperature low	This warning is based on the temperature sensor in the IGBT module.	• The heat sink temperature measured as 0 °C (32 °F) could indicate that the temperature sensor is defective, causing the fan speed to increase to the maximum. If the sensor wire between the IGBT and the gate drive card is disconnected, this warning results. • Check the IGBT thermal sensor.	W
67	Option module configuration has changed	One or more options have either been added or removed since the last power-down.	Check that the configuration change is intentional, and reset the unit.	A
68	Safe stop activated	Safe stop has been activated. To resume normal operation, apply 24 V DC to terminal 37, then send a reset signal (via Bus, Digital I/O, or by pressing the reset key). See parameter 5-19, Terminal 37 Safe Stop.	Check the contacts and switches between terminals 12/13 and 37.	A
69	Power card temperature	The temperature sensor on the power card is either too hot or too cold.	• Check that the ambient operating temperature is within limits. • Check for clogged filters. • Check the fan operation. • Check the power card.	A
70	Illegal FC Configuration	The actual combination of control board and power board is illegal.	Contact Grundfos Service.	A
71	PTC 1 safe stop	Safe stop has been activated from the MCB 112 PTC Thermistor Card (motor too warm). Normal operation can be resumed when the MCB 112 applies 24 V DC to T-37 again (when the motor temperature reaches an acceptable level), and the digital input from the MCB 112 is deactivated. When that happens, a reset signal must be sent (via serial communication, digital I/O, or by pressing the reset button on keypad). Note that if automatic restart is enabled, the motor may start when the fault is cleared.	Contact Grundfos Service.	W/A
72	Dangerous failure	Safe stop with trip lock. Unexpected signal levels on safe stop and input from the MCB 112 PTC thermistor card.	Contact Grundfos Service.	A
73	Safe stop auto restart	The motor is safe-stopped. Note that with automatic restart enabled, the motor may start when the fault is cleared.	Check the contacts and switches between terminals 12/13 and 37.	W
76	Power unit setup	The required number of power units does not match the detected number of active power units. If the power card connection is lost, the unit also triggers this warning.	• Confirm that the spare part and its power card are the correct part number. • Ensure that the 44-pin cables between the MDCIC and power cards are mounted properly.	W
77	Reduced power mode	This warning indicates that the drive is operating in reduced power mode (meaning less than the allowed number of inverter sections). This warning is generated on power cycle when the drive is set to run with fewer inverters and will remain on.	Contact Grundfos Service.	W
79	Illegal power section configuration	The scaling card is the incorrect part number or not installed. Also MK102 connector on the power card could not be installed.	Contact Grundfos Service.	A
80	Drive initialized to default value	Parameter settings are initialised to default settings after a manual reset.	Contact Grundfos Service.	A
81	CSIV corrupt	CSIV file has syntax errors.	Contact Grundfos Service.	A
82	CSIV parameter error	CSIV failed to initialize a parameter.	Contact Grundfos Service.	A
91	Analog input 54 wrong settings	Switch S202 has to be set in position OFF (voltage input) when a KTY sensor is connected to analog input terminal 54.	Check the dip switch in the drive.	A

Alarm code	Description	Cause	Remedy	Type
92	No-flow	A no-load situation has been detected in the system.	See parameter group 22-2.	A
93	Dry pump	A no-flow situation and high speed indicates that the pump has run dry.	See parameter group 22-2.	A
94	End of curve	Feedback stays lower than the setpoint, which may indicate leakage in the pipe system.	See parameter group 22-5.	A
95	Broken belt	Torque is below the torque level set for no-load, indicating a broken belt.	See parameter group 22-6.	A
96	Start delayed	Motor start is delayed due to active short-cycle protection.	See parameter group 22-7.	A
97	Stop delayed	Stopping the motor is delayed due to active short-cycle protection.	See parameter group 22-7.	W
98	Clock fault	The time is not set or RTC clock (if mounted) has failed.	See parameter group 0-7.	W
99	Locked rotor	The rotor is blocked.	Contact Grundfos Service.	A
100	Derag limit fault	The deragging feature failed during execution.	Check the pump impeller for blockage.	A
104	Mixing fan fault	The fan is not operating. The fan monitor checks that the fan is spinning at power-up or whenever the mixing fan is turned on. The mixing-fan fault can be configured as a warning or an alarm trip in parameter "14-53 Fan Monitor".	Cycle power to the drive to determine if the warning or alarm returns.	W/A
148	System temperature	One or more of the system temperature measurements is too high.	Contact Grundfos Service.	W/A
200	Fire mode	The drive is operating in fire mode. The warning clears when fire mode is removed. Refer to the fire mode data in the alarm log.	Contact Grundfos Service.	W
201	Fire mode was active	The drive has entered fire mode. Cycle power to the unit to remove the warning. Refer to the fire mode data in the alarm log.	Contact Grundfos Service.	W
243	Brake IGBT	This alarm is only for multi-drive systems. It is equivalent to alarm 27, Brake chopper fault. • The DC fuse is blown. • The brake jumper is not in position. • The Klixon switch opened due to an overtemperature condition in the brake resistor.	The report value in the alarm log indicates which drive module generated the alarm: 1: Left drive module. 2: Second drive module from left. 3: Third drive module from left (in 4-module systems). 4: Fourth drive module from left (in 4-module systems).	A
244	Heat sink temperature	The maximum temperature of the heat sink has been exceeded. The temperature fault cannot reset until the temperature drops below a defined heat sink temperature. The trip and reset points are different based on the power size. This alarm is equivalent to alarm 29, "Heat Sink Temp".	• Check the ambient temperature, it may be too high. • Check the length of the motor cables. They may be too long. • Incorrect airflow clearance above or below the AC drive. • Check for blocked airflow around the unit. • Check to see if the heat sink fan is damaged. • Check if the heat sink is dirty.	A
245	Heat sink sensor	No feedback from the heat sink temperature sensor. The signal from the IGBT thermal sensor is not available on the power card. This alarm is equivalent to alarm 39, Heat sink sensor. The report value in the alarm log indicates which drive module generated the alarm: 1: Left drive module. 2: Second drive module from left. 3: Third drive module from left (in 4-module systems). 4: Fourth drive module from left (in 4-module systems).	Check the following: • Power card. • Gate drive card. • Ribbon cable between the power card and the gate drive card.	A

Alarm code	Description	Cause	Remedy	Type
246	Power card supply	This alarm is only for multi-drive systems. It is equivalent to alarm 46, Power card supply. The report value in the alarm log indicates which drive module generated the alarm: 1: Left drive module. 2: Second drive module from left. 3: Third drive module from left (in 4-module systems) 4: Fourth drive module from left (in 4-module systems).	Check the steps for alarm 46.	A
247	Power card temperature	This alarm is only for multi-drive systems. It is equivalent to alarm 69, Power card temperature. The report value in the alarm log indicates which drive module generated the alarm: 1: Left drive module. 2: Second drive module from left. 3: Third drive module from left (in 4-module systems). 4: Fourth drive module from left (in 4-module systems).	Check the steps for alarm 69.	A
248	Illegal power section configuration	This alarm is only for F-frame drives. It is equivalent to Alarm 79. The report value in the alarm log indicates which power module generated the alarm: 1: Left most inverter module. 2: Middle inverter module in F2 or F4 drive. 3: Right inverter module in F1 or F3 drive. 4: Right inverter module in F2 or F4 drive. 5: Rectifier module.	Check the steps for alarm 79.	A
249	Temperature of the rectifier heat sink	This alarm is only for multi-drive systems. It is equivalent to alarm 79, Illegal power section configuration. The report value in the alarm log indicates which drive module generated the alarm: 1: Left drive module. 2: Second drive module from left. 3: Third drive module from left (in 4-module systems). 4: Fourth drive module from left (in 4-module systems).	Check the steps for alarm 79.	A
250	New spare part	The power or switch mode power supply has been exchanged. The adjustable frequency drive type code must be restored in EEPROM.	Select the correct type code in parameter "14-23 Typecode Setting" according to the label on the unit. Remember to select "Save to EEPROM" to complete.	W
251	New type code	The power card or other components have been replaced and the type code has been changed.	Reset to remove the warning and to resume normal operation.	w
274	The flow is not confirmed	A signal from an external device, for example flow switch, was not received within the time specified in parameter 29-50 after start signal (startup monitoring). It could be caused by for example a defective flow switch, defective pump, closed inlet valve, no water on the inlet side.	Run the pump (carefully) in Hand mode, to see if there actually is flow in the system. Subsequently check the functionality of the flow switch.	A
275	Flow switch failure	A signal from an external device (flow switch) was not received or lost during a running condition, see parameter 29-52. It could be caused by defective flow switch, defective pump, closed inlet valve, no water on the inlet side.	Run the pump (carefully), to see if there actually is flow in the system. Subsequently check the functionality of the flow switch.	A

Alarm code	Description	Cause	Remedy	Type
2004	External fault	One of the digital inputs • DI2 (see display 3.9) • DI3 (see display 3.10) • DI4 (see display 3.11) is set to *External fault*, and the input has been or is still closed.	Check if the digital input set to *External fault* is open or closed. • If the input is closed, reset the alarm cause in the external control circuit. • If the input is open (there is no fault signal from the external control circuit): – Pull the terminal block for the external input signals out of CUE. • If the warning disappears, the fault is overload in the control circuit for the external setpoint. • If the warning does not disappear, contact Grundfos Service. See section *4.4 Checking the intermediate voltage*.	A
2007	Too high bearing temperature	The D-end motor bearing is too hot. The motor cooling is not at optimum: a) The motor is so dirty that optimum cooling cannot be achieved.	Clean the motor.	W
		b) The fan is so dirty that optimum cooling cannot be achieved.	Replace the fan.	
		c) The bearing is not lubricated correctly.	Check the lubrication of the bearing. This is the normal state if the temperature exceeds the factory setting selected for the motor.	
2008	Too high bearing temperature	The ND-end motor bearing is too hot. Motor cooling is not at optimum: a) The motor is so dirty that optimum cooling cannot be achieved.	Clean the motor.	A
		b) The fan is so dirty that optimum cooling cannot be achieved.	Replace the fan.	
		c) The bearing is not lubricated correctly.	Check the lubrication of the bearing. This is the normal state if the temperature exceeds the factory setting selected for the motor.	
2010	**Setpoint signal outside range**	External setpoint (terminal 53): The external setpoint has fallen below these control values for more than 500 ms: Type: 4-20 mA: Alarm under 2 mA (reset over 3 mA). Type: 2-10 V: Alarm under 1 V (reset over 1.5 V). The types 0-20 mA and 0-10 V are not monitored.		A
		Fault at startup:		
		a) The setting of contact A53 for selection of signal type is incorrect.	Set the contact correctly according to the settings in the CUE installation and operating instructions.	
		b) The setting in display "3.3 Ext. setpoint" is not correct for the signal in question.	Correct the sensor setting.	
		c) The connection of the external setpoint signal is incorrect.	Correct the setpoint signal.	
		d) The signal transmitter or the signal cable defective.	If the signal transmitter or cable is defective, replace the defective part.	
		Fault after startup:		
		a) Missing voltage supply to the external setpoint signal.	Check if the voltage supply is connected. See the CUE installation and operating instructions for further information.	

Alarm code	Description	Cause	Remedy	Type
2011	**Sensor 1 outside range**	Sensor 1 (terminal 54): The analog input signal has fallen below these control values for more than 500 ms: Type: 4-20 mA: Alarm under 2 mA (reset over 3 mA). Type: 2-10 V: Alarm under 1 V (reset over 1.5 V). The types 0-20 mA and 0-10 V are not monitored.		A
		Fault at startup:		
		a) No sensor is connected.	Connect a sensor according to the section "Connecting the signal terminals" in the CUE installation and operating instructions.	
		b) The setting of contact A54 for selection of signal type is incorrect.	Set the contact correctly according to the settings in the CUE installation and operating instructions.	
		3. The setting in display 3.15 is incorrect.	Correct the sensor setting.	
		c) The sensor connection is incorrect.	Connect the sensor correctly according to the section "Connecting the signal terminals" in the CUE installation and operating instructions.	
		d) The alarm is given during the startup guide if an operating mode with sensor has been selected, and no sensor is connected.	Go through the startup guide again, and select an operating mode that does not require a sensor.	
		e) Missing voltage supply to the sensor.	Check that there are 24 ± 1 V DC between terminals 12 and 55: • If the voltage is not okay, see section *4.4 Checking the intermediate voltage*. If the voltage is okay, remove the wire from terminal 55, and check that there are minimum 2 mA or 1 V between terminal 55 and the wire. If yes, see section *4.4 Checking the intermediate voltage*.	
		Fault after startup:		
		a) Sensor or sensor cable defective.	If the cable or sensor is defective, replace the defective part.	
2012	**Sensor 2 outside range**	Sensor input 2 (terminal 2 of the MCB 114) is or has been under the control value. Type: 4-20 mA: Alarm under 2 mA (reset over 3 mA).		A
		Fault at startup:		
		a) The CUE menu setting does not match the sensor type installed.	Check the setting in display "3.16 Sensor 2".	
		b) The sensor connection is incorrect.	Check the connection according to the wiring diagram for MCB 114 in the CUE installation and operating instructions.	
		c) Sensor or sensor cable defective.	If the cable or sensor is defective, replace the defective part.	
		Fault after startup:		
		a) Missing voltage supply to the sensor.	Check that there are 24 ± 1 V DC between terminals 1 and 3 of the MCB 114 • If the voltage is okay, remove the wire from terminal 2, and check that there are minimum 2 mA between terminal 3 and the wire.	

Alarm code	Description	Cause	Remedy	Type
2013	**Temperature sensor 1 outside range**	The temperature sensor connected to terminal 5 in the MCB 114 sensor input module measures a value under -50 °C or over 200 °C.		A
		a) The sensor connection is incorrect.	Check the connection according to the CUE installation and operating instructions.	
		b) The sensor is defective.	Measure the sensor resistance using an ohmmeter: • Type Pt100: If the resistance is less than 80 ohm (corresponding to -50 °C) or greater than 240 ohm (corresponding to 200 °C), the sensor is defective and must be replaced. At 20 °C, the resistance must be 107 ohm. • Type Pt1000: If the resistance is less than 800 ohm (corresponding to -50 °C) or greater than 1773 ohm (corresponding to 200 °C), the sensor is defective and must be replaced. At 20 °C, the resistance must be 1077 ohm.	
2014	**Temperature sensor 2 outside range**	The temperature sensor connected to terminal 8 in the MCB 114 sensor input module measures a value under -50 °C or over 200 °C.		A
		a) The sensor connection is incorrect.	Check the MCB 114 sensor input connection. See the CUE installation and operating instructions for further details.	
		b) The sensor is defective.	Measure the sensor resistance using an ohmmeter: • Type Pt100: If the resistance is less than 80 ohm (corresponding to -50 °C) or greater than 240 ohm (corresponding to 200 °C), the sensor is defective and must be replaced. At 20 °C, the resistance must be 107 ohm. • Type Pt1000: If the resistance is less than 800 ohm (corresponding to -50 °C) or greater than 1773 ohm (corresponding to 200 °C), the sensor is defective and must be replaced. At 20 °C, the resistance must be 1077 ohm.	
2016	**Limit 1 exceeded**	This is a monitoring function offering information, warning or alarm if a low or high limit is exceeded. The function can only be set by means of Grundfos PC Tool E-Products.	The function can be set to monitor the following: – sensor 1 or 2 – external setpoint or – temperature sensor 1 or 2. Procedure: 1. Using PC Tool E-Products, check which function is being monitored. 2. Check in the pump system whether the alarm or warning is real. If it is real, remedy the fault. 3. If the alarm or warning seems to be wrong for the pump system, troubleshoot according to the selected sensor using this manual.	W/A
2017	**Limit 2 exceeded**			

Overload alarms

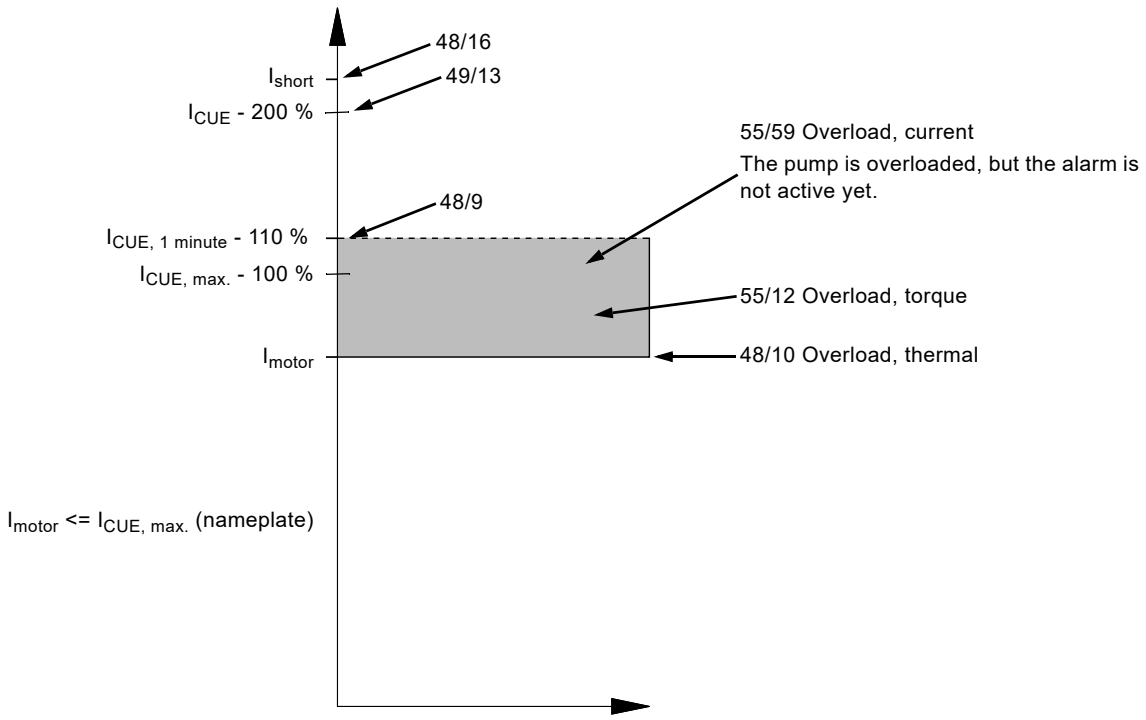

TM04 1969 1508

Fig. 7 Overload alarms

4. Checking the mains components

The check of the mains components of CUE is divided into these single procedures:

4.1 Checking the rectifier, static test
4.2 Checking the IGBTs, static test
4.3 Checking the IGBTs, dynamic test
4.4 Checking the intermediate voltage
4.5 Checking the current sensor
4.6 Setting the type code.

! If it is necessary to replace rectifiers and/or IGBTs, it is important to clean the heat sink of old cooling paste and apply an even layer of new cooling paste over the entire heat sink. Some CUE enclosures have rectifiers and IGBTs on the power board.

4.1 Checking the rectifier, static test

Always carry out the static test of the rectifier after each repair.

Before beginning the test:

1. Switch off the mains supply.
2. Remove the supply cable.
3. Set the multimeter to diode test.

The position of the terminals DC+ and DC- differs from enclosure to enclosure.

Measurement on diodes and thyristors

Note that the diodes are not fitted directly on the terminals where the measurement takes place. OL (Open Line, i.e. no connection) may therefore indicate an interruption between the terminal and diode. Check this before replacing the diode or the board where the diode is fitted.

Diode drop voltage approx. 0.4 V; < 0.3 V or > 0.5 V: Diode defective.

OL: Diode blocked = OK. Other indication: Diode defective.

OL: Thyristor blocked = OK. Other indication: Diode defective.

OL: Thyristor blocked = OK. Other indication: Diode defective.

Enclosures A2, A3, A5, B3

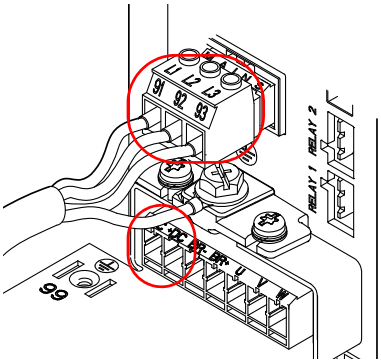

Terminals in enclosures A2 and A3 (shown with mains supply cable connected).
Enclosures A5 and B3 have similar terminals.

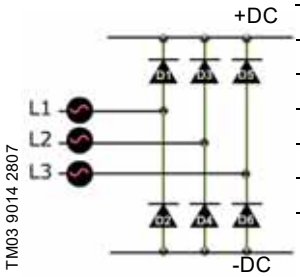

	Measurements			
	Step 1	Step 2	Step 3	Step 4
+DC	-	+		
-DC			+	-
L1	+	-	-	+
L2	+	-	-	+
L3	+	-	-	+
Indication	0.4	OL	0.4	OL

+ = positive test pin
- = negative test pin

Enclosures B1, B2

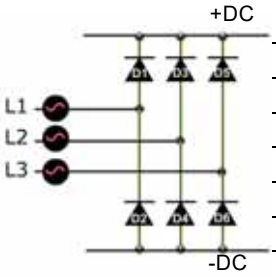

	Measurements			
	Step 1	Step 2	Step 3	Step 4
DC+	-	+		
DC-			+	-
L1	+	-	-	+
L2	+	-	-	+
L3	+	-	-	+
Indication	0.4	OL	0.4	OL

+ = positive test pin
- = negative test pin

Enclosure B4

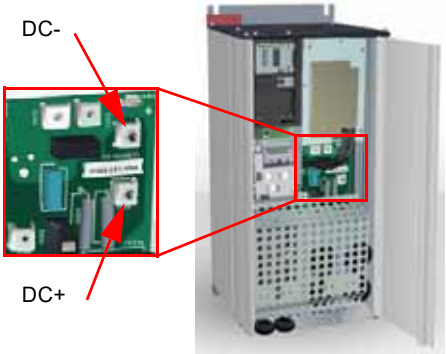

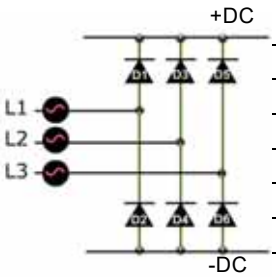

	Measurements			
	Step 1	Step 2	Step 3	Step 4
DC+	-	+		
DC-			+	-
L1	+	-	-	+
L2	+	-	-	+
L3	+	-	-	+
Indication	0.4	OL	0.4	OL

+ = positive test pin
- = negative test pin

Enclosures C1, C2

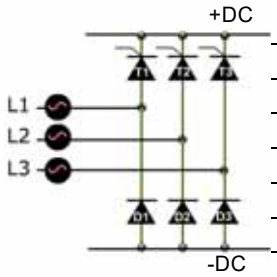

	Measurements			
	Step 1	Step 2	Step 3	Step 4
DC+	-	+		
DC-			+	-
L1	+	-	-	+
L2	+	-	-	+
L3	+	-	-	+
Indication	OL	OL	0.4	OL

+ = positive test pin
- = negative test pin

Enclosures C3, C4

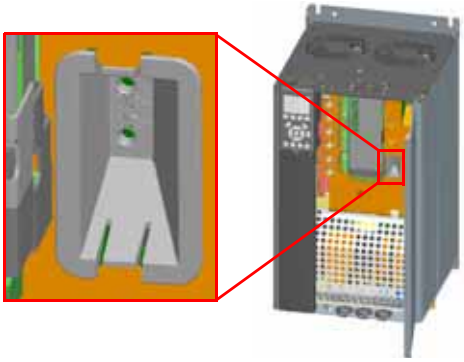

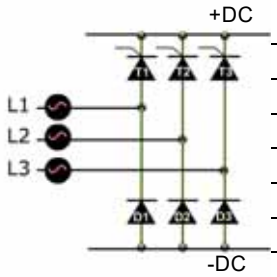

	Measurements			
	Step 1	Step 2	Step 3	Step 4
DC+	-	+		
DC-			+	-
L1	+	-	-	+
L2	+	-	-	+
L3	+	-	-	+
Indication	OL	OL	0.4	OL

+ = positive test pin
- = negative test pin

4.2 Checking the IGBTs, static test

Always carry out the static test of the IGBTs after each repair.

Before beginning the test:

1. Switch off the mains supply, and wait until the capacitors have discharged.
2. Remove the supply cable.
3. Remove the motor cable.
4. Set the multimeter to diode test.

The test shown here is actually a test of the freewheel diode of the IGBT component. If the freewheel diode is okay, it is assumed that the IGBT component is so too.

Enclosures A2, A3, A5, B3

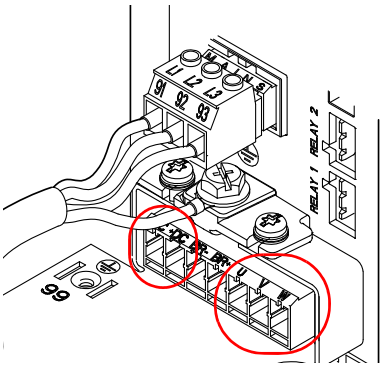

Terminals in enclosures A2 and A3 (shown with mains supply cable connected).
Enclosures A5 and B3 have similar terminals.

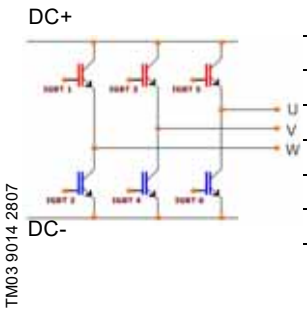

	Measurements			
	Step 1	Step 2	Step 3	Step 4
DC+	+	-		
DC-			-	+
U	-	+	+	-
V	-	+	+	-
W	-	+	+	-
Indication	OL	0.4	OL	0.4

+ = positive test pin
- = negative test pin

Enclosures B1, B2

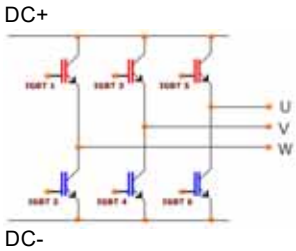

	Measurements			
	Step 1	Step 2	Step 3	Step 4
DC+	+	-		
DC-			-	+
U	-	+	+	-
V	-	+	+	-
W	-	+	+	-
Indication	OL	0.4	OL	0.4

+ = positive test pin
- = negative test pin

Enclosure B4

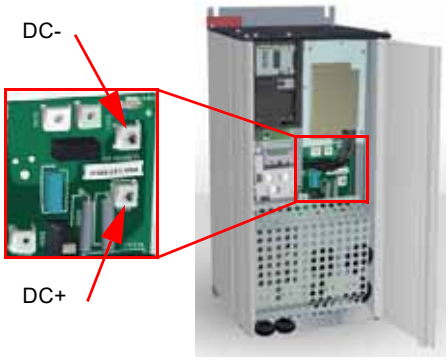

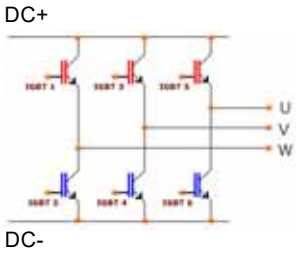

Measurements

	Step 1	Step 2	Step 3	Step 4
DC+	+	-		
DC-			-	+
U	-	+	+	-
V	-	+	+	-
W	-	+	+	-
Indication	OL	0.4	OL	0.4

+ = positive test pin
- = negative test pin

Enclosures C1, C2

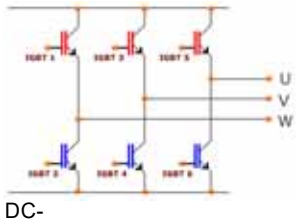

Measurements

	Step 1	Step 2	Step 3	Step 4
DC+	+	-		
DC-			-	+
U	-	+	+	-
V	-	+	+	-
W	-	+	+	-
Indication	OL	0.4	OL	0.4

+ = positive test pin
- = negative test pin

Enclosures C3, C4

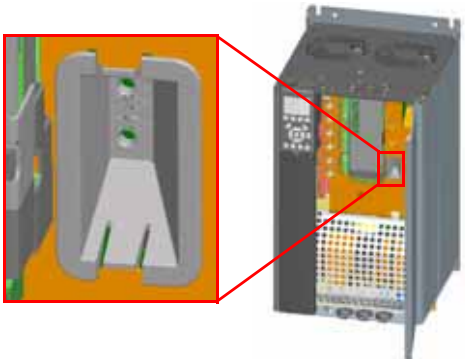

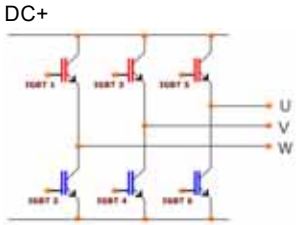

Measurements

	Step 1	Step 2	Step 3	Step 4
DC+	+	-		
DC-			-	+
U	-	+	+	-
V	-	+	+	-
W	-	+	+	-
Indication	OL	0.4	OL	0.4

+ = positive test pin
- = negative test pin

4.3 Checking the IGBTs, dynamic test

Always carry out the dynamic test of the IGBTs after each repair.

Before beginning the test:

1. Remove the motor cable.
2. Set the multimeter to 1000 VAC.
3. Switch on the mains supply.
4. Set CUE to a frequency of 50 Hz.
5. Switch on CUE.

Enclosure A

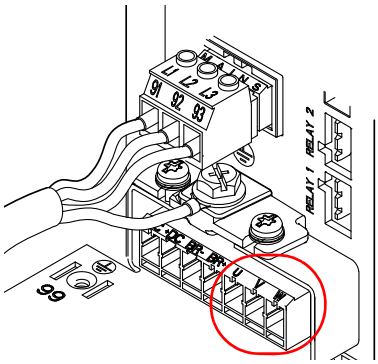

TM03 9014 2807

Terminals in enclosures A2 and A3 (shown with mains supply cable connected).
Enclosure A5 has similar terminals.

Measure voltages:

- between terminals U and V
- between terminals V and W
- between terminals U and W.

The voltages measured must be 360-380 V and may deviate from each other by ± 1.5 %.
If the measurements deviate by more than ± 1.5 %, an IGBT is defective, and the power board must be replaced.

Enclosure B

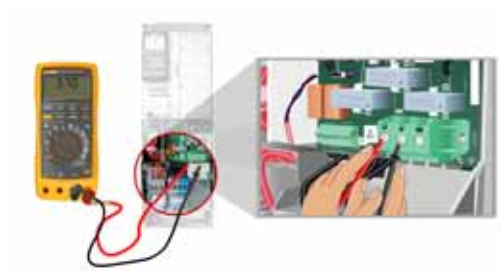

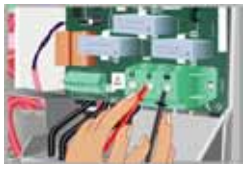

The voltages measured must be 360-380 V and may deviate from each other by ± 1.5 %.
If the measurements deviate by more than ± 1.5 %, an IGBT is defective, and the power board must be replaced.

Enclosure C

The voltages measured will be 450 ± 25 V when CUE is set to 50 Hz/ 1500 rpm and connected to a 400 V voltage supply.
If the measurements deviate by more than ± 1.5 %, an IGBT is defective, and the power board must be replaced.

4.4 Checking the intermediate voltage

The intermediate voltage must be approx. 1.38 × mains voltage (VAC).

Alarm/warning limits			
Voltage supply	**3 x 200-240 V**	**3 x 380-500 V**	**3 x 525-600 V**
Overvoltage	410 VDC	855 VDC	975 VDC
Voltage warning high	390 VDC	810 VDC	943 VDC
Voltage warning low	205 VDC	410 VDC	585 VDC
Undervoltage	185 VDC	373 VDC	532 VDC

4.5 Checking the current sensor

A defective current sensor sometimes shows itself as an earth fault alarm which cannot be reset even when the motor cable has been disconnected.

Testing the current sensor

1. Disconnect the motor cable from the terminals of CUE.
2. Switch on CUE.
3. Check the reading of the input power (display 2.7).
4. If the display shows another value than 0 W or if the earth fault alarm does not disappear if the motor cable is removed, the fault causes are:
   - Type code has not been set. See section *4.6 Setting the type code*.
   - Defective current sensor.

   Physical position of the current sensor:
   – Enclosures B1, C3, C4**:** On the power board.
   – Enclosures B2, B3, B4**:** On the SMSP board.
   – Enclosures C1, C2**:** On the current sensor board.

4.6 Setting the type code

If the power and/or SMPS board has been replaced, the CUE type code must be set. The setting can be carried out by means of the operating panel or PC Tool E-Products. The correct type code is on the CUE nameplate.

1. Enter the value 00006100hex in parameter "14-29 Service Code".
2. Enter parameter "14-23 Type code Setting" to access the settings.
3. Select indexes [00] to [19] and enter values according to the new type code.
4. Select index [20] and select "Save to EEPROM".
5. Alarm 251 "New Type code" appears on the display and the drive is in trip locked state.
6. Power cycle the drive and reset the alarm.

4.7 Fault finding using PC Tool E-Products

In addition to the indicator lights on the operating panel, the fault cause can be read via an alarm code on the display or in PC Tool E-Products.

4.7.1 PC Tool E-products

PC Tool E-products is a software tool enabling communication with GENIbus products from a computer running Microsoft® Windows®.

Among other things, PC Tool E-Products can be used for fault finding of E-products, including CUE.

Acquisition of PC Tool E-Products

PC Tool E-products can be acquired from GTI, which is a Lotus® Notes® database.

Connecting the computer to CUE using PC Tool Link

A Grundfos PC Tool Link is used for the physical connection between the computer and CUE. It converts RS485 used by CUE into USB used by the PC. PC Tool Link also gives a galvanic separation between CUE and the computer.

Fig. 8 Connecting the computer to CUE using PC Tool Link (USB)

Connect the RS485 cable to terminals 61, 68 and 69 in CUE (terminal block pos. 2 in fig. 9).

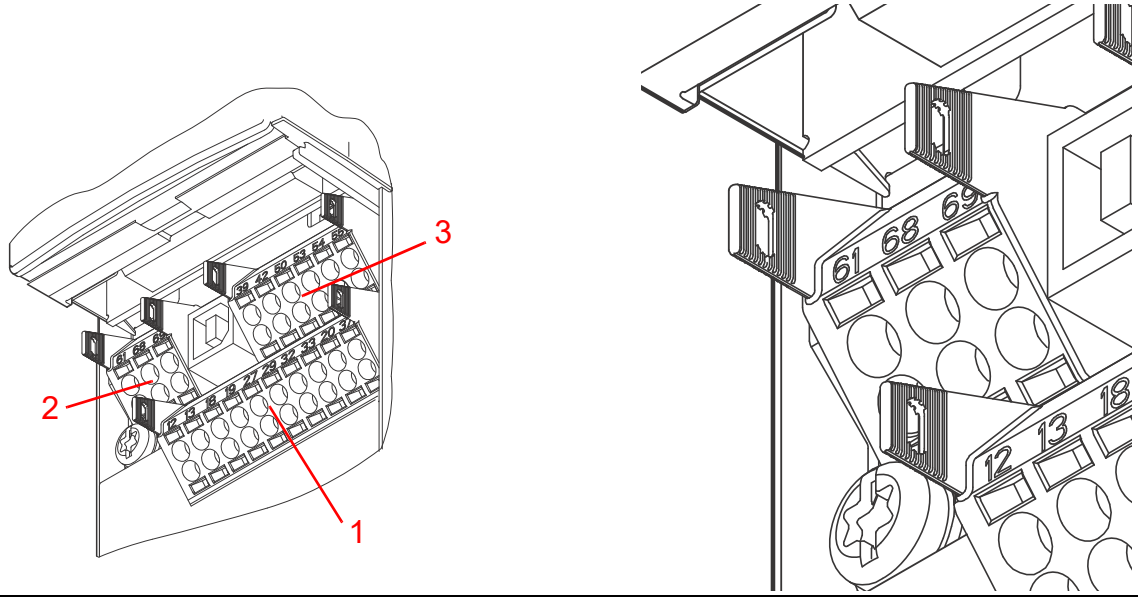

1: 10-pole terminal block, digital I/O
2: 3-pole terminal block, RS485 bus
3: 6-pole terminal block, analog I/O

3-pole terminal block, RS485 bus
61: GENIbus Y
68: GENIbus A
69: GENIbus B

Fig. 9 Signal terminals

5. Upgrading the firmware

The firmware package is downloaded from Grundfos Technical Information found on Insite under "Toolbox".

1. Go to Grundfos Insite and select "Toolbox".
2. Select "GTI - Grundfos Technical information".
3. Select "Service Support Tools".
4. Select the CUE firmware.
5. Copy the files to a USB stick.

6. Additional information

6.1 Special service tools

A	B	C
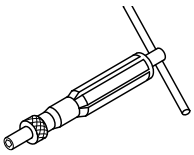		

Pos.	Description	Further information	Part number
A	Torque screwdriver	0.5 - 4.0 Nm	SV0435
B	Digital multimeter, type RMS, CAT III / 1000 V, (KAT III/1200 V for 400/690 V), with diode testing function		
C	Clip-on amperemeter		

6.2 Tightening torques

Tightening torques for terminals

Enclosure	Tightening torque [Nm]			
	Mains	Motor	Earth	Relay
	91, 92, 93	96, 97, 98	95, 99	01-06
A2	1.8	1.8	3	0.6
A3	1.8	1.8	3	0.6
A5	1.8	1.8	3	0.6
B1	1.8	1.8	3	0.6
B2	4.5	4.5	3	0.6
B3	1.8	1.8	3	0.6
B4	4.5	4.5	3	0.6
C1	10	10	3	0.6
C2	14[1] / 24[2]	14[1] / 24[2]	3	0.6
C3	10	10	3	0.6
C4	14[1] / 24[2]	14[1] / 24[2]	3	0.6

[1] Conductor cross-section ≤ 95 mm^2.

[2] Conductor cross-section ≥ 95 mm^2.

1. Alarm code 38 Internal fault

In case of alarm code 38, an additional code can be read via PC Tool E-Products. Inform Grundfos Service for a detailed fault remedy.

Alarm code	Description
0	The serial port cannot be initialized. Serious hardware failure.
256	The power EEPROM data is defect or too old.
512	The control board EEPROM data is defect or too old.
513	Communication timeout reading EEPROM data.
514	Communication timeout reading EEPROM data.
515	The Application Orientated Control cannot recognize the EEPROM data.
516	Cannot write to the EEPROM because a write command is on progress.
517	The write command is under timeout.
518	Failure in the EEPROM.
519	Missing or invalid BarCode data in EEPROM 1024 – 1279 CAN telegram cannot be sent. (1027 indicates a possible hardware failure.)
1281	Digital Signal Processor flash timeout.
1282	Power micro software version mismatch.
1283	Power EEPROM data version mismatch.
1284	Cannot read Digital Signal Processor software version.
1299	Option SW in slot A is too old.
1300	Option SW in slot B is too old.
1311	Option SW in slot C0 is too old.
1312	Option SW in slot C1 is too old.
1315	Option SW in slot A is not supported (not allowed).
1316	Option SW in slot B is not supported (not allowed).
1317	Option SW in slot C0 is not supported (not allowed).
1318	Option SW in slot C1 is not supported (not allowed).
1536	An exception in the Application Orientated Control is registered. Debug information written in LCP.
1792	DSP watchdog is active. Debugging of power part data Motor Orientated Control data not transferred correctly.
2049	Power data restarted.
2315	Missing SW version from power unit.
2816	Stack overflow Control board module.
2817	Scheduler slow tasks.
2818	Fast tasks.
2819	Parameter thread.
2820	LCP stack overflow.
2821	Serial port overflow.
2822	USB port overflow.
3072-5122	Parameter value outside its limits. Perform an initialization. Parameter number causing the alarm: Subtract the code from 3072. Ex Error code 3238: 3238-3072 = 166 is outside the limit.
5123	Option in slot A: Hardware incompatible with Control board hardware.
5124	Option in slot B: Hardware incompatible with Control board hardware.
5125	Option in slot C0: Hardware incompatible with Control board hardware.
5126	Option in slot C1: Hardware incompatible with Control board hardware.
5376-6231	Out of memory.

Argentina
Bombas GRUNDFOS de Argentina S.A.
Ruta Panamericana km. 37.500 Centro Industrial Garin
1619 Garín Pcia. de B.A.
Phone: +54-3327 414 444
Telefax: +54-3327 45 3190

Australia
GRUNDFOS Pumps Pty. Ltd.
P.O. Box 2040
Regency Park
South Australia 5942
Phone: +61-8-8461-4611
Telefax: +61-8-8340 0155

Austria
GRUNDFOS Pumpen Vertrieb Ges.m.b.H.
Grundfosstraße 2
A-5082 Grödig/Salzburg
Tel.: +43-6246-883-0
Telefax: +43-6246-883-30

Belgium
N.V. GRUNDFOS Bellux S.A.
Boomsesteenweg 81-83
B-2630 Aartselaar
Tél.: +32-3-870 7300
Télécopie: +32-3-870 7301

Belarus
Представительство ГРУНДФОС в Минске
220125, Минск
ул. Шафарнянская, 11, оф. 56, БЦ «Порт»
Тел.: +7 (375 17) 286 39 72/73
Факс: +7 (375 17) 286 39 71
E-mail: minsk@grundfos.com

Bosnia and Herzegovina
GRUNDFOS Sarajevo
Zmaja od Bosne 7-7A,
BH-71000 Sarajevo
Phone: +387 33 592 480
Telefax: +387 33 590 465
www.ba.grundfos.com
e-mail: grundfos@bih.net.ba

Brazil
BOMBAS GRUNDFOS DO BRASIL
Av. Humberto de Alencar Castelo Branco, 630
CEP 09850 - 300
São Bernardo do Campo - SP
Phone: +55-11 4393 5533
Telefax: +55-11 4343 5015

Bulgaria
Grundfos Bulgaria EOOD
Slatina District
Iztochna Tangenta street no. 100
BG - 1592 Sofia
Tel. +359 2 49 22 200
Fax. +359 2 49 22 201
email: bulgaria@grundfos.bg

Canada
GRUNDFOS Canada Inc.
2941 Brighton Road
Oakville, Ontario
L6H 6C9
Phone: +1-905 829 9533
Telefax: +1-905 829 9512

China
GRUNDFOS Pumps (Shanghai) Co. Ltd.
10F The Hub, No. 33 Suhong Road
Minhang District
Shanghai 201106
PRC
Phone: +86 21 612 252 22
Telefax: +86 21 612 253 33

COLOMBIA
GRUNDFOS Colombia S.A.S.
Km 1.5 vía Siberia-Cota Conj. Potrero Chico,
Parque Empresarial Arcos de Cota Bod. 1A.
Cota, Cundinamarca
Phone: +57(1)-2913444
Telefax: +57(1)-8764586

Croatia
GRUNDFOS CROATIA d.o.o.
Buzinski prilaz 38, Buzin
HR-10010 Zagreb
Phone: +385 1 6595 400
Telefax: +385 1 6595 499
www.hr.grundfos.com

GRUNDFOS Sales Czechia and Slovakia s.r.o.
Čajkovského 21
779 00 Olomouc
Phone: +420-585-716 111

Denmark
GRUNDFOS DK A/S
Martin Bachs Vej 3
DK-8850 Bjerringbro
Tlf.: +45-87 50 50 50
Telefax: +45-87 50 51 51
E-mail: info_GDK@grundfos.com
www.grundfos.com/DK

Estonia
GRUNDFOS Pumps Eesti OÜ
Peterburi tee 92G
11415 Tallinn
Tel: + 372 606 1690
Fax: + 372 606 1691

Finland
OY GRUNDFOS Pumput AB
Trukkikuja 1
FI-01360 Vantaa
Phone: +358-(0) 207 889 500

France
Pompes GRUNDFOS Distribution S.A.
Parc d'Activités de Chesnes
57, rue de Malacombe
F-38290 St. Quentin Fallavier (Lyon)
Tél.: +33-4 74 82 15 15
Télécopie: +33-4 74 94 10 51

Germany
GRUNDFOS GMBH
Schlüterstr. 33
40699 Erkrath
Tel.: +49-(0) 211 929 69-0
Telefax: +49-(0) 211 929 69-3799
e-mail: infoservice@grundfos.de
Service in Deutschland:
e-mail: kundendienst@grundfos.de

Greece
GRUNDFOS Hellas A.E.B.E.
20th km. Athinon-Markopoulou Av.
P.O. Box 71
GR-19002 Peania
Phone: +0030-210-66 83 400
Telefax: +0030-210-66 46 273

Hong Kong
GRUNDFOS Pumps (Hong Kong) Ltd.
Unit 1, Ground floor
Siu Wai Industrial Centre
29-33 Wing Hong Street &
68 King Lam Street, Cheung Sha Wan
Kowloon
Phone: +852-27861706 / 27861741
Telefax: +852-27858664

Hungary
GRUNDFOS Hungária Kft.
Tópark u. 8
H-2045 Törökbálint,
Phone: +36-23 511 110
Telefax: +36-23 511 111

India
GRUNDFOS Pumps India Private Limited
118 Old Mahabalipuram Road
Thoraipakkam
Chennai 600 096
Phone: +91-44 2496 6800

Indonesia
PT. GRUNDFOS POMPA
Graha Intirub Lt. 2 & 3
Jln. Cililitan Besar No.454. Makasar, Jakarta Timur
ID-Jakarta 13650
Phone: +62 21-469-51900
Telefax: +62 21-460 6910 / 460 6901

Ireland
GRUNDFOS (Ireland) Ltd.
Unit A, Merrywell Business Park
Ballymount Road Lower
Dublin 12
Phone: +353-1-4089 800
Telefax: +353-1-4089 830

Italy
GRUNDFOS Pompe Italia S.r.l.
Via Gran Sasso 4
I-20060 Truccazzano (Milano)
Tel.: +39-02-95838112
Telefax: +39-02-95309290 / 95838461

Japan
GRUNDFOS Pumps K.K.
1-2-3, Shin-Miyakoda, Kita-ku, Hamamatsu
431-2103 Japan
Phone: +81 53 428 4760
Telefax: +81 53 428 5005

Korea
GRUNDFOS Pumps Korea Ltd.
6th Floor, Aju Building 679-5
Yeoksam-dong, Kangnam-ku, 135-916
Seoul, Korea
Phone: +82-2-5317 600
Telefax: +82-2-5633 725

Latvia
SIA GRUNDFOS Pumps Latvia
Deglava biznesa centrs
Augusta Deglava ielā 60, LV-1035, Rīga,
Tālr.: + 371 714 9640, 7 149 641
Fakss: + 371 914 9646

Lithuania
GRUNDFOS Pumps UAB
Smolensko g. 6
LT-03201 Vilnius
Tel: + 370 52 395 430
Fax: + 370 52 395 431

Malaysia
GRUNDFOS Pumps Sdn. Bhd.
7 Jalan Peguam U1/25
Glenmarie Industrial Park
40150 Shah Alam
Selangor
Phone: +60-3-5569 2922
Telefax: +60-3-5569 2866

Mexico
Bombas GRUNDFOS de México S.A. de C.V.
Boulevard TLC No. 15
Parque Industrial Stiva Aeropuerto
Apodaca, N.L. 66600
Phone: +52-81-8144 4000
Telefax: +52-81-8144 4010

Netherlands
GRUNDFOS Netherlands
Veluwezoom 35
1326 AE Almere
Postbus 22015
1302 CA ALMERE
Tel.: +31-88-478 6336
Telefax: +31-88-478 6332
E-mail: info_gnl@grundfos.com

New Zealand
GRUNDFOS Pumps NZ Ltd.
17 Beatrice Tinsley Crescent
North Harbour Industrial Estate
Albany, Auckland
Phone: +64-9-415 3240
Telefax: +64-9-415 3250

Norway
GRUNDFOS Pumper A/S
Strømsveien 344
Postboks 235, Leirdal
N-1011 Oslo
Tlf.: +47-22 90 47 00
Telefax: +47-22 32 21 50

Poland
GRUNDFOS Pompy Sp. z o.o.
ul. Klonowa 23
Baranowo k. Poznania
PL-62-081 Przeźmierowo
Tel: (+48-61) 650 13 00
Fax: (+48-61) 650 13 50

Portugal
Bombas GRUNDFOS Portugal, S.A.
Rua Calvet de Magalhães, 241
Apartado 1079
P-2770-153 Paço de Arcos
Tel.: +351-21-440 76 00
Telefax: +351-21-440 76 90

Romania
GRUNDFOS Pompe România SRL
Bd. Biruintei, nr 103
Pantelimon county Ilfov
Phone: +40 21 200 4100
Telefax: +40 21 200 4101
E-mail: romania@grundfos.ro

Russia
ООО Грундфос Россия
ул. Школьная, 39-41
Москва, RU-109544, Russia
Тел. (+7) 495 564-88-00 (495) 737-30-00
Факс (+7) 495 564 8811
E-mail grundfos.moscow@grundfos.com

Serbia
Grundfos Srbija d.o.o.
Omladinskih brigada 90b
11070 Novi Beograd
Phone: +381 11 2258 740
Telefax: +381 11 2281 769
www.rs.grundfos.com

Singapore
GRUNDFOS (Singapore) Pte. Ltd.
25 Jalan Tukang
Singapore 619264
Phone: +65-6681 9688
Telefax: +65-6681 9689

Slovakia
GRUNDFOS s.r.o.
Prievozská 4D
821 09 BRATISLAVA
Phona: +421 2 5020 1426
sk.grundfos.com

Slovenia
GRUNDFOS LJUBLJANA, d.o.o.
Leskoškova 9e, 1122 Ljubljana
Phone: +386 (0) 1 568 06 10
Telefax: +386 (0)1 568 06 19
E-mail: tehnika-si@grundfos.com

South Africa
Grundfos (PTY) Ltd.
16 Lascelles Drive, Meadowbrook Estate
1609 Germiston, Johannesburg
Tel.: (+27) 10 248 6000
Fax: (+27) 10 248 6002
E-mail: lgradidge@grundfos.com

Spain
Bombas GRUNDFOS España S.A.
Camino de la Fuentecilla, s/n
E-28110 Algete (Madrid)
Tel.: +34-91-848 8800
Telefax: +34-91-628 0465

Sweden
GRUNDFOS AB
Box 333 (Lunnagårdsgatan 6)
431 24 Mölndal
Tel.: +46 31 332 23 000
Telefax: +46 31 331 94 60

Switzerland
GRUNDFOS Pumpen AG
Bruggacherstrasse 10
CH-8117 Fällanden/ZH
Tel.: +41-44-806 8111
Telefax: +41-44-806 8115

Taiwan
GRUNDFOS Pumps (Taiwan) Ltd.
7 Floor, 219 Min-Chuan Road
Taichung, Taiwan, R.O.C.
Phone: +886-4-2305 0868
Telefax: +886-4-2305 0878

Thailand
GRUNDFOS (Thailand) Ltd.
92 Chaloem Phrakiat Rama 9 Road,
Dokmai, Pravej, Bangkok 10250
Phone: +66-2-725 8999
Telefax: +66-2-725 8998

Turkey
GRUNDFOS POMPA San. ve Tic. Ltd. Sti.
Gebze Organize Sanayi Bölgesi
Ihsan dede Caddesi,
2. yol 200. Sokak No. 204
41490 Gebze/ Kocaeli
Phone: +90 - 262-679 7979
Telefax: +90 - 262-679 7905
E-mail: satis@grundfos.com

Ukraine
Бізнес Центр Європа
Столичне шосе, 103
м. Київ, 03131, Україна
Телефон: (+38 044) 237 04 00
Факс.: (+38 044) 237 04 01
E-mail: ukraine@grundfos.com

United Arab Emirates
GRUNDFOS Gulf Distribution
P.O. Box 16768
Jebel Ali Free Zone
Dubai
Phone: +971 4 8815 166
Telefax: +971 4 8815 136

United Kingdom
GRUNDFOS Pumps Ltd.
Grovebury Road
Leighton Buzzard/Beds. LU7 4TL
Phone: +44-1525-850000
Telefax: +44-1525-850011

U.S.A.
GRUNDFOS Pumps Corporation
9300 Loiret Blvd.
Lenexa, Kansas 66219
Phone: +1-913-227-3400
Telefax: +1-913-227-3500

Uzbekistan
Grundfos Tashkent, Uzbekistan The Representative Office of Grundfos Kazakhstan in Uzbekistan
38a, Oybek street, Tashkent
Телефон: (+998) 71 150 3290 / 71 150 3291
Факс: (+998) 71 150 3292

Addresses Revised 15.01.2019

Trademarks displayed in this material, including but not limited to Grundfos, the Grundfos logo and "be think innovate" are registered trademarks owned by The Grundfos Group. All rights reserved. © 2019 Grundfos Holding A/S, all rights reserved.

96765701 1019
ECM: 1272347